501 Charmany Drive
Contract 8166
MUNIS 11847
Developer: University Research Park, Incorporated

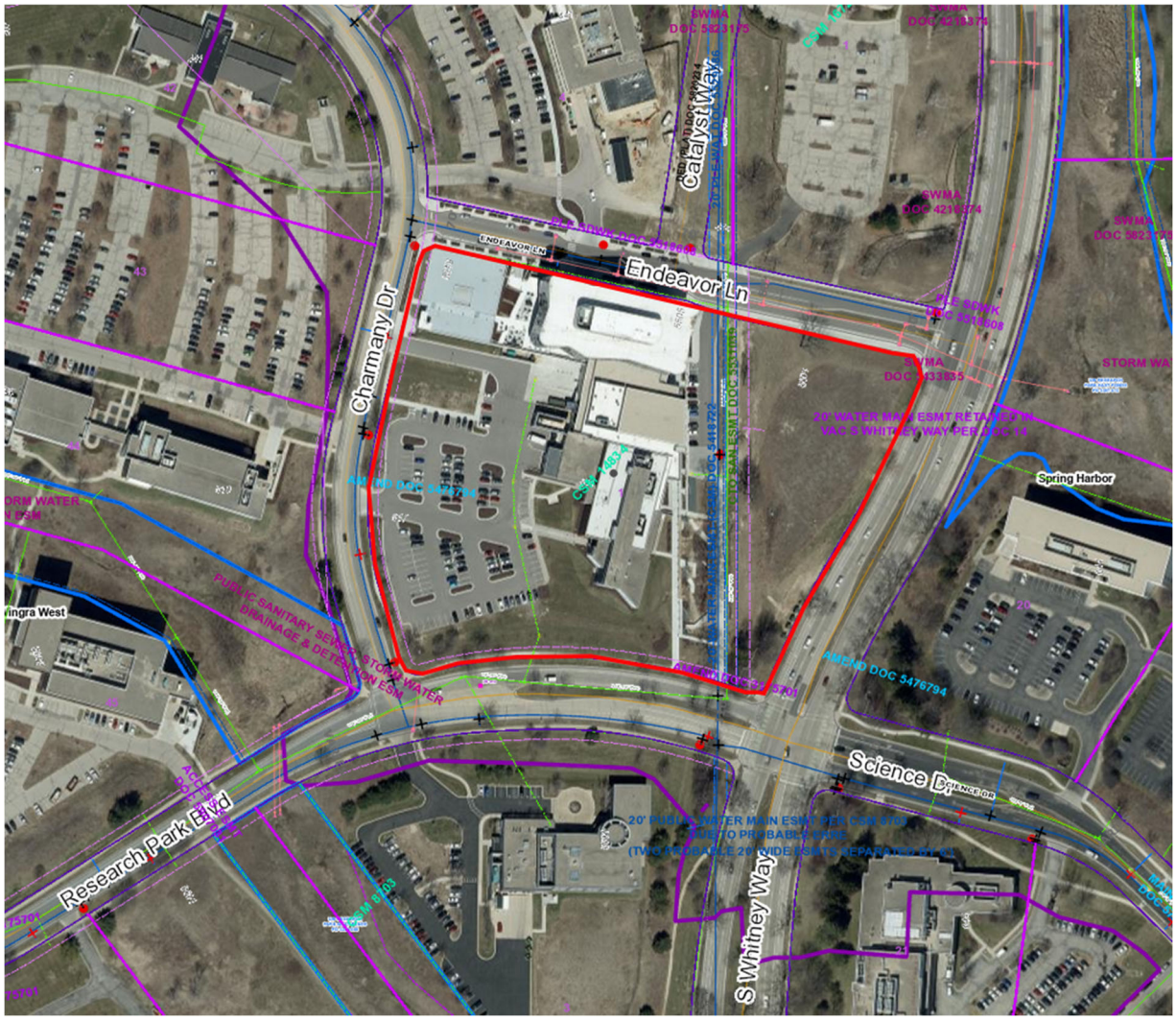

Summary of Improvements:

- Developer to complete the Certified Survey Map (CSM) required for the redevelopment. Provide a new water main easement over the existing and new water main as required and approved by Madison Water Utility.

- Developer to grant PLE for public sidewalk along north side of Endeavor Lane per City Real Estate project 11648.

- Developer to construct public sanitary sewer main and laterals, water main and service laerals, storm sewer and drainage system necessary to serve 501 Charmany Drive.

- Developer to construct street improvements, including sidewalk on both sides, for the new street, Endeavor Lane, that will be dedicated with the 501 Charmany Drive CSM.

- The Developer shall replace all sidewalk and curb and gutter which abuts the property which is damaged by the construction, or any sidewalk and curb and gutter which the City Engineer determines needs to be replaced because it is not at a desirable grade regardless of whether the condition existed prior to beginning construction.

ADDENDUM NO. 1:

- City Engineering will pay $11,305.40 for the additional cost to remove and replace the curb and gutter for the South Whitney Way left turn lane to Endeavor Lane and will not charge staff time to redesign the South Whitney Way left turn lane curb and gutter. The Developer shall complete a New Vendor Form and related W-9 form to allow the City to reimburse the Developer for this work.

CERTIFIED SURVEY MAP

LOT 41 AND PART OF LOTS 39 AND 40,
UNIVERSITY RESEARCH PARK UNIVERSITY OF WISCONISN-MADISON SECOND ADDITION,
LOCATED IN THE NE1/4 AND THE SE1/4 OF THE NW1/4 AND IN THE NW1/4 AND THE
SW1/4 OF THE NE1/4 OF SECTION 30, T7N, R9E, CITY OF MADISON, DANE COUNTY, WISCONSIN

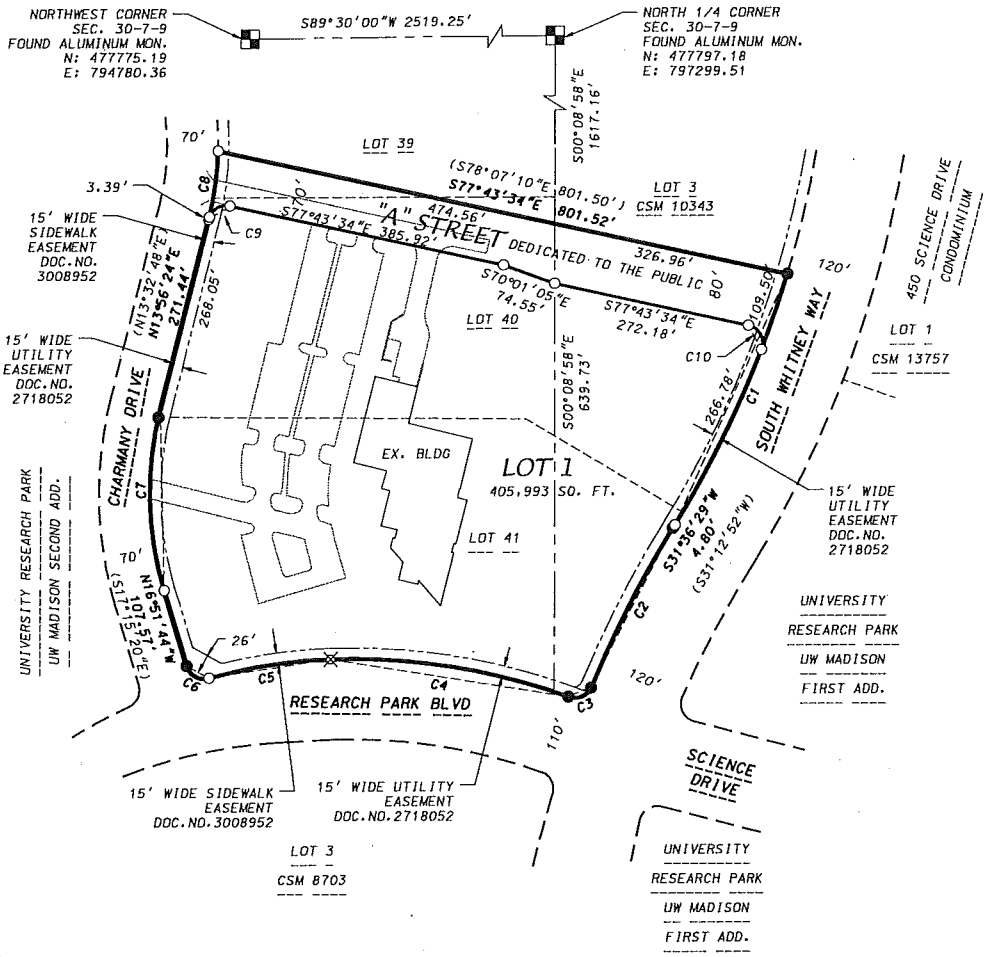

LEGEND

- ● FOUND 3/4" IRON REBAR
- ⊠ FOUND CHISELD "X"
- ○ PLACED 3/4"X18" IRON REBAR (WT=1.5LBS/FT)
- ( ) RECORDED AS INFORMATION

GRID NORTH
WISCONSIN COUNTY
COORDINATE SYSTEM
DANE

0 200
Scale 1" = 200'

SHEET 1 OF 8

D'ONOFRIO KOTTKE AND ASSOCIATES, INC.
7530 Westward Way, Madison, WI 53717
Phone: 608.833.7530 • Fax: 608.833.1089
YOUR NATURAL RESOURCE FOR LAND DEVELOPMENT

DATE: October 25, 2017
F.N.: 17-05-124
C.S.M. NO.
DOC. NO.
VOL. SHEET

SHEET NO.

CITY OF MADISON

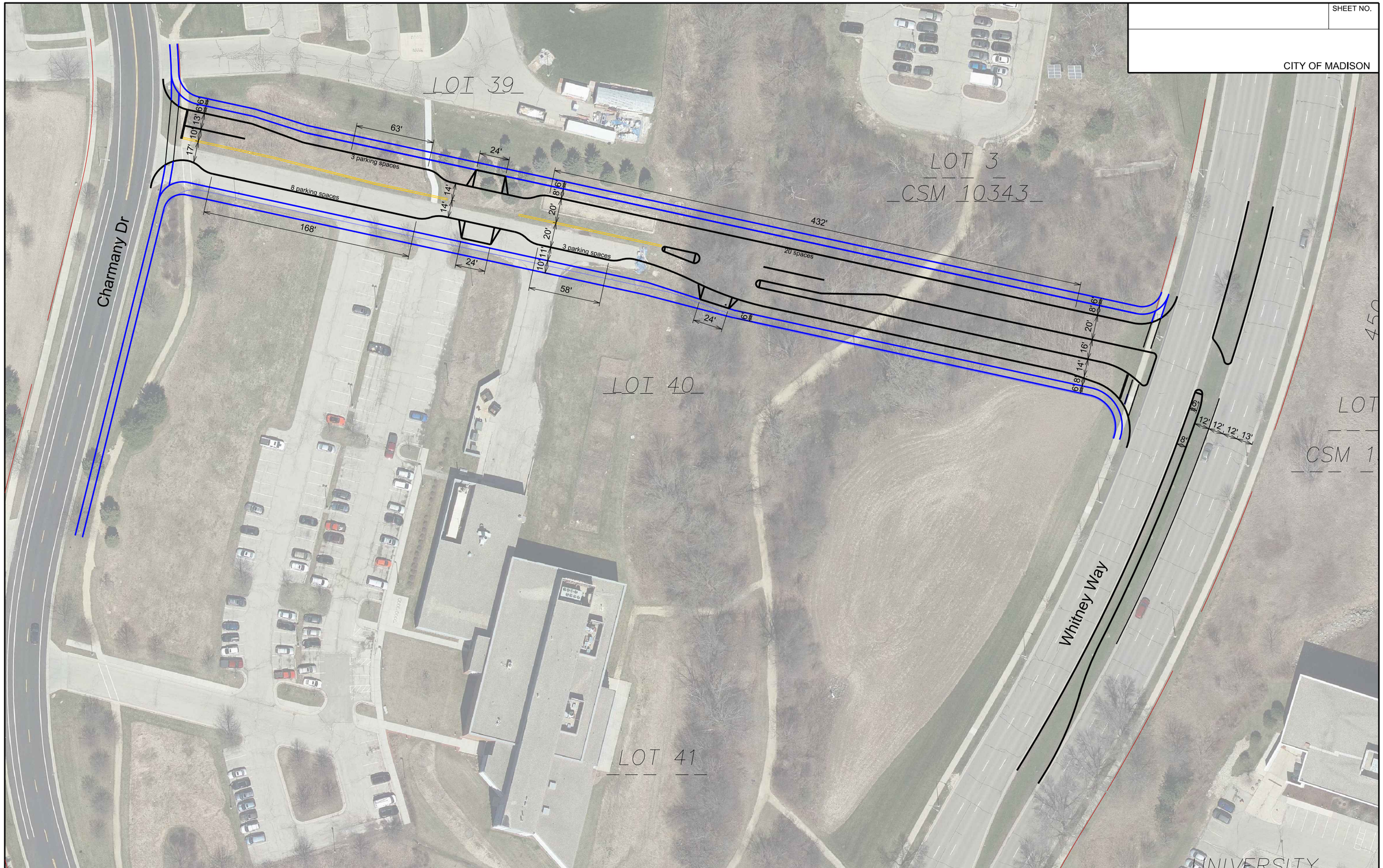

PLOT SCALE:

PLOT NAME:

REV. DATE:

ORIGINATOR: CITY OF MADISON, TRAFFIC ENG., DIV.

FILE NAME: $$...designfile...$$

DATE: $$...plottingdate...$$

UNIVERSITY RESEARCH PARK
UNIVERSITY OF WISCONSIN–MADISON

July 1, 2019

Mr. Robert F. Phillips, P.E.
City Engineer
City of Madison Engineering
210 Martin Luther King Jr. Blvd., Room 115
Madison, WI 53703

Re: City Directed Changes to Completed Work
New Intersection at South Whitney Way and Endeavor
Innovation One / Exact Sciences & University Research Park

Dear Rob;

The City Engineering Department requested a pause in construction on this work in order to issue a revised design. This project is roadwork at South Whitney Way to install a new intersection and median break with the new public street (Endeavor Lane) now under construction. Here are the events.

- Whitney Way Turn Lane Curb and Gutter was staked by D'Onofrio Kottke on June 6, 2019 in accordance with City of Madison Project Number 11847 sheet PL-1
- Whitney Way Turn Lane Curb and Gutter was inspected by City of Madison Engineer Inspector (Stewart Mael) prior to curb placement on June 7, 2019
- Prior to curb placement there was a discussion between City of Madison Engineer Inspector and Parisi (Findorff's curb and gutter subcontractor) about possible modification of curb heads. No definitive direction was given and curb was placed in accordance with the current City issued construction drawings.
- On June 10, 2019 , City of Madison Inspector notified Ben Kuehn (Findorff Superintendent) that City of Madison Engineering Staff was re-reviewing design of turn lane and to expect modifications to the current design.
- On June 11, 2019, City of Madison Design Engineer (Andrew Zeig) provided a written description of the proposed change.
- On June 13, 2019, City of Madison Design Engineer indicated that the City of Madison would issue a plan revision for changes the week of June 17, 2019.

Based on the description of the plan revision provided by the City of Madison Design Engineer, there will be re-work required and additional costs associated with that re-work. The estimated additional costs are approximately $39,356.00 (Findorff Potential Change Item #114, June 28, 2019 attached) and are associated with the following:

- Extended duration of the traffic control on Whitney Way.
- Removal of the new left turn right C&G that was placed on June 7th

510 Charmany Drive
Suite 250
Madison, WI 53719

P. 608.441.8000
F. 608.441.8010

universityresearchpark.org

- Re-installation of the new left turn right C&G in location TBD in plan revision to be issued next week
- Removal of the north bound left Whitney C&G
- Re-installation of the north bound left Whitney C&G and median in a single pour

We understand and appreciate the City's desire to get the design right. However, we would like to ask for clarity on how the modification is to be funded. Will the City reimburse University Research Park for any or all of the modification? Will the City charge URP for City staff time to redesign and reengineer the condition? Please let us know your thoughts on these economic questions at your earliest convenience. Thank you.

Sincerely,

Paul D. Muench
Associate Director
University Research Park Incorporated

CC: To Rob Phillips via e-mail attachment June 1, 2019

Findorff

DRAFT

J.H. Findorff & Son Inc.
300 S. Bedford Street
Madison, WI 53703

Phone: 608-257-5321
Fax: 608-257-5306

POTENTIAL CHANGE ITEM
No. 0114

To: Chris Smocke
Smocke & Associates Inc
925 E. Wells Street
Suite 1119
Milwaukee, WI 53202

Date: June 28, 2019

Project: 181010.01 - Innovation 1

Subject: Whitney Way Turn Lane Redesign & Construction

Change Description:
Furnish and install modified storm sewer work, curb & gutter, flatwork, and flatwork per the re-issued City of Madison drawings. Includes removal of previously poured curb and re-prep of new areas. Provide (6) additional weeks of traffic control. Additional traffic control costs are based upon receiving notice to proceed by 7/5/2019.

Detail:	Quantity:	Rate:	Amount:
Earthwork & Utilities		$	12,178.00
Modified Curb & Gutter and Flatwork		$	15,400.00
Additional Site Layout		$	750.00
Additional Traffic Control		$	10,382.00
Contractor Fee		$	646.00
		TOTAL: $	**39,356.00**

This proposed change will add __ calendar days to the contract time.
This change proposal is valid for 10 days.

This proposal is based on prompt acceptance and includes solely the usual elements such as labor, material, and standard markup. It does not include any amount for changes in sequence of work, delays, disruptions, rescheduling, extended overhead, escalated material costs, acceleration and/or impact costs. The right is expressly reserved to make claim for any or all of these items, should they occur prior to final settlement of this proposal request. This proposal must be accepted and executed within (10) ten days of this date of this proposal or be considered withdrawn and subject to escalation and requotation.

Sincerely,

J.H. Findorff & Son Inc.

By: _____

Date: _____

Smocke & Associates Inc

By: _____

Date: _____

R.G. HUSTON COMPANY, INC.
2561 Coffeytown Road
Cottage Grove, Wisconsin 53527
608-255-9223
FAX: 608-839-5936

Date: 6/26/2019

Quote to: ATTN: Derek Burdick
J.H. Findorff & Son Inc.

Job: Innovation 1
Description: Whitney Way Plan Revisions 06-26-19

Contact: Kollin Reinhardt
Cell Phone: 608-219-3117
Email: kreinhardt@rghuston.com

Whitney Way Plan Revisions 06-26-19

Item	DESCRIPTION	Quantity	Unit	Price	Total
Earthwork Additions:					
1	**Earthwork - Remove Whitney Way Curb & Gutter**				
	Quad Axle Dump Truck	3	HR	$ 121.00	$ 363.00
	50,000# Backhoe w/ Operator	3	HR	$ 218.00	$ 654.00
	Laborer	3	HR	$ 92.00	$ 276.00
					$ 1,293.00
				Earthwork Total	**$ 1,293.00**
Storm Additions:					
2	**Inlet Removal**				
	100,000# Backhoe w/ Operator	2.5	HR	$ 258.00	$ 645.00
	50,000# Backhoe w/ Operator	2.5	HR	$ 218.00	$ 545.00
	4 CY Loader w/ Operator	2.5	HR	$ 193.00	$ 482.50
	Pipe Layer	2.5	HR	$ 94.00	$ 235.00
	Laborer	2.5	HR	$ 92.00	$ 230.00
					$ 2,137.50
3	**48" Precast MH**				
	48" Precast Manhole	2	EA	$ 1,475.00	$ 2,950.00
	100,000# Backhoe w/ Operator	3	HR	$ 258.00	$ 774.00
	50,000# Backhoe w/ Operator	3	HR	$ 218.00	$ 654.00
	4 CY Loader w/ Operator	3	HR	$ 193.00	$ 579.00
	Pipe Layer	3	HR	$ 94.00	$ 282.00
	Laborer	3	HR	$ 92.00	$ 276.00
					$ 5,515.00
4	**Pipe Plug**				
	Concrete for Plug	1	EA	$ 150.00	$ 150.00
	100,000# Backhoe w/ Operator	0.5	HR	$ 258.00	$ 129.00
	50,000# Backhoe w/ Operator	0.5	HR	$ 218.00	$ 109.00
	4 CY Loader w/ Operator	0.5	HR	$ 193.00	$ 96.50
	Pipe Layer	0.5	HR	$ 94.00	$ 47.00
	Laborer	0.5	HR	$ 92.00	$ 46.00
					$ 577.50
5	**Pipe Collars**				
	Concrete for Collars	2	EA	$ 150.00	$ 300.00
	100,000# Backhoe w/ Operator	1	HR	$ 258.00	$ 258.00
	50,000# Backhoe w/ Operator	1	HR	$ 218.00	$ 218.00
	4 CY Loader w/ Operator	1	HR	$ 193.00	$ 193.00
	Pipe Layer	1	HR	$ 94.00	$ 94.00
	Laborer	1	HR	$ 92.00	$ 92.00
					$ 1,155.00
5	**Pipe Crew Mobilization (If Required)**	1	LS	$ 1,500.00	**$ 1,500.00**
				Storm Sewer Total	**$ 10,885.00**

Overall TOTAL COST = $ 12,178.00

AN EQUAL OPPORTUNITY / AFFIRMITIVE ACTION EMPLOYER

Parisi Construction Co., Inc.

508 S. Nine Mound Road
Verona, WI 53593
608-848-5991 p
608-848-5992 f

To:	Findorff	Job Name:	Whitney Way Median
	Attn: Derek Burdick	Date of Plans:	6-20-19
Date:	6-26-19	Addendum(s):	
Phone:	354-1572	Revision Date:	
Fax:			
Quote #:	19-1-030 RCO-03 Rev. 1		

Pricing for the design change at Whitney Way
Added colored & stamped concrete at Endeavor

ITEM	DESCRIPTION	QUANTITY	UNIT		AMOUNT
	Type G Curb & Gutter - 18"	180.00	LF		
	Type A Curb & Gutter - 30"	25.00	LF		
	Concrete Median Noses	2.00	EA		
	Change from Standard to Color/Stamp - Endeavor	600.00	SF		
GRAND TOTAL					**$15,400.00**

NOTES:

- Surveying layout is not included.
- Aggregate base under all concrete is not included.
- Sawcutting and removals are not included.
- Backfilling/restoration is not included.
- Prep work includes fine grading (+/- 0.1ft) only with material provided by others.
- Castings to be bolted together and set on inlets by others.
- One (1) mobilization is included each for C&G and for flatwork.
- Traffic control is not included.
- Final payment will be based on as-built quantities.
- Additional mobilizations will be billed at $950 each.
- Protection of the stone base from frost, freezing and wet conditions is not included.
- Bond, testing, protection and reinforcement are excluded.
- Minimum 2-week notice required prior to the start of any work.
- Delays while on site that are due to others will be charged on a T&M basis.
- Slopes shall be designed with a minimum of 1% drainage or localized water ponding may occur.
- Others to provide concrete washout area on adjacent Innovation site.
- Based on standard 6-bag 4,000 psi concrete mix design during normal business hours Monday - Friday.
- Color hardener is not included.
- No monolithic pouring of curb sections as shown on D-2.

Jake Chaillier
Concrete Division Manager

Mega Rentals, Inc.

Physical Address: 2541 Advance Road, Madison, WI 53718
Mailing Address: P.O. Box 8026, Madison, WI 53708
Phone (608) 222-8055 Fax (608) 222-8091
Equal Opportunity and Affirmative Action Employer

Quotation

Contractor: R.G.Huston Co.Inc.

Attention: Kollin Reinhardt

Phone No.: 255-9223

Fax No.:

Cell: 219-3117

Terms: Net 30 Days from Billing

Date of Quote: May 28, 2019

Length of Contract:

Project Name: Whitney Way and Endeavor Lane Lane Closures

Project Location: Research Park area Madison

Project Number:

County: Dane

We are pleased to quote the following:

Item No.	Description	Unit of Measure	Quantity	Unit Price	Extended Price
	Deliver and set up right lane closure north bound on Whitney Way drop in place a left lane closure south bound Whitney Way just north of Research Park	LS	1.00	500.00	
	Equipment Rentals after initial set up	LS	per day	247.20	
	Contractor to do daily up and down closures and lane shifts				
	$1,730.40 per week				
	Pickup and return of equipment. NO FLAG PERSONS ARE INCLUDED CONTRACTOR IS RESPONSIBLE FOR DAILY MAINTENANCE.				
	tax is not included if applicable			Total	0.00

Quoted By: Will Petersen

If this quote is accepted please sign below and fax back to fax number listed above.
Work WILL NOT be processed until this quote is signed, complete with Purchase Order or Job Number.

(Accepted By) (Printed Name) (Date) (PO# or Job#)

Department of Public Works
Engineering Division
Robert F. Phillips, P.E., City Engineer

City-County Building, Room 115
210 Martin Luther King, Jr. Boulevard
Madison, Wisconsin 53703
Phone: (608) 266-4751
Fax: (608) 264-9275
engineering@cityofmadison.com
www.cityofmadison.com/engineering

Deputy City Engineer
Gregory T. Fries, P.E.

Deputy Division Manager
Kathleen M. Cryan

Principal Engineer 2
Christopher J. Petykowski, P.E.
John S. Fahrney, P.E.

Principal Engineer 1
Christina M. Bachmann, P.E.
Mark D. Moder, P.E.
Janet Schmidt, P.E.

Facilities & Sustainability
Jeanne E. Hoffman, Manager
Bryan Cooper, Principal Architect

Mapping Section Manager
Eric T. Pederson, P.S.

Financial Manager
Steven B. Danner-Rivers

August 14, 2019

To: **Paul D. Muench**
Associate Director
University Research Park Incorporated
510 Charmany Drive
Suite 250
Madison, WI 53719

Re: **City Directed Changes to Completed Work**
New Intersection at South Whitney Way and Endeavor
Innovation One / Exact Sciences & University Research Park

Dear Paul,

The City Engineering Department will pay for the additional cost to remove and replaced the curb and gutter for the South Whitney Way left turn lane to Endeavor Lane but the estimated cost needs to be adjusted to only include work associated with the C&G removal and replacement.

- The City will pay extended duration of the traffic control for 12 days from June 7, 2019 until the plan revision issued on June 19, 2019.
- Parisi Construction Company Inc. listed changing standard to stamped/colored concrete on Endeavor Lane. That concrete was not poured as of the June 19, 2019 plan revision. The City will not pay for that cost.
- The removal of the north bound left South Whiney Way C&G was originally part of the March 1, 2019 Endeavor Lane plans and should have been removed as part of the left turn lane work. The City will not pay for that cost.
- On June 26, 2019 the City approved via email to Derek Burdick of Findorff that the South Whitney Way north bound left turn lane median C&G does not have to be a single pour of concrete.
- R.G. Huston Company Inc. listed an inlet removal, 48" precast manhole, a pipe plug, and pipe collars that are not within the South Whitney Way left turn lane. The City will not pay for those items. The City will pay for the earthwork associated with the South Whitney Way left turn lane C&G removal and replacement.

The City will reimburse URP $11,305.40 for a portion of the modifications and will not charge City staff time to redesign the South Whitney Way left turn lane C&G. If you are acceptable to the reimbursement, please contact Tim Troester of my staff at (608) 267-1995 to discuss coordinating an amendment to the developer's agreement.

Sincerely,

Robert F. Phillips, P.E.
City Engineer

RFP:ajz

Cc by email: Chris Petykowski, City Engineering
Tim Troester, City Engineering

REVISION 6/20/19 AJZ
- Whitney Way typical

UNIVERSITY RESEARCH PARK/ INNOVATION ONE; PROJECT NO. 11847	SHEET NO. D-2
DETAILS	
TYPICAL SECTIONS	CITY OF MADISON

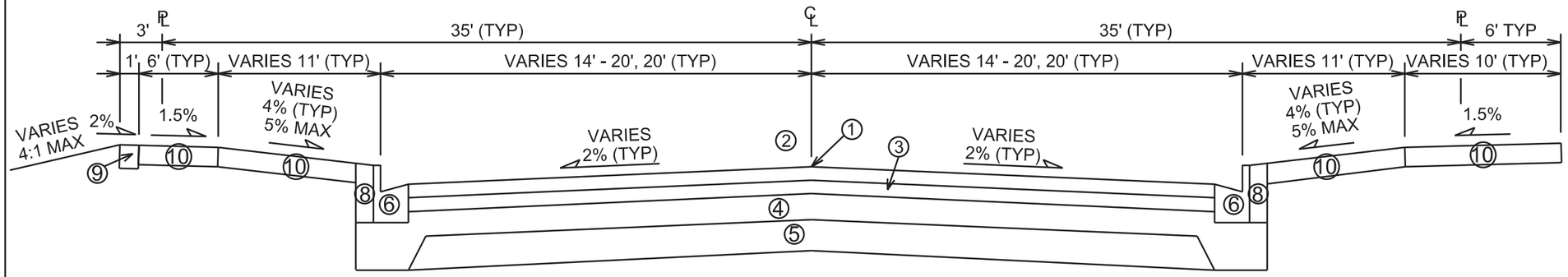

TYPICAL FINISHED SECTION
ENDEAVOR LANE
STA 10+49 TO STA 14+68
STA 15+01 TO STA 15+48

1. POINT REFERRED TO ON PROFILE
2. 1 3/4" HMA UPPER LAYER, 4 LT 58-28 S
3. 1 3/4" HMA LOWER LAYER, 4 LT 58-28 S
4. 6" GRADATION 2 CRUSHED STONE
5. 6" GRADATION 1 CRUSHED STONE
6. ~~TYPE 'A' CONCRETE CURB & GUTTER~~
7. TYPE 'G' CONCRETE CURB & GUTTER
8. ~~FILL INCIDENTAL~~
9. 6" TOPSOIL, TERRACE SEED & EROSION MAT
10. 5" CONCRETE SIDEWALK
11. 7" CONRETE SIDEWALK
12. 2" HMA UPPER LAYER, 4 MT 58-28 S
13. 3 1/2" HMA LOWER LAYER, 3 MT 58-28 S

GENERAL NOTES:

1. SEE PLAN & PROFILES FOR TOP OF CURB ELEVATIONS.

2. TYPICAL SECTIONS NOT TO SCALE.

*5" CONCRETE SIDEWALK STA 14+68 TO STA 15+01 RT & STA 15+48 TO STA 16+02. 6" TOPSOIL, SEED & EMAT STA 16+02 TO STA 18+80

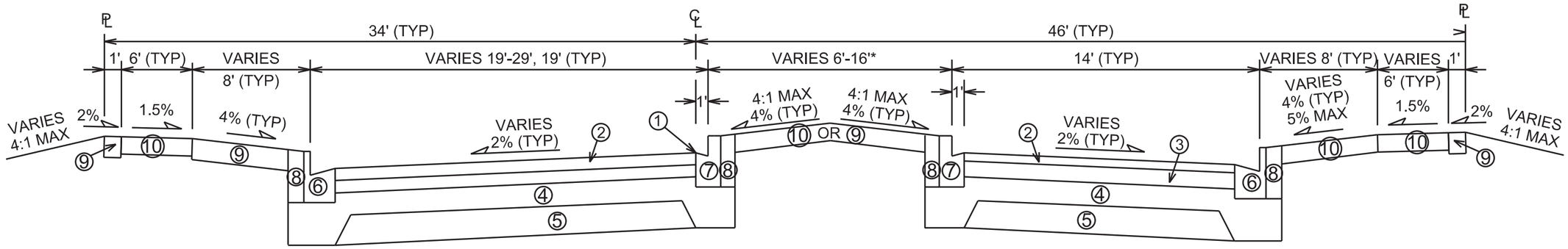

TYPICAL FINISHED SECTION
ENDEAVOR LANE
STA 14+68 TO STA 15+01
STA 15+48 TO STA 18+80

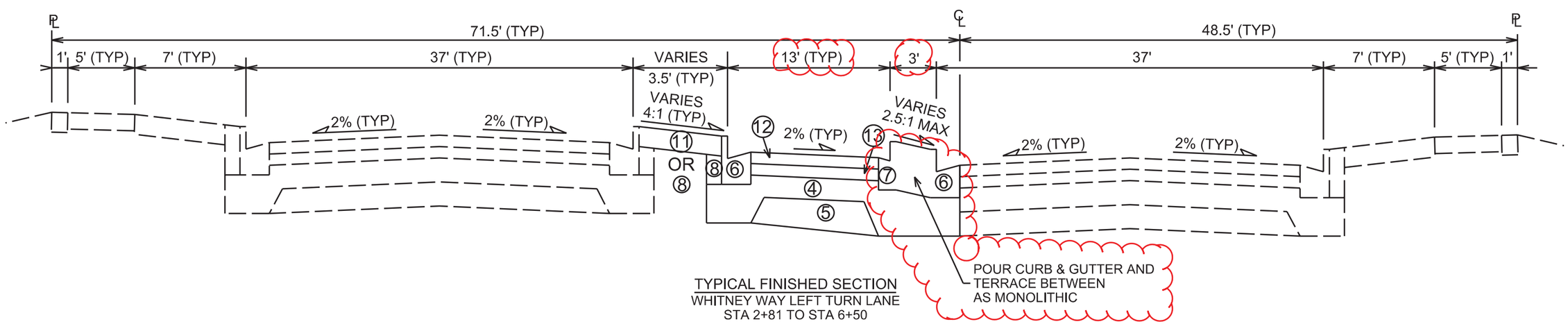

TYPICAL FINISHED SECTION
WHITNEY WAY LEFT TURN LANE
STA 2+81 TO STA 6+50

PLOT SCALE: ____
PLOT NAME: ____
REV. DATE: ____
ORIGINATOR: CITY OF MADISON, STREETS DIVISION

FILE NAME: M:\DESIGN\Projects\11847\Streets\Design\11847EN_DetailsD-2.dgn
DATE: 6/18/2019
PLOT SCALE: 124.9998 sf / In.

REVISION 4/19/19 AJZ
- Revised Planter Locations
REVISION 6/20/19 AJZ
- Add note about stamped concrete median

UNIVERSITY RESEARCH PARK/
INNOVATION ONE; PROJECT NO. 11847

SHEET NO. P-1

PLAN AND PROFILE

ENDEAVOR LANE — CITY OF MADISON

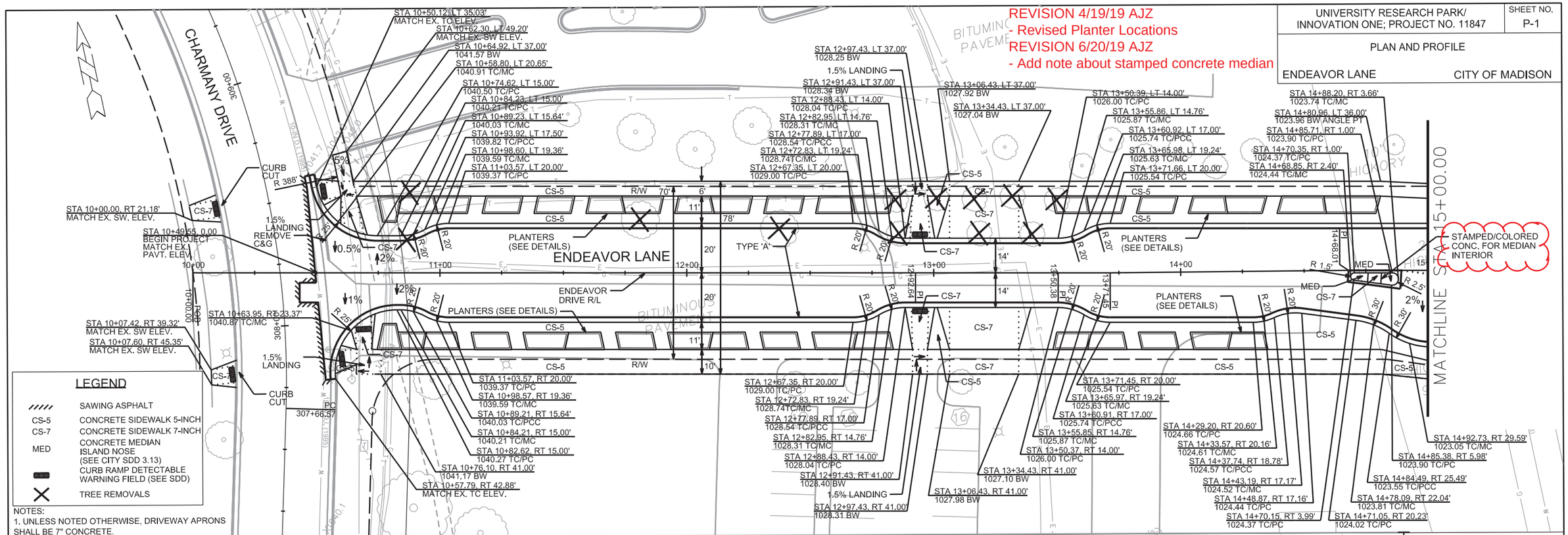

LEGEND

//////	SAWING ASPHALT
CS-5	CONCRETE SIDEWALK 5-INCH
CS-7	CONCRETE SIDEWALK 7-INCH
MED	CONCRETE MEDIAN ISLAND NOSE (SEE CITY SDD 3.13)
	CURB RAMP DETECTABLE WARNING FIELD (SEE SDD)
X	TREE REMOVALS

NOTES:
1. UNLESS NOTED OTHERWISE, DRIVEWAY APRONS SHALL BE 7" CONCRETE.

PLOT SCALE: ____
PLOT NAME: ____
REV. DATE: ____
ORIGINATOR: CITY OF MADISON, STREETS DIVISION

FILE NAME: M:\DESIGN\Projects\11847\Streets\Design\11847EN-PnPEndeavor1.dgn

DATE: 6/18/2019

REVISION 6/20/19 AJZ
- Revise Endeavor Lane Median

UNIVERSITY RESEARCH PARK/
INNOVATION ONE; PROJECT NO. 11847

SHEET NO. P-2

PLAN AND PROFILE

ENDEAVOR LANE — CITY OF MADISON

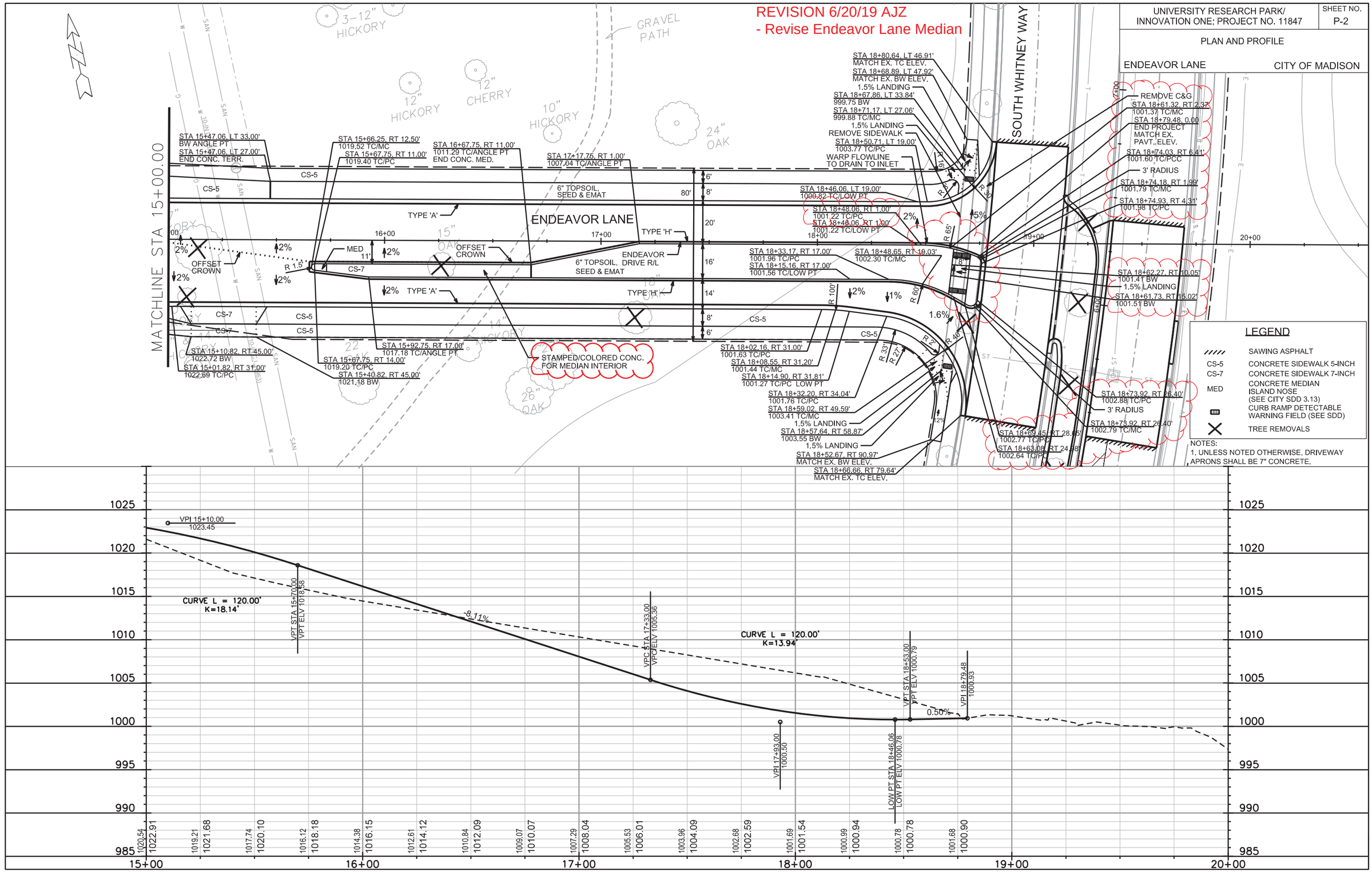

PLOT SCALE: ____
PLOT NAME: ____
REV. DATE: ____
ORIGINATOR: CITY OF MADISON, STREETS DIVISION

FILE NAME: M:\DESIGN\Projects\11847\Streets\Design\11847EN-PnPEndeavor2.dgn

DATE: 6/18/2019

UNIVERSITY RESEARCH PARK/ INNOVATION ONE; PROJECT NO. 11847	SHEET NO. PL-1
PLAN	
WHITNEY WAY	CITY OF MADISON

REVISION 6/20/19 AJZ
- Turn Lane

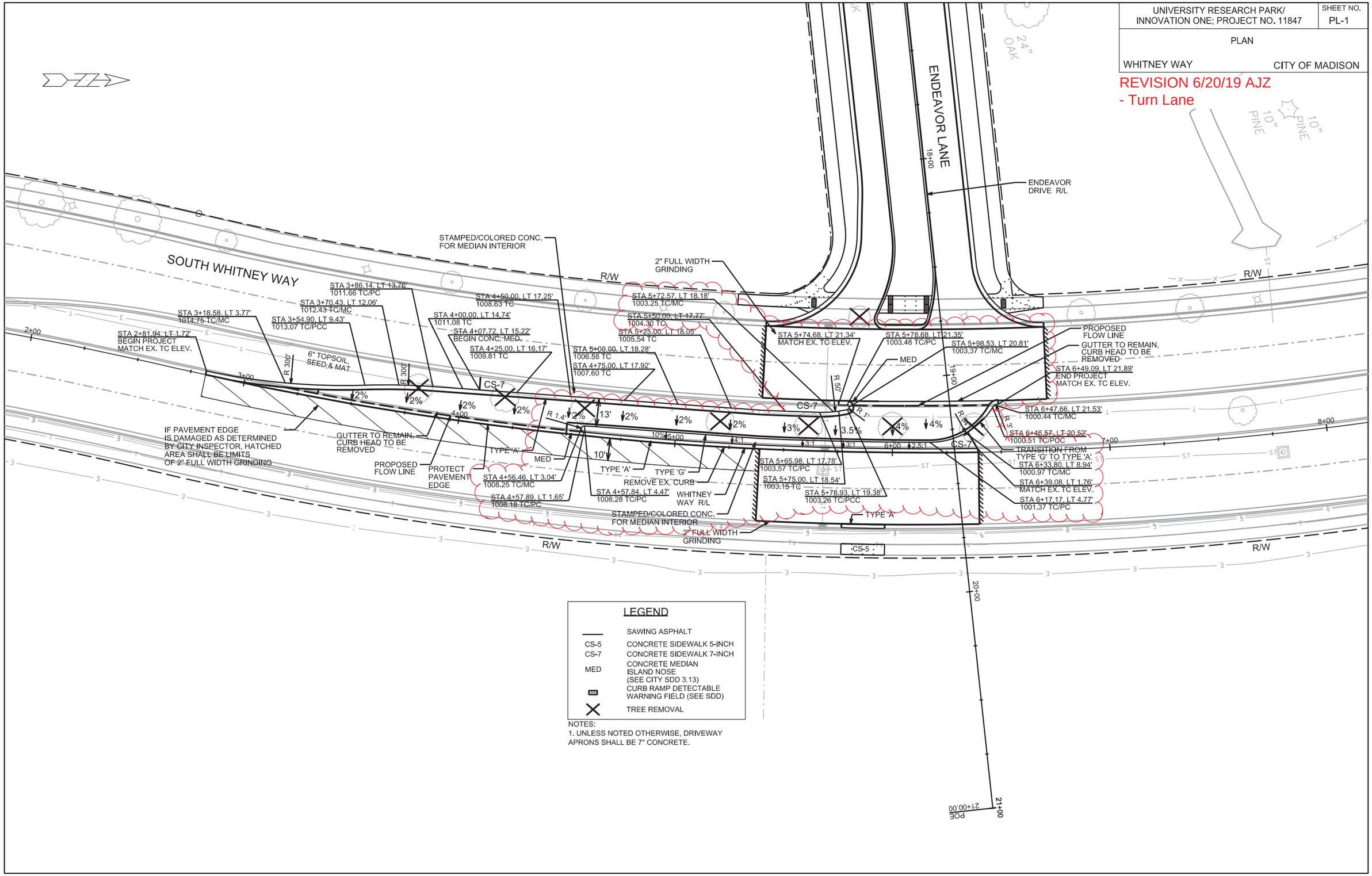

LEGEND

———	SAWING ASPHALT
CS-5	CONCRETE SIDEWALK 5-INCH
CS-7	CONCRETE SIDEWALK 7-INCH
MED	CONCRETE MEDIAN ISLAND NOSE (SEE CITY SDD 3.13)
	CURB RAMP DETECTABLE WARNING FIELD (SEE SDD)
X	TREE REMOVAL

NOTES:
1. UNLESS NOTED OTHERWISE, DRIVEWAY APRONS SHALL BE 7" CONCRETE.

PLOT SCALE: ____
PLOT NAME: ____
REV. DATE: ____
ORIGINATOR: CITY OF MADISON, STREETS DIVISION

FILE NAME: M:\DESIGN\Projects\11847\Streets\Design\11847EN-PlanWhitneyWay.dgn
DATE: 6/18/2019
PLOT SCALE: 39.9999 sf / In.

UNIVERSITY RESEARCH PARK/
INNOVATION ONE

SHEET NO.
U-2

UTILITY
PLAN AND PROFILE

ENDEAVOR DRIVE

CITY OF MADISON

REV 4/5/2019 DAO
REV 5/14/2019 DAO
REV 6/17/2019 DAO

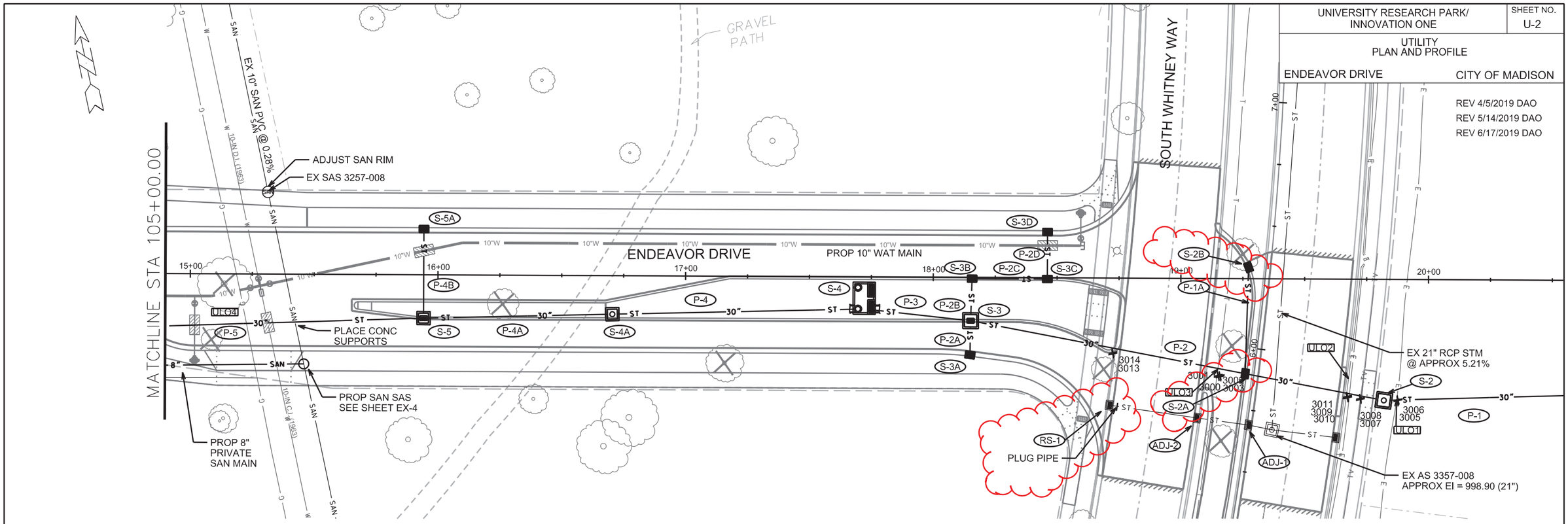

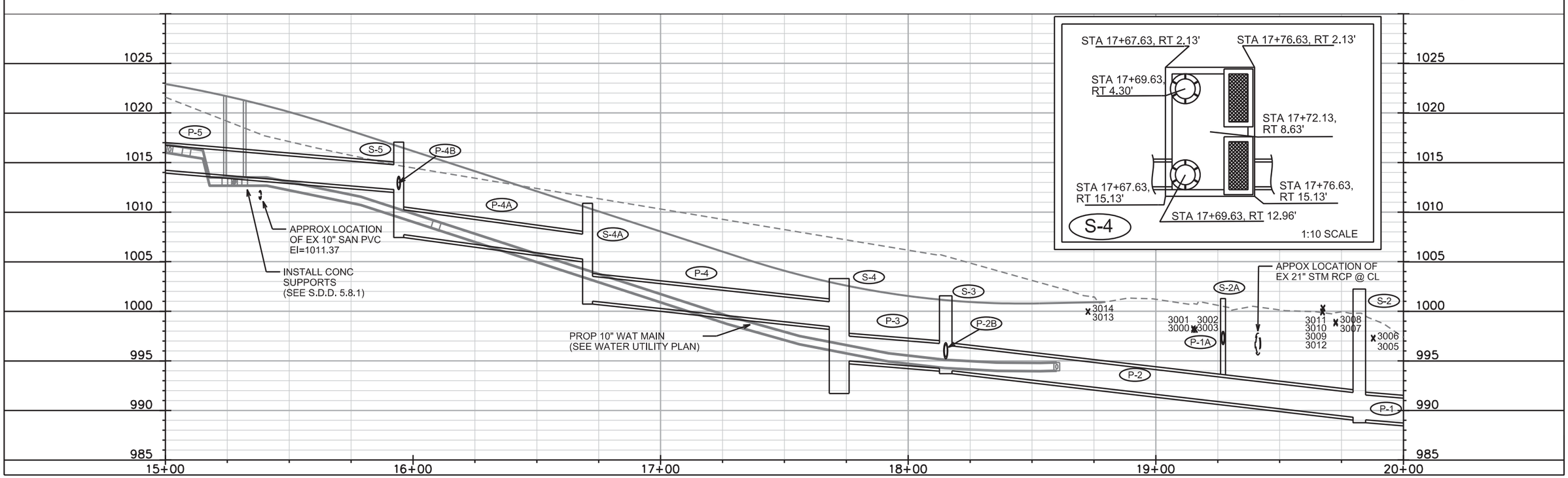

PLOT SCALE: ____
PLOT NAME: ____
REV. DATE: ____
ORIGINATOR: CITY OF MADISON, STREETS DIVISION

FILE NAME: M:\DESIGN\Projects\11847\Storm\Design\11847STM-PnPEndeavor2.dgn

DATE: 6/18/2019

STORM SEWER SCHEDULE

* **REV 5/14/2019 DAO**
** **REV 6/17/2019 DAO**

UNIVERSITY RESEARCH PARK/ INNOVATION ONE	SHEET NO. U-4
STORM SEWER SCHEDULE	
PROJ #11847	CITY OF MADISON

PROPOSED STORM STRUCTURES

	STRUC. NO.	STATION	LOCATION (OFFSET)	TYPE	TOP OF CASTING	E.I.	DEPTH	NOTES
	ENDEAVOR LN							
	S-1	20+81.80	RT-45.79	30" AE W/ GATE	-	987.00	-	
*	**S-2**	**19+82.17**	**RT-48.88**	5X5 SAS	**1001.38**	**989.16**	**12.22**	W/1550-0054
**	**S-2A**	**19+26.65**	**RT-38.45**	SADDLED H TYPE 2	1001.28	**993.60**	**7.68**	**W/3067-7004-V; (5)**
**	**S-2B**	**19+27.76**	**RT-4.86**	H INLET	1000.91	997.41	3.50	**W/3067-7004-V; (5)**
**	**S-3**	**18+15.16**	**RT-17.00**	5X5 SAS	1001.56	994.15	7.41	**LP; W/3067-7004-VB; (5)**
	S-3A	18+14.96	RT-31.32	H INLET	1001.27	996.27	5.00	LP; W/3067-7004-VB
**	**S-3B**	**18+15.69**	**RT-1.00**	H INLET	1001.55	996.63	4.92	**W/3067-7004-V; (5)**
**	**S-3C**	**18+46.06**	**RT-1.00**	H INLET	1001.22	997.15	4.07	**LP; W/3067-7004-VB; (5)**
	S-3D	18+46.06	LT-18.50	H INLET	1000.82	997.42	3.40	LP; W/3067-7004-VB
	S-4	17+72.13	RT-8.63	SC TR DEVICE	1003.29	995.15	8.14	FP; (1)
	S-4A	16+70.47	RT-15.56	4X4 SAS	1010.88	1001.12	9.76	FP; W/1550-0054
**	**S-5**	**15+94.25**	**RT-17.00**	4X4 SAS	1017.05	1007.87	9.18	**FP; W/3067-7004-V; (5)**
	S-5A	15+94.25	LT-18.50	H INLET	1016.65	1013.15	3.50	W/3067-7004-V
	S-6	14+78.27	RT-21.58	6X6 SAS	1023.81	1013.50	10.31	W/3067-7004-V; (2)
	S-6A	14+78.18	LT-18.50	H INLET	1023.75	1020.25	3.50	W/3067-7004-V
	S-7	13+71.45	RT-19.50	4X4 SAS	1025.54	1018.29	7.25	W/3067-7004-V
	S-7A	13+71.66	LT-19.50	H INLET	1025.54	1022.04	3.50	W/3067-7004-V
	S-8	12+67.35	RT-19.50	5X5 SAS	1029.00	1020.80	8.20	W/3067-7004-V; (3)
	S-8A	12+67.35	LT-19.50	H INLET	1029.00	1025.50	3.50	W/3067-7004-V
	S-9	11+84.54	RT-19.50	4X4 SAS	1034.47	1028.47	6.00	W/3067-7004-V

PROPOSED STORM PIPES

	PIPE NO.	FROM (DNSTM)	TO (UPSTM)	DISCH. E.I.	INLET E.I.	PLAN (PAY) LGTH (FT)	PIPE LGTH (FT)	SLOPE (%)	PIPE SIZE	TYPE	NOTES
	ENDEAVOR LN										
*	**P-1**	S-1	S-2	987.00	**989.16**	**100**	**97**	**2.23%**	30"	RCP	
	P-1A	S-2A	S-2B	996.81	997.41	43	40	1.49%	12"	RCP	NCM
*	**P-2**	S-2	S-3	**989.16**	994.15	**170**	**165**	**3.02%**	30"	RCP	
	P-2A	S-3	S-3A	995.65	996.27	14	10	6.02%	12"	RCP	
	P-2B	S-3	S-3B	995.40	996.63	17	14	9.11%	15"	RCP	
	P-2C	S-3B	S-3C	996.88	997.15	29	27	0.99%	12"	RCP	
	P-2D	S-3C	S-3D	997.25	997.42	18	17	1.00%	12"	RCP	
	P-3	S-3	S-4	994.15	995.15	43	37	2.72%	30"	RCP	
	P-4	S-4	S-4A	998.25	1001.12	102	96	2.99%	30"	RCP	
	P-4A	S-4A	S-5	1005.13	1007.87	76	72	3.81%	30"	RCP	NCM
	P-4B	S-5	S-5A	1012.44	1013.15	36	33	2.15%	12"	RCP	NCM
	P-5	S-5	S-6	1012.19	1014.75	116	111	2.31%	30"	RCP	NCM
	P-5A	S-6	S-6A	1019.00	1020.25	40	36	3.49%	12"	RCP	NCM
	P-6	S-6	S-7	1015.75	1018.29	107	102	2.50%	18"	RCP	
	P-6A	S-7	S-7A	1021.00	1022.04	39	36	2.89%	12"	RCP	NCM
	P-7	S-7	S-8	1018.39	1020.80	104	100	2.42%	18"	RCP	
	P-7A	S-8	S-8A	1024.00	1025.50	39	36	4.23%	12"	RCP	NCM
	P-8	S-8	S-9	1023.50	1028.47	83	78	6.35%	18"	RCP	

STORM SEWER ULOs

	ULO NO.	STATION	LOCATION (OFFSET)	TYPE	NOTES	
					SEE 3005, 3006	
*	**ULO1**	19+87.66	RT-46.40	ELEC	**SEE 3007,3008, 3009, 3010, 3011**	
*	**ULO2**	19+68.29	RT-46.30	ELEC/TEL	**SEE 3000, 3001, 3002, 3003**	
*	**ULO3**	19+15.14	RT-36.25	TEL		
	ULO4	15+22.76	RT-20.01	GAS		
	ULO5	13+39.45	RT-19.50	GAS/ELEC		
*	**3000**	**19+15.19**	**RT-39.54**	**FIBER**	**TOP @**	**998.27**
*	**3001**	**19+15.29**	**RT-39.11**	**FIBER**	**TOP @**	**998.13**
*	**3002**	**19+16.05**	**RT-39.25**	**FIBER**	**TOP @**	**998.17**
*	**3003**	**19+15.97**	**RT-39.68**	**FIBER**	**TOP @**	**998.14**
*	**3005**	**19+87.82**	**RT-48.98**	**POWER**	**TOP @**	**997.32**
*	**3006**	**1987+91.00**	**RT-48.61**	**POWER**	**TOP @**	**997.24**
*	**3007**	**19+72.66**	**RT-48.59**	**FIBER**	**TOP @**	**998.79**
*	**3008**	**19+72.76**	**RT-48.11**	**FIBER**	**TOP @**	**998.92**
*	**3009**	**19+67.57**	**RT-47.38**	**POWER**	**TOP @**	**1000.27**
*	**3010**	**19+67.54**	**RT-47.85**	**POWER**	**TOP @**	**1000.35**
*	**3011**	**19+67.40**	**RT-47.33**	**POWER**	**TOP @**	**999.88**
*	**3012**	**19+67.39**	**RT-47.92**	**POWER**	**TOP @**	**999.98**
*	**3013**	**18+72.59**	**RT-30.70**	**POWER**	**TOP @**	**999.97**
*	**3014**	**18+72.72**	**RT-30.16**	**POWER**	**TOP @**	**999.96**

ADJUST/REMOVE STORM STRUCTURES

	STRUC. NO.	TYPE	STATION	LOCATION (OFFSET)	TOP OF CASTING	PROP TOC	ADJ (FT)	NOTES
	S WHITNEY WAY							
	ADJ-1	IN 3357-011	5+68.98	LT-1.26	1002.45	1002.44	-0.01	
	ADJ-2	IN 3357-010	5+68.88	LT-21.55	1003.69	1003.03	-0.66	
**	**ADJ-3**	~~IN 3357-009~~	~~5+69.00~~	~~LT-58.02~~	~~1003.27~~	~~1003.30~~	~~0.03~~	~~(4)~~ **TO BE REMOVED (RS-1)**
**	**RS-1**	IN 3357-009	5+69.00	LT-58.02				**PLUG PIPE**

NOTE: PLAN LENGTH (PAY LENGTH) IS FROM CENTER OF STRUCTURE TO CENTER OF STRUCTURE. PIPE LENGTH IS ACTUAL LENGTH OF PIPE FROM STRUCTURE WALL TO STRUCTURE WALL. SLOPE CALCULATED USING PIPE LENGTH.

SPECIFIC NOTES

(1) STA & LOC OF CENTER OF STRUCTURE GIVEN; SEE DETAIL SHEET D-1 SCREEN TREATMENT DEVICE
(2) PROP PRVT CONNECTION 30" RCP @ EI=1030.50 (S)
(3) PROP PRVT CONNECTION 18" RCP @ EI=1020.90 (S)
(4) REPLACE EXISTING CASTING WITH R-3067-7009 FOR MOUNTABLE CURB
** **(5) STA OFFSET PROVIDED IS AT FACE OF CURB**

STANDARD NOTES:

- ABBREVIATIONS: AE = APRON ENDWALL; RCP = REINFORCED CONCRETE PIPE; HERCP = HORIZONTAL ELLIPTICAL REINFORCED CONCRETE PIPE; DNA = DOES NOT APPLY; SAS = SEWER ACCESS STRUCTURE; LP = LOW POINT INLET STRUCTURE; FP = FIELD POURED STRUCTURE; TR = TOP OF CONCRETE ROOF; NCM = NO CROWN MATCH FOR PIPES; UD = UNDERDRAIN
- APPROXIMATE DISCHARGE E.I. GIVEN, ADJUST E.I. AND PIPE SLOPE IN THE FIELD.
- TOP OF CASTING GRADE GIVEN IS THE TOP OF CURB FOR INLET STRUCTURES AND THE FLOWLINE OF THE CLOSED CASTING FOR SAS's.
- TOP OF CONCRETE ROOF (TR) IS 1.25' BELOW TOP OF CASTING UNLESS OTHERWISE NOTED.
- ALL REINFORCED CONCRETE PIPES TO BE CLASS III UNLESS OTHERWISE NOTED.
- SURVEYOR TO CONFIRM THAT ALL INLET STATION / OFFSETS LINE UP WITH PROPOSED CURB AND GUTTER.
- ALL STRUCTURES CALLED OUT AS FIELD POURED SHALL BE FIELD POURED. ALL OTHER STRUCTURES (NOT INDICATED AS FIELD POURED) SHALL BE SUBMITTED TO CITY ENGINEERING FOR APPROVAL IF PRECAST STRUCTURES ARE PREFERRED. CONTACT DANIEL OLIVARES OF CITY ENGINEERING AT (608) 261-9285 FOR PRECAST APPROVALS, FAX SHOP DRAWINGS TO (608)264-9275, OR EMAIL SHOP DRAWINGS TO DAOLIVARES@CITYOFMADISON.COM.