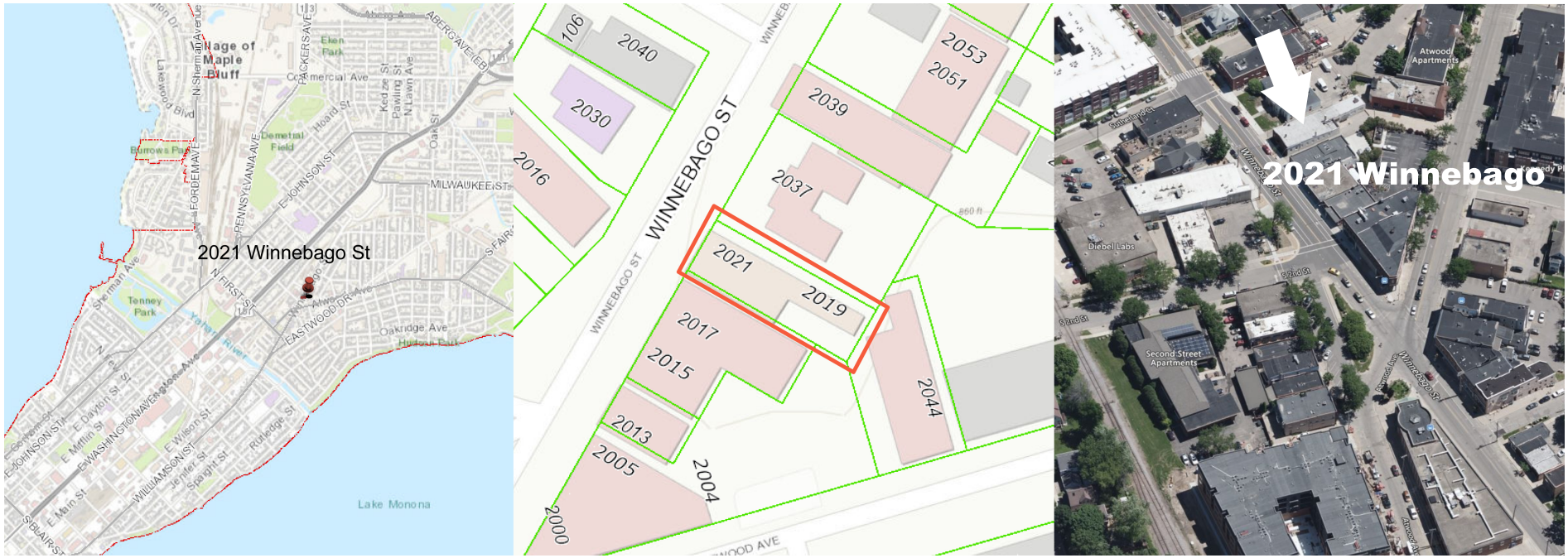
2021 Winnebago St
Lake Monona
WINNEBAGO ST
2040
2030
2016
2039
2037
2053
2051
2021
2019
2017
2015
2013
2005
2004
2000
2044
2021 Winnebago
Atwood Apartments
Diebel Labs
Second Street Apartments

Location

History

1
A400
EXISTING ELEVATION

In Situ

Consultant:

Location:
2021 WINNEBAGO ST
MADISON, WI 53704

NEW TENANT FOR:
2021 WINNEBAGO ST
DATCHA HOUSE LLC
MADISON, WI

Revisions:

No.	Date:	Description:

Graphic Scale	
Project Number	
Set Type	
Date Issued	
Sheet Number	A400

DBT
Dark Bronze
Matte Textured

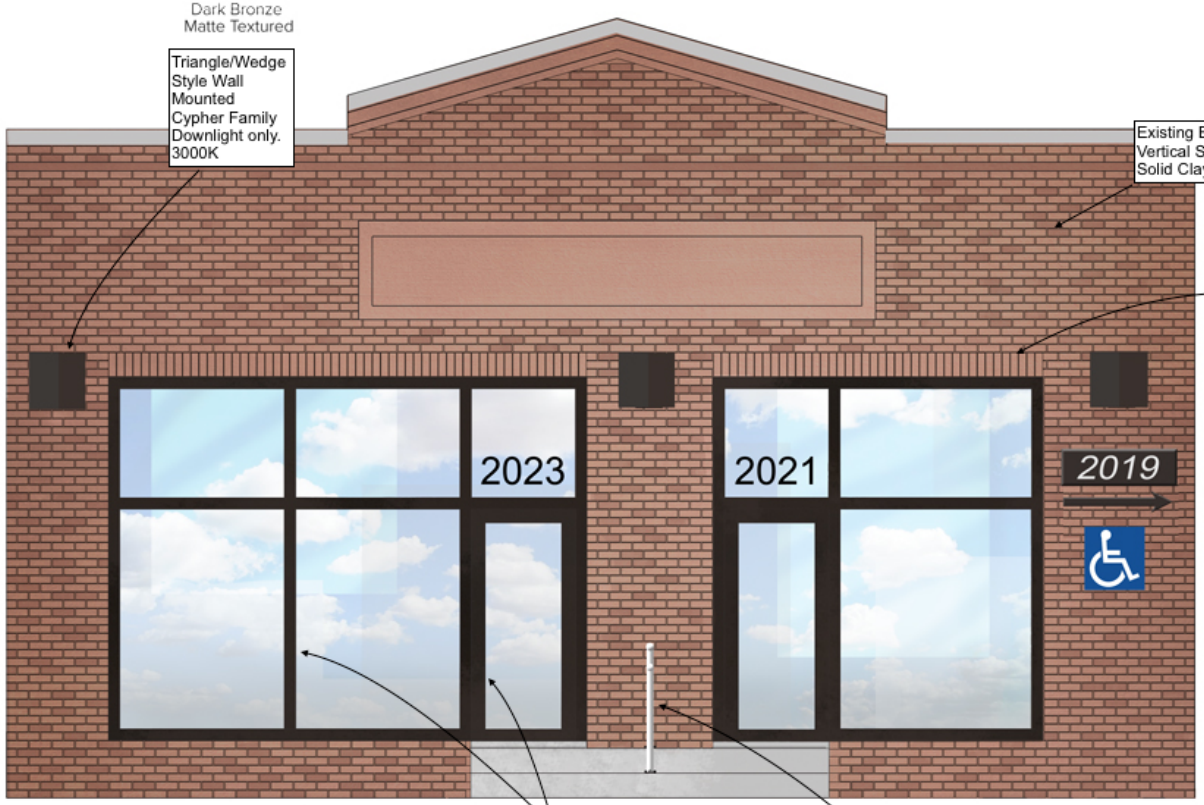

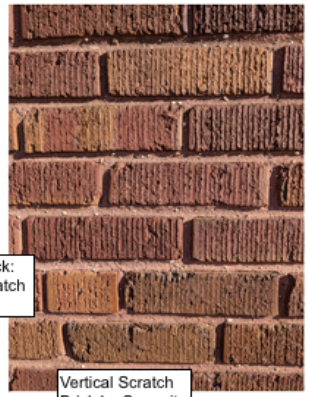

Vertical Scratch Brick by Summit Brick Co. Match Existing Brick for Soldier Course or use recovered brick from demo.

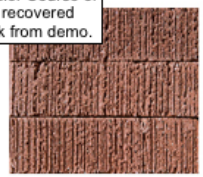

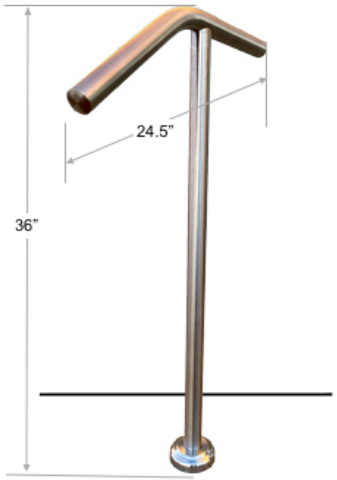

1
A402
RENDERD ELEVATION
Scale: 1/4" = 1'

0" 1' 2' 4'

Design

Consultant:

Location:
2021 WINNEBAGO ST
MADISON, WI 53704

NEW TENANT FOR:
2021 WINNEBAGO ST
DATCHA HOUSE LLC
MADISON, WI

Revisions:

No.	Date	Description

Graphic Scale

Project Number

Set Type

Date Issued

Sheet Number A402

Vision