Site Plan

'WE' rendering

'US' rendering

'OUR' rendering

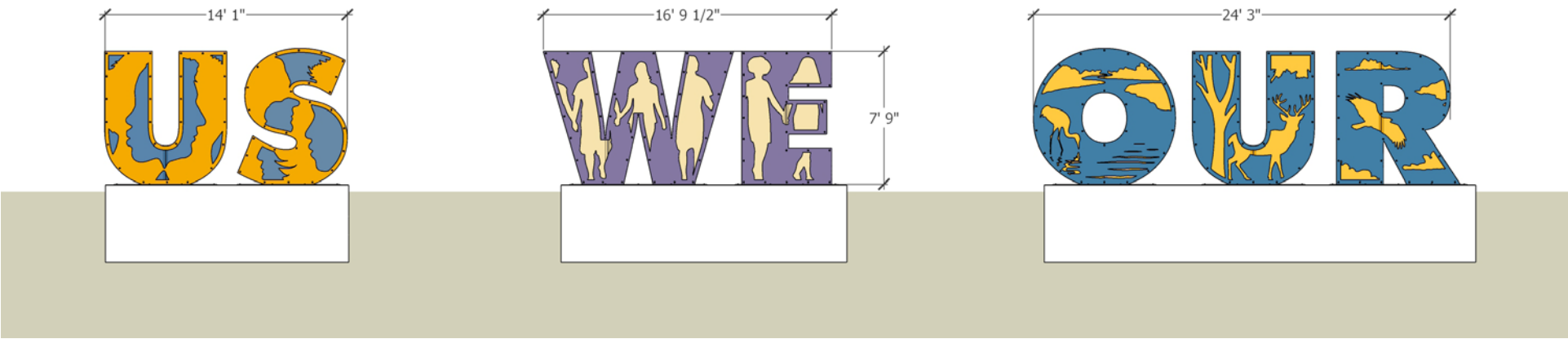

Front Elevation

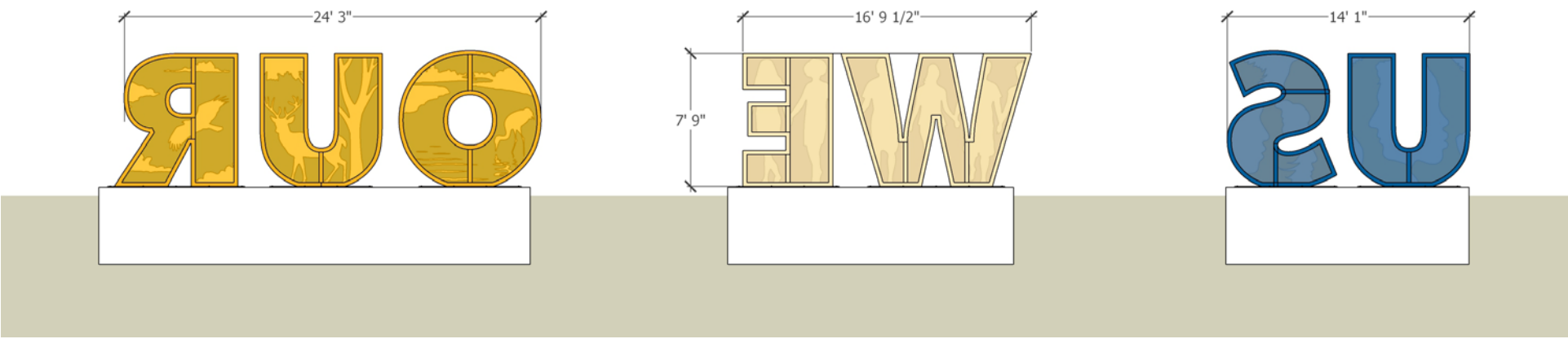

Rear Elevation

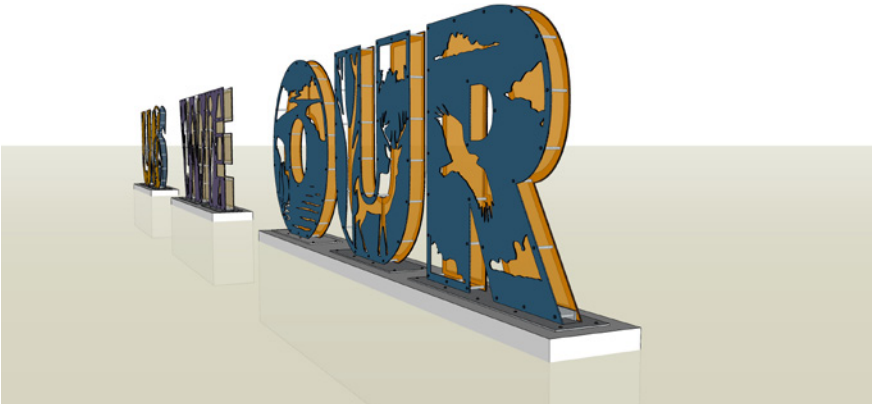

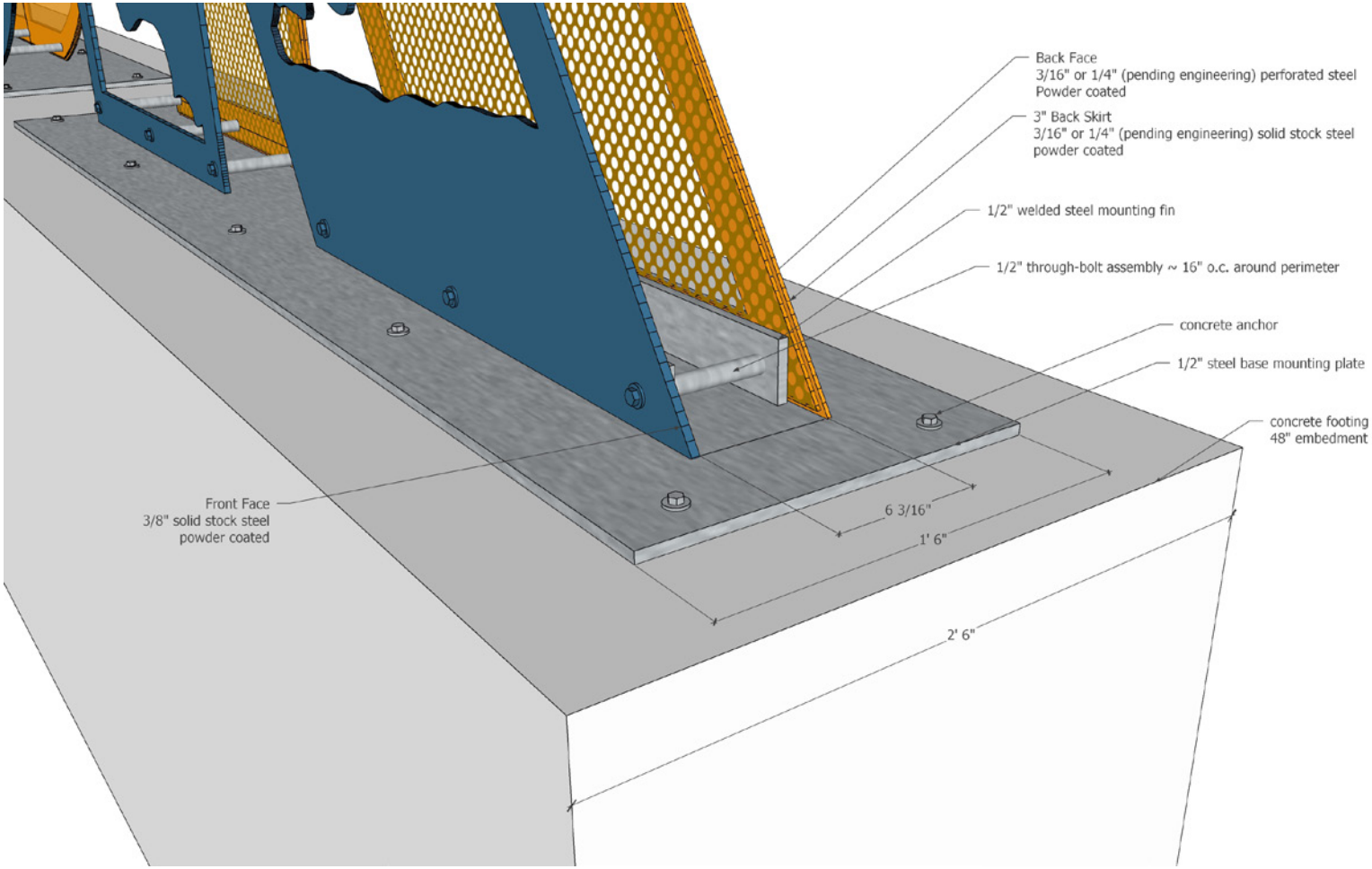

Assembly Detail

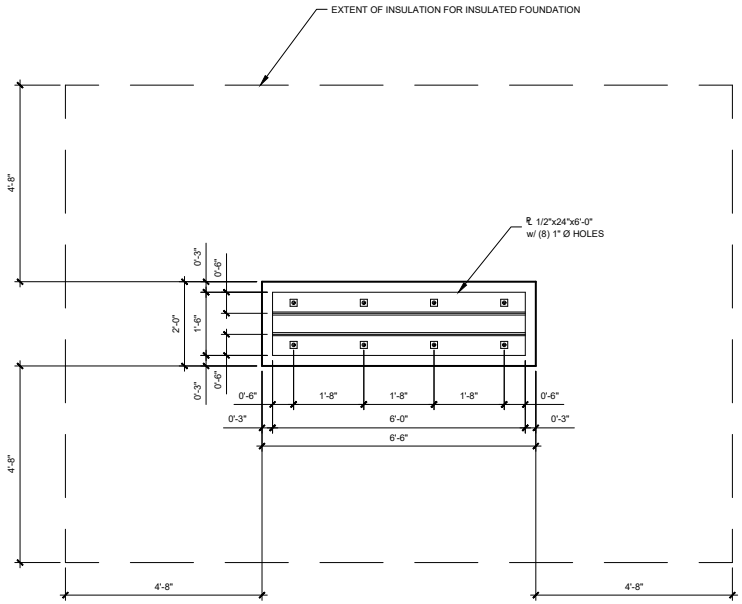

PLAN - 6'-0" LONG BASE

SCALE: 1/2" = 1'-0"

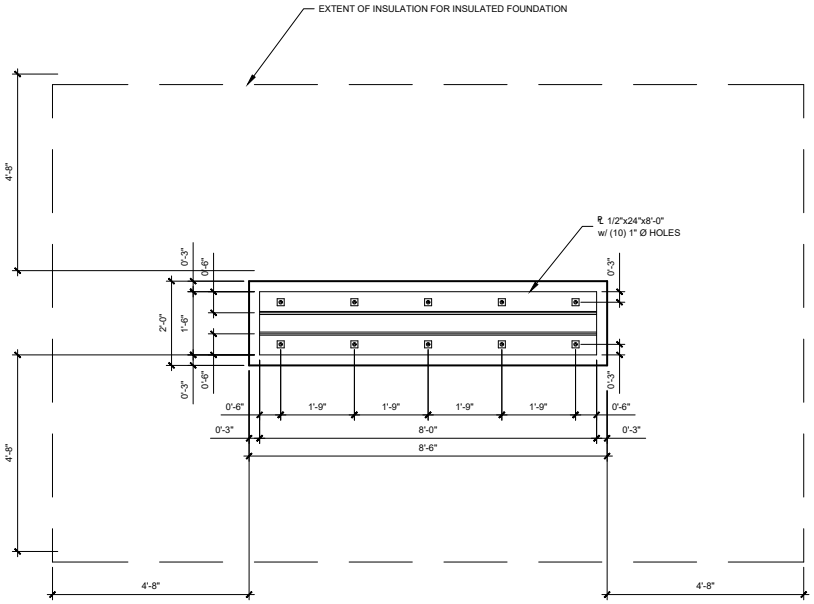

PLAN - 8'-0" LONG BASE

SCALE: 1/2" = 1'-0"

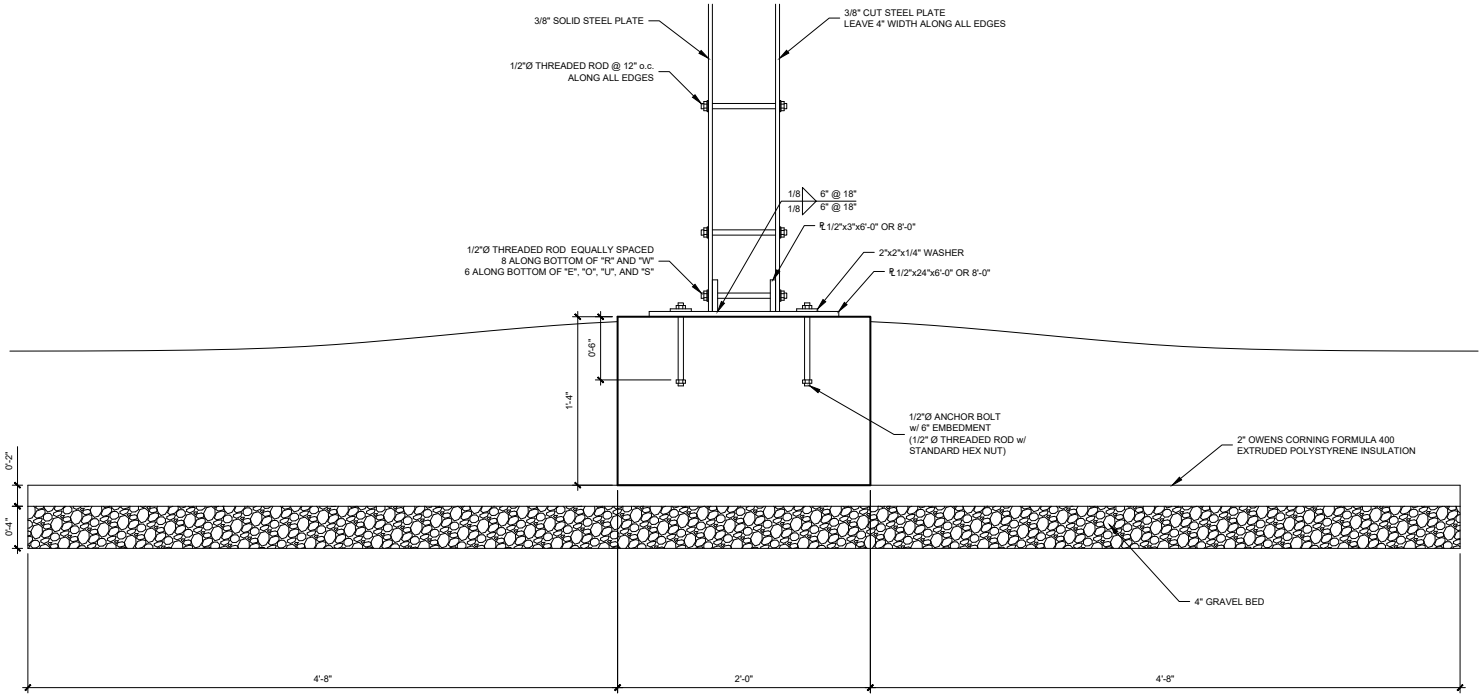

SECTION - INSULATED FOUNDATION

SCALE: 1 1/2" = 1'-0"

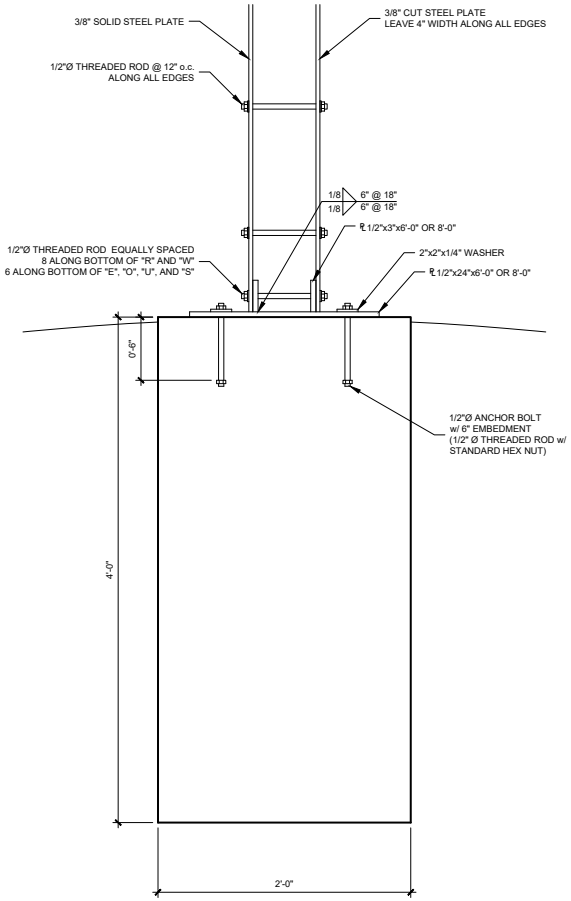

SECTION - UNINSULATED FOUNDATION OPTION

SCALE: 1 1/2" = 1'-0"

ITEM	PROVIDER	COST	NOTES
Excavation, base material, form work, concrete	Bachmann Construction	12,000	
Crane, rough terrain forklift	Bachmann Construction	3,500	
Bolting installation	Ray Chi Studio and assistants	1,000	
Engineering fee	Richard A Devries Engineering	500	
Steel, solid and perforated material	Direct Metals	19,000	
Stainless Steel hardware	Bolt Depot	1,500	
Metal fabrication, color, delivery	V-Metals	20,000	
Artist fee	Ray Chi	10,000	
Contingency		2,500	
	Total	70,000	