AGENDA #_____

City of Madison, Wisconsin

REPORT OF: FAÇADE IMPROVEMENT GRANT STAFF TEAM

TO: URBAN DESIGN COMMISSION

Façade Improvement Grant Application:
1: 111-117 S. Pinckney/ 107-111 King Street

AUTHOR: Craig Wilson
Office of Economic Revitalization
Economic Development Division

DATED: June 13, 2017

SUMMARY:

On October 3, 2000, the Common Council adopted Resolution No. 61179, approving the Objectives and Criteria for the Façade Improvement Grant Program. The resolution specifies that all Façade Improvement proposals be referred to the Urban Design Commission for comments and recommendations.

Attached for your review is the following Facade Improvement proposal:

1. **111-117 S. Pinckney/ 107-111 King Street**
   Grantee: Richard Fritz

The scope of the exterior work will include:

a. **Knock down existing stucco. Re-skim coat and re-paint.**
b. **Refurbish signage bands.**
c. **Install new pillar lights.**
d. **Restoration of marble storefront bases.**
e. **Replace aluminum entry doors with historically accurate wood doors.**
f. **Install new lintel over King Street entrance and refinish balcony.**

g. **Remove awning and metal screening covering transoms from Pinckney street side.**
h. **Install new operable transoms.**
i. **Remove chimney.**

See Attachments for Specifications

Total project cost for 111-117 S. Pinckney/ 107-111 King Street exterior work is estimated at $217,750. Façade Improvement Grant not to exceed $20,000.

RECOMMENDATION:

The Landmarks Commission at its June 19th meeting will review this project. Our recommendation will be contingent upon the Landmarks Commission granting a Certificate of Appropriateness for the scope of work covered in this report.

The above Façade Improvement Grant proposal has been reviewed by the Façade Improvement Grant Program staff team and meets the requirements of the program. The Staff Team recommends approval of the above Facade Improvement Grant proposal.

CITY OF MADISON
FAÇADE IMPROVEMENT GRANT PROGRAM

Building and beautifying Madison, one storefront at a time

Department of Planning & Community & Economic Development
Economic Development Division
215 Martin Luther King Jr., Boulevard
Craig Wilson, 266-6557
cwilson@cityofmadison.com

PROGRAM APPLICATION

Applicant: Richard Fritz Phone: 608. 575. 9885

Business Name: Fritz Properties

Building Name: Pinckney Street Arcade (Same bldg as 107-113 King St.)

Business Address: 111 South Pinckney Zip Code 53703

E-mail Address: jrfritz@sbcglobal.com

Property Owner: Richard Fritz

Address: P.O. Box 6067 Madison, WI 53716

Name of Grantee: Richard Fritz

Lease Terms:

Definition of Project Scope: Restoration of the two story facade including removal of expanded metal second story elements, removal of cementious coating over existing masonry, replacing of single strength or missing second story "eyebrow" windows with insulated units

ATTACHMENT

Please provide photographs and copy of lease, land contract, or deed. Tenants must provide owner's written authorization.

PROJECT BUDGET

List Individual Project Elements (Awning, sign, painting of trim, etc.)	Total Cost	Grant $	Private $
tbd = discovery is needed to determine approach to scope of work.			
Total:			

CITY OF MADISON
FAÇADE IMPROVEMENT GRANT PROGRAM

Building and beautifying Madison, one storefront at a time

Department of Planning & Community & Economic Development
Economic Development Division
215 Martin Luther King Jr., Boulevard
Craig Wilson, 266-6557
cwilson@cityofmadison.com

Contractor/Supplier: TRI-NORTH BUILDERS

Address: 2625 Research Park Drive

ATTACHMENT

* Bids, estimates, and/or contracts, product brochures, locater map and design drawings, if appropriate.

REMARKS _____

APPLICANT'S CERTIFICATION

The Applicant certifies that all information in this application and all information furnished in support of this application is given for the purpose of obtaining a grant under the City of Madison Façade Grant Program and is true and complete to the best of the applicant's knowledge and belief.

Signature: _____ Date: 10/24/16

Signature: _____ Date: 10/21/16

Please send this completed application, accompanying materials, and application fee of $100 to:

Economic Development Division
Attn: Craig Wilson
215 Martin Luther King Jr. Boulevard, Room 312
P.O. Box 2983
Madison, WI 53701-2983

Tri-North
BUILD SMART.

P: 608.271.8717
F: 608.271.3354
W: TRI-NORTH.COM

June 9, 2017

Melissa Destree AIA, IIDA
Destree Design Architects, Incorporated
222 West Washington Avenue #310
Madison, WI 53703

RE: Pinckney / King Street Arcade Building Exterior Renovation Cost Estimate Summary

Dear Melissa,
The following is the initial cost estimate for the proposed exterior renovation work for the aforementioned building. Please review and comment as needed.

Phase of Work	**Estimate**
King Street lintel and soffit repair	$ 10,400
Remove Splatter texture on Pinckney Street, Sounding / Repair of loose cementious materials and recoat of removed materials	$ 49,000
Skim-coat Pinckney Street Elevation	$ 18,000
Remove "decorative" metal window boxes on Pinckney Street	$ 4,200
Replace 18 eyebrow windows on Pinckney Street	$ 14,400
Paint exterior wood window mullion	$ 13,750
Remove masonry stack from rooftop / roof patch	$ 7,600
New retail space doors and hardware	$ 12,000
Refinish King Street balcony, new door and hardware	$ 7,800
Eight (8) new electrical fixtures	$ 2,500
Remove bronze colored sign band and repair holes to refinish	$ 4,200
Signage allowance	$ 15,000
Marble below windows on exterior	$ 9,000
Interior finishes (entry flooring and column repair)	$ 2,500
Design and Permitting allowance	$ 10,000
General Conditions (supervision, direct project OHD costs)	$ 14,400

Tri-North
BUILD SMART.

P: 608.271.8717
F: 608.271.3354
W: TRI-NORTH.COM

Overhead and Markup (12%)	$ 23,000
Total estimated costs	$217,750

We look forward to moving this project forward as the approvals allow. We will coordinate the initial stabilization work with you and the owner.
Respectfully,

Bernie Lange, Client Services
Tri-North Builders

P.O. Box 259568 | Madison, WI 53725-9568 | Fitchburg, WI 53711-4908 | 2625 Research Park Drive

Arcade Building
107-113 King Street
111 South Pickney

Historic Condition Report & Recommendations – May 31, 2017

Knock-down stucco, re-skim-coat and re-paint stucco
Recommendation to refurbish signage band below Context – to historic proportion
Window – existing wood trim prep and paint
Exterior pillar lights to be replaced with Historic light per image
Parapet cracking – historic balustrade buried in parapet wall (refer to historic Photo)
'Artificial Stone' Cornice band painted. Paint is failing. Assuming it is a cast concrete product. Cast stone will be repaired and stabilized, skim-coated, and re-painted
Arch is painted brick. Paint is failing. Stabilize and re-paint
Storefront base – Appears to be Marble (drawings state Marble) with paint (failing). Option to remove paint and restore Marble.
Paint scheme – Propose new paint scheme for monochromatic 'original' tone

Metal trim piece (lintel) is collapsing – wet entered top side of deck. Corner with cracking at brickline. Stabilization is required immediately.
2nd floor door not historic – This is used as an exiting 'jump balcony'. The door will be replaced with a new 36" wide door that mimics the original 2ft wide door and sidelight. Interior partition work may be required to access the replacement.

Aluminum storefront at entry doors to be replaced with historically accurate system, wood doors and element that acknowledges the original revolving door. Add historic gold painted signage on window.

Reinstall the 'hotel' historic marker into the interior of the arcade.

Reinstall the 'Arcade' historic marker with the refurbishment of the column/stucco.

Close-up of Condition
Metal trim piece is collapsing – wet entered top side of deck. Corner with cracking at brickline
Balcony structure to be reviewed – need access to topside
Possible rusted off clips.

Operable transoms were original to building
Refurbish wood trim and paint

Knock-down stucco, re-skim-coat and re-paint stucco
Recommendation to refurbish signage band to historic proportion
Window – existing wood trim prep and paint
Exterior pillar lights to be replaced with Historic light per image
Parapet cracking – historic balustrade buried in parapet wall (refer to historic Photo)
'Artificial Stone' Cornice band painted. Paint is failing. Assuming it is a cast concrete product. Cast stone will be repaired and stabilized, skim-coated, and re-painted
Arch is painted brick. Paint is failing. Stabilize and re-paint
Storefront base – Appears to be Marble (drawings state Marble) with paint (failing). Option to remove paint and restore Marble.
Paint scheme – Propose new paint scheme for monochromatic 'original' tone
Update Signage
Aluminum storefronts to remain

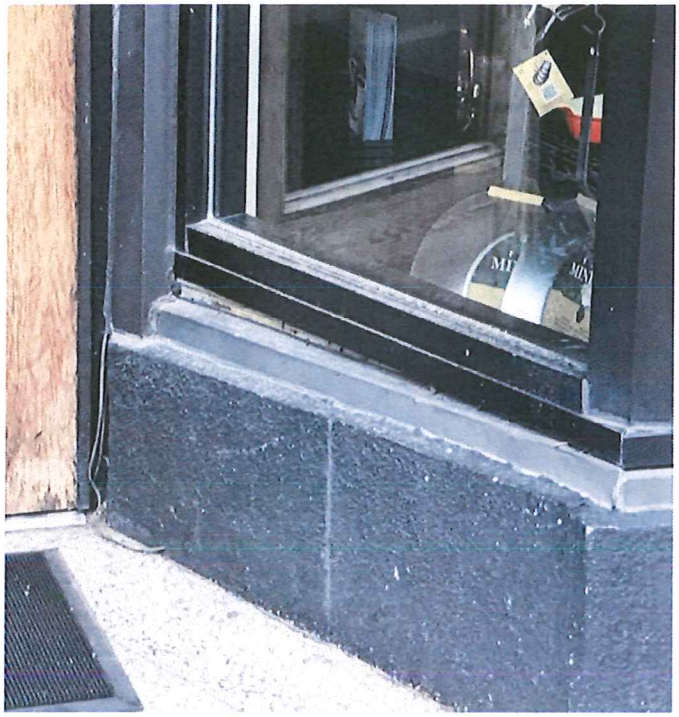

Suggestion for Aluminum drip cap to align wood and alum trim.
Remove paint from marble
Replace Wood doors with New Oak stained doors to match Historic profile with ADA hardware (quantity = 3)

Secondary façade on Pickney Street –
Knock-down stucco, re-skim-coat and re-paint stucco
Recommendation to refurbish signage band to historic proportion
2nd floor screening to be removed and historic transoms replaced with Graham alum system
Exterior pillar lights to be replaced with Historic light per image
'Artificial Stone' Cornice band painted. Paint is failing. Assuming it is a cast concrete product. Cast stone will be repaired and stabilized, skim-coated, and re-painted
Storefront base – maintenance to 117 wood storefront
Arcade Entry Storefront - Aluminum storefront at entry doors to be replaced with historically accurate system, wood doors and element that acknowledges the original revolving door. Add historic gold painted signage on window.
Paint scheme – Propose new paint scheme for monochromatic 'original' tone
Update Signage at Arcade Entry (remove awning)
Remove large chimney

Image cementitious material. Knock-down and re-skimcoat

Pickney stucco texture/cementitious material is very 'loose' compared to King Street texture. Recommendation to retain material, skim coat with 'smoother' texture, similar to King Street.

Area to Test the removal of the cementitious material. Hard fired brick face has spalled off while removing concrete product. This product is not stucco.

Historic vestibule – flooring is not original. Recommendation to create a perimeter mosaic tile with walk-off carpet inset at both vestibules on Pickney and King Street. Replace ceiling light with new historic acorn style light.

KING STREET ARCADE

FACADE RENOVATION

107-111 KING STREET & 111-117 S PINCKNEY ST

MADISON, WI

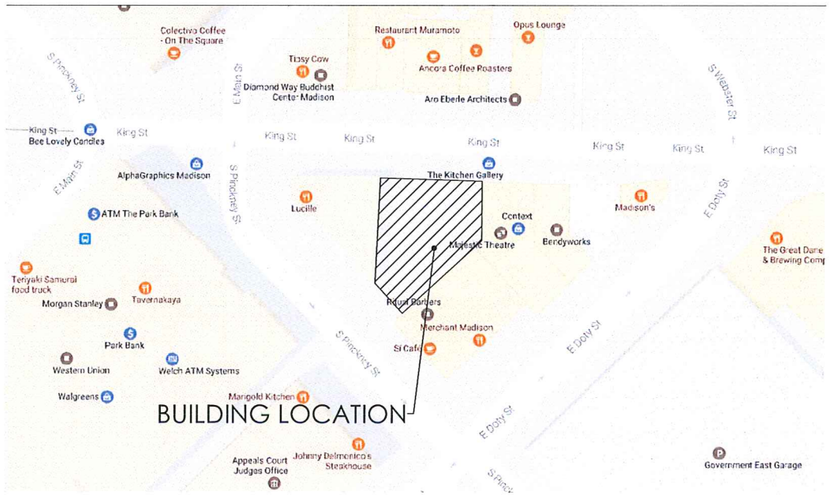

KEYPLAN
NOT TO SCALE

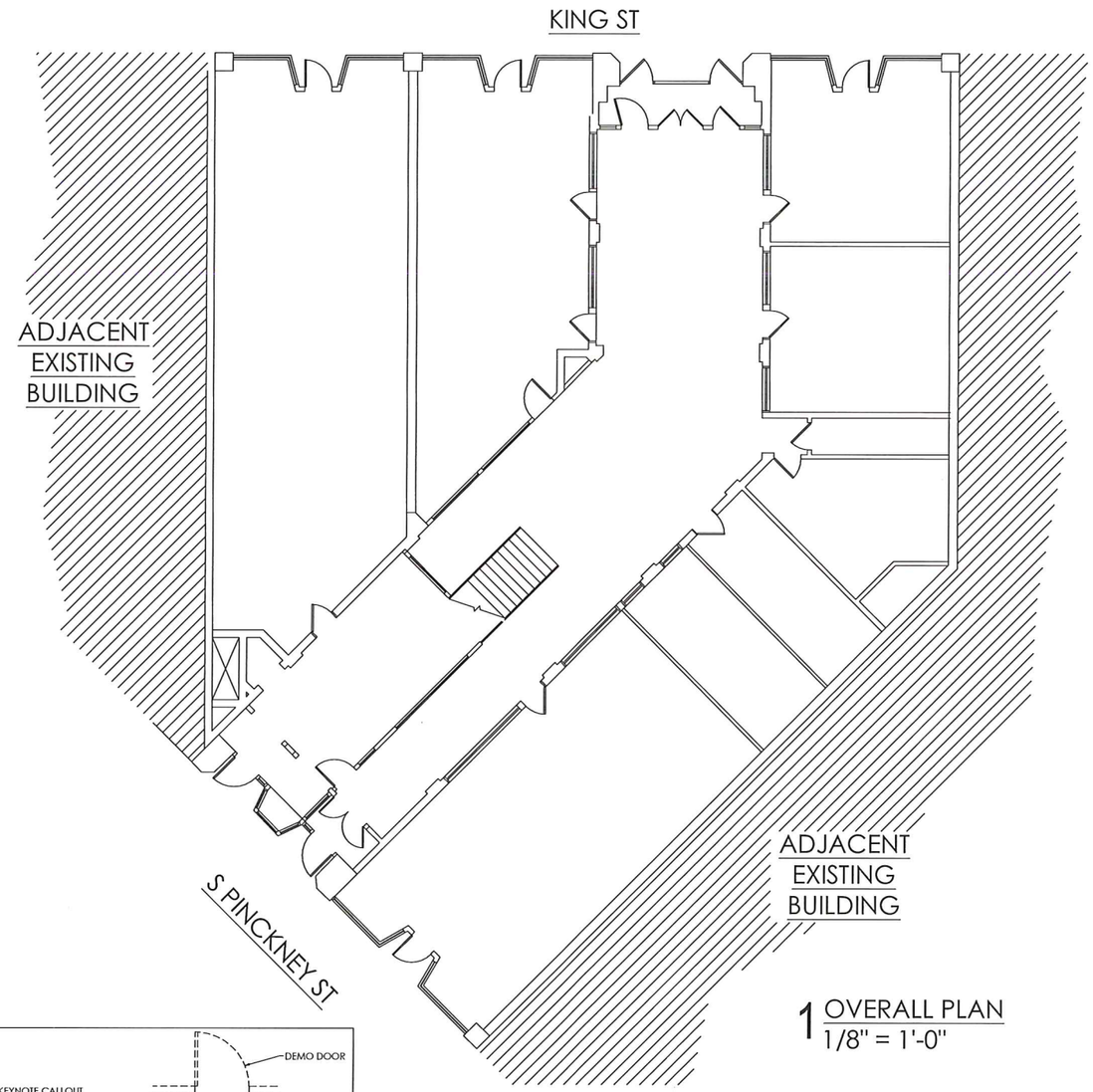

1 OVERALL PLAN
1/8" = 1'-0"

DEFINITIONS:

AFF	ABOVE FINISHED FLOOR
ACT	ACOUSTICAL CEILING TILE
AL/ALUM	ALUMINUM
BLDG	BUILDING
CAB	CABINET
CPT	CARPET
CSWK	CASEWORK
CLG	CEILING
CL	CENTERLINE
CM	CONSTRUCTION MANAGEMENT
COOR	COORDINATE
DEMO	DEMOLITION
DBL	DOUBLE
EW	EACH WAY
ELEV	ELEVATION
EQ	EQUAL
XTG	EXISTING
FRP	FIBERGLASS REINFORCED PLASTIC
FEC	FIRE EXTINGUISHER CABINET
FD	FLOOR DRAIN
FLUOR	FLUORESCENT
FOIC	FURNISHED BY OWNER, INSTALLED BY CONTRACTOR
FOIO	FURNISHED BY OWNER, INSTALLED BY OWNER
GA	GAUGE
GC	GENERAL CONTRACTOR
GL	GLASS
GWB	GYPSUM WALL BOARD
HDWD	HARDWARE
HVAC	HEATING, VENTILATION, AND AIR CONDITIONING
HGT	HEIGHT
HM	HOLLOW METAL
MEP	MECHANICAL, ELECTRICAL, PLUMBING
MTL	METAL
NIC	NOT IN CONTRACT
NTS	NOT TO SCALE
OVHG	OVERHANG
PT	PAINT
PLAM	PLASTIC LAMINATE
REQ	REQUIRED
SS	STAINLESS STEEL
TYP	TYPICAL
UON	UNLESS OTHERWISE NOTED
VIF	VERIFY IN FIELD
WDB	WOOD BASE
WD	WOOD/WOOD VENEER

SYMBOL LEGEND:

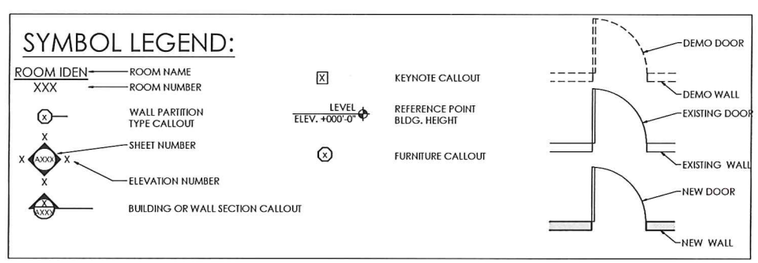

ARCHITECT:
DESTREE DESIGN ARCHITECTS, INC.
222 WEST WASHINGTON AVE. SUITE 310
MADISON, WI 53703
PH: 608.268.1499
FAX: 608.268.1498
WWW.DESTREEARCHITECTS.COM

SHEET INDEX:

TITLE
T000 COVER

ARCHITECTURAL
A100 PLANS
A300 EXTERIOR ELEVATIONS
A301 EXTERIOR ELEVATIONS

DESTREE
architecture & design
222 WEST WASHINGTON AVE. SUITE 310
MADISON, WI 53703
PH: 608.268.1499
www.Destreearchitects.com

DESTREE DESIGN ARCHITECTS, INC. HOLDS ALL RIGHTS INCLUDING THE COPYRIGHT OF THIS DOCUMENT, AS WELL AS THE CONCEPTS AND DESIGNS INCORPORATED HEREIN AS AN INSTRUMENT OF SERVICE. AS PROPERTY OF DESTREE DESIGN ARCHITECTS, INC. IT IS NOT TO BE COPIED, DISTRIBUTED, OR USED IN WHOLE OR PART WITHO T THE EXPRESS WRITTEN CONSENT OF DESTREE DESIGN ARCHITECTS, INC.

KING STREET ARCADE
FACADE RENOVATION
107-111 KING STREET & 111-117 S PINCKNEY ST
MADISON, WI

ISSUANCES:
LANDMARKS/UDC 06.19.17

Schematic Design Phase:
This drawing indicates the scale and relationship of the project components. This drawing is not for construction.

PROJECT #: 170427.00
SHEET NUMBER
T000

GENERAL NOTES

1. SEE T000 FOR OVERALL FLOOR PLAN
2. SEE 1/A301 FOR PROPOSED ENTRY ALTERNATE ELEVATION

KEYNOTES - FLOOR PLAN

1 ROUGH IN FOR FUTURE ADA OPERATOR

2 XTG DR REMAIN OPEN

3 NEW DOOR

4 NEW 40" DOOR

KEYNOTES - DEMO PLAN

A DEMO WALL

B DEMO DOOR

C DEMO WINDOW

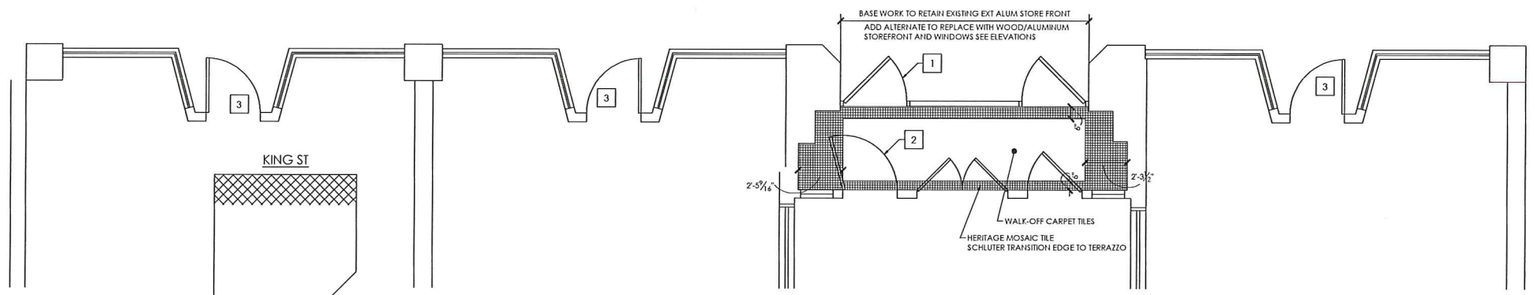

KEY PLAN

N

1 FLOOR PLAN
1/4" = 1'-0" @ 24"X36"

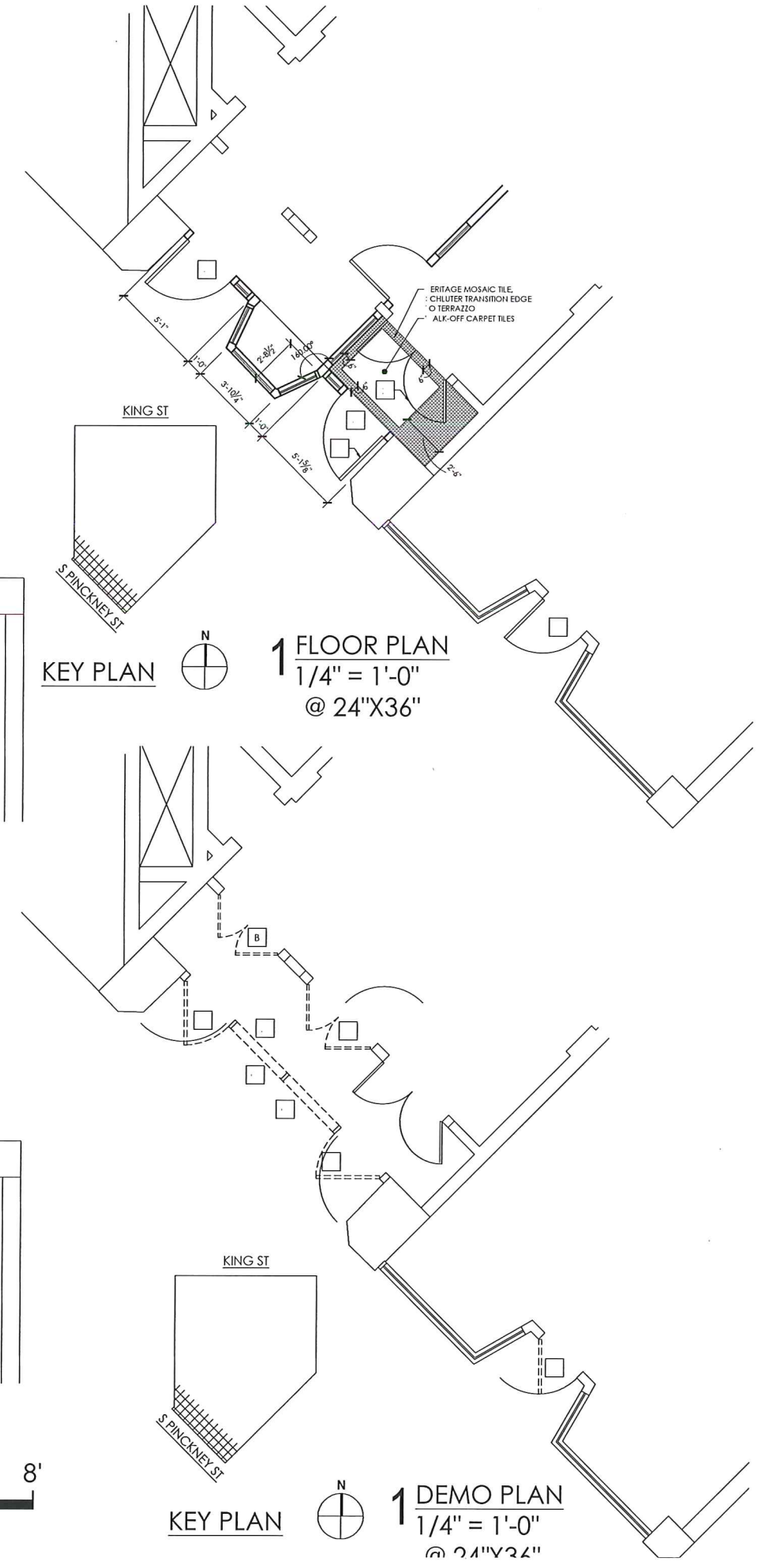

KEY PLAN

N

1 FLOOR PLAN
1/4" = 1'-0"
@ 24"X36"

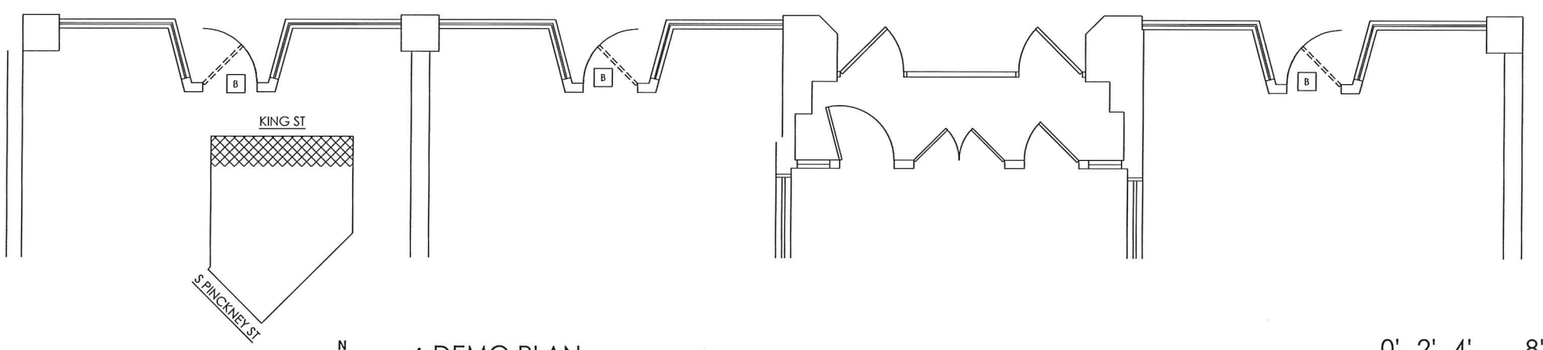

KEY PLAN

N

1 DEMO PLAN
1/4" = 1'-0" @ 24"X36"

0' 2' 4' 8'

KEY PLAN

N

1 DEMO PLAN
1/4" = 1'-0"
@ 24"X36"

DESTREE
architecture & design

222 WEST WASHINGTON AVE. SUITE 310
MADISON, WI 53703
PH: 608.268.1499
www.Destreearchitects.com

DESTREE DESIGN ARCHITECTS, INC. HOLDS ALL RIGHTS INCLUDING THE COPYRIGHT OF THIS DOCUMENT, AS WELL AS THE CONCEPTS AND DESIGNS INCORPORATED HEREIN AS AN INSTRUMENT OF SERVICE. AS PROPERTY OF DESTREE DESIGN ARCHITECTS, INC. IT IS NOT TO BE COPIED, DISTRIBUTED, OR USED IN WHOLE OR PART WITHO T THE EXPRESS WRITTEN CONSENT OF DESTREE DESIGN ARCHITECTS, INC.

KING STREET ARCADE
FACADE RENOVATION
107-111 KING STREET & 111-117 S PINCKNEY ST
MADISON, WI

ISSUANCES:

LANDMARKS/UDC 06.19.17

Schematic Design Phase:

This drawing indicates the scale and relationship of the project components. This drawing is not for construction.

PROJECT #: 170427.00

SHEET NUMBER

A100

GENERAL NOTES

1. SEE T000 FOR OVERALL FLOOR PLAN
2. SEE 1/A301 FOR PROPOSED ENTRY ALTERNATE ELEVATION

NOTES:
1. GC TO REMOVE ALL EXPOSED CONDUIT AND WIRING AT STOREFRONTS
2. SEE RENDERING FOR PAINT SCHEME
3. INSTALL HISTORIC 'HOTEL' PLAQUE AT INTERIOR OF ARCADE, OWNER TO DETERMINE LOCATION

2 KING STREET ELEVATION - PROPOSED
1/4" = 1'-0" @ 24"X36"

1 KING STREET ELEVATION - DEMO
1/4" = 1'-0" @ 24"X36"

0' 2' 4' 8'

DESTREE
architecture & design

222 WEST WASHINGTON AVE. SUITE 310
MADISON, WI 53703
PH: 608.248.1499
www.Destreearchitects.com

DESTREE DESIGN ARCHITECTS, INC. HOLDS ALL RIGHTS INCLUDING THE COPYRIGHT OF THIS DOCUMENT, AS WELL AS THE CONCEPTS AND DESIGNS INCORPORATED HEREIN AS AN INSTRUMENT OF SERVICE. AS PROPERTY OF DESTREE DESIGN ARCHITECTS, INC. IT IS NOT TO BE COPIED, DISTRIBUTED, OR USED IN WHOLE OR PART WITHO T THE EXPRESS WRITTEN CONSENT OF DESTREE DESIGN ARCHITECTS, INC.

KING STREET ARCADE
FACADE RENOVATION
107-111 KING STREET & 111-117 S PINCKNEY ST
MADISON, WI

ISSUANCES:

LANDMARKS/UDC 06.19.17
—
—
—
—
—
—
—
—
—
—
—

Schemalic Design Phase:

This drawing indicates the scale and relationship of the project components. This drawing is not for construction.

PROJECT #: 170427.00

SHEET NUMBER

A300

3 S PINCKNEY ST ELEVATION - PROPOSED
1/4" = 1'-0" @ 24"X36"

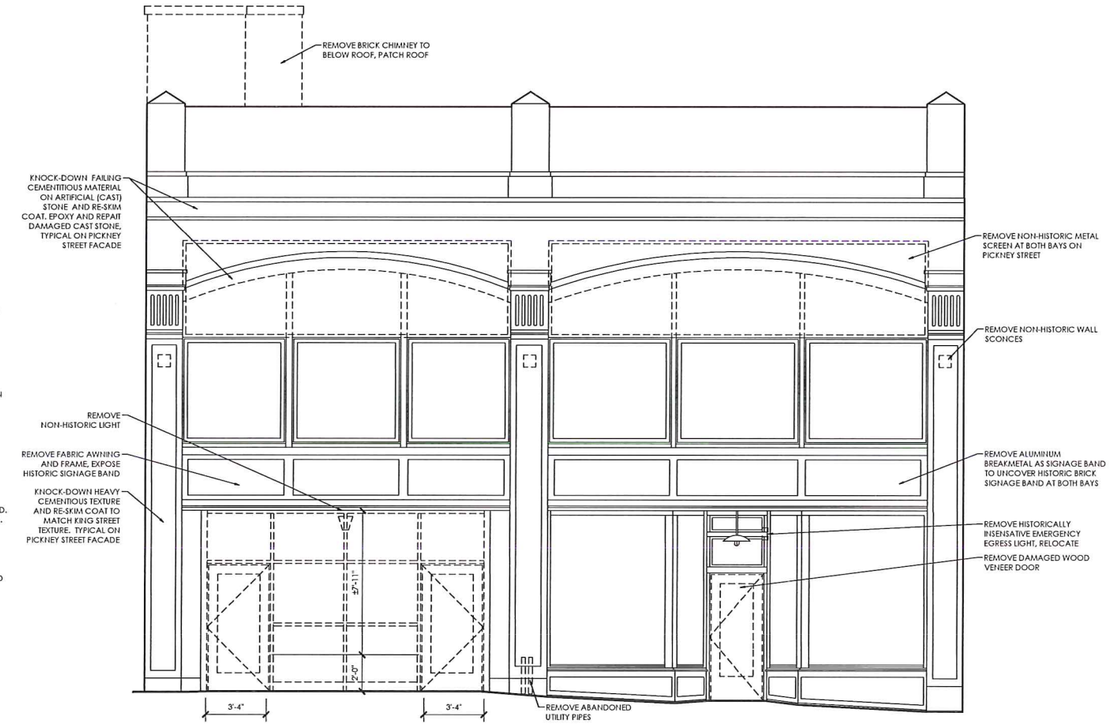

2 S PINCKNEY ST ELEVATION - DEMO
1/4" = 1'-0" @ 24"X36"

1 KING STREET ELEVATION - PROPOSED ENTRY ALTERNATE

0' 2' 4' 8'

DESTREE
architecture & design
222 WEST WASHINGTON AVE. SUITE 310
MADISON, WI 53703
PH: 608.248.1499
www.Destreearchitects.com

DESTREE DESIGN ARCHITECTS, INC. HOLDS ALL RIGHTS INCLUDING THE COPYRIGHT OF THIS DOCUMENT, AS WELL AS THE CONCEPTS AND DESIGNS INCORPORATED HEREIN AS AN INSTRUMENT OF SERVICE. AS PROPERTY OF DESTREE DESIGN ARCHITECTS, INC., IT IS NOT TO BE COPIED, DISTRIBUTED, OR USED IN WHOLE OR PART WITHO T THE EXPRESS WRITTEN CONSENT OF DESTREE DESIGN ARCHITECTS, INC.

KING STREET ARCADE FACADE RENOVATION

107-111 KING STREET & 111-117 S PINCKNEY ST
MADISON, WI

ISSUANCES:

LANDMARKS/UDC 06.19.17

Schematic Design Phase:

This drawing indicates the scale and relationship of the project components. This drawing is not for construction.

PROJECT #: 170427.00

SHEET NUMBER

A301

Ashley Norton

ARCHITECTURAL HARDWARE

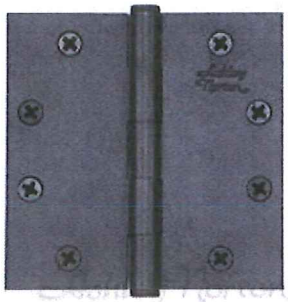

HIN-F-BAL HIN-F-ACR HIN-F-STP

HIN4545

Shown in dark bronze patina
4 ½ " x 4 ½ "
0.134" thickness
Supplied with #12 x 1 ¼" screws

Hinge supplied with flat ends but can be ordered with any one of the finials as shown below the hinge

Options

Available in 3 standard patinas, with your choice of levers or knobs.
Visit www.ashleynorton.com to view more options.

(973) 835-4027 ashleynorton.com info@ashleynorton.com

Ashley Norton

ARCHITECTURAL HARDWARE

Available Patina Options

Dark Bronze (BZ)

Light Bronze (LT)

White Bronze (WL)

(973) 835-4027 ashleynorton.com info@ashleynorton.com

Lighting Options

https://www.acuitybrands.com/products/detail/249156/Antique-Street-Lamps/EAB5-Wall-Brackets/Eurotique-EAB5-Large-Pendant-Wall-Brackets-Cast-Aluminum

https://www.rejuvac

enation.com/catalog/products/medford $170 on sale

Product Specifications

Specification	Detail
Item #	A1950
Web Configuration ID	4f830e60e694aa13aa00003e
Finish	Black Enamel
Socket Type	Incandescent
Selected Shade(s)	B9164 OP 10 in
Max Wattage Per Socket	100 W
UL Listing	UL Listed Wet
Canopy Width	6-3/4"
Overall Width	12.18"
Overall Length	15.53"
Overall Projection	18.7"
Shade Height	9"

Exterior and Interior Vestibule:

https://brasslightgallery.com/lighting/carlton-one-light-semi-flush-ceiling-fixture-with-3-14-shade-holder

Finish black

Hardware

Dark Bronze Ashley Norton

http://www.ashleynorton.com/product-details/Tubular-Entrysets-SQLES-Escutcheon.aspx

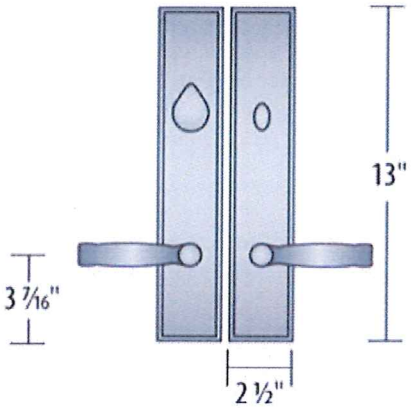

Lever Colonial #490 with 13" backplate and dead bolt at retail entry doors. 8" high bronze kick plate both sides, flat head screws, Bronze hinges with round finial. Coordinating Push/Pull #1155 with deadbolt on Arcade entry doors.

Colonial (490) lever

5 3/8" length

Shown in dark bronze patina

1155 Pull Handle

15" x 2 3/8"

Shown in dark bronze patina

http://www.baldwinhardware.com/products/details/accessories/door-accessories/kick-plate-2000-102

Entry doors:

Andersen Rectangular #193 or equal – 2 ¼" red oak, beveled glass – custom Size, ORB closers

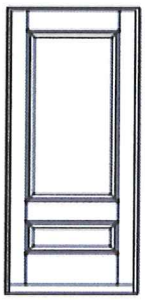

193

Stain Dark Oak satin – Sikkens

Pickney Street Facade

SW 2839
SW 7530
SW 0024
SW 7068
SW 6992

King Street Facade

SW 7530
SW 0024
SW 7068
SW 6992