City of Madison

Conditional Use and Demoltion

Location
2901 Dryden Drive

Project Name
McDonald's Dryden Remodel

Applicant
McDonald's Corp/
Joel Jackson - Bishop Engineering

Existing Use
McDonald's restaurant

Proposed Use
Demolish street-facing façade as part of remodeling of restaurant and modifications to vehicle access sales and service window

Public Hearing Date
Plan Commission
08 August 2016

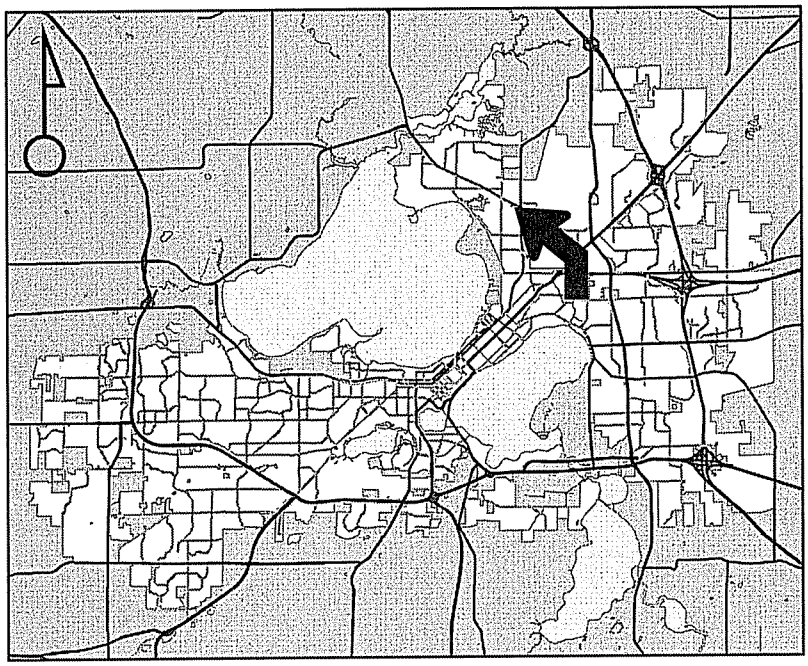

For Questions Contact: Jessica Vaughn at: 267-8733 or jvaughn@cityofmadison.com or City Planning at 266-4635

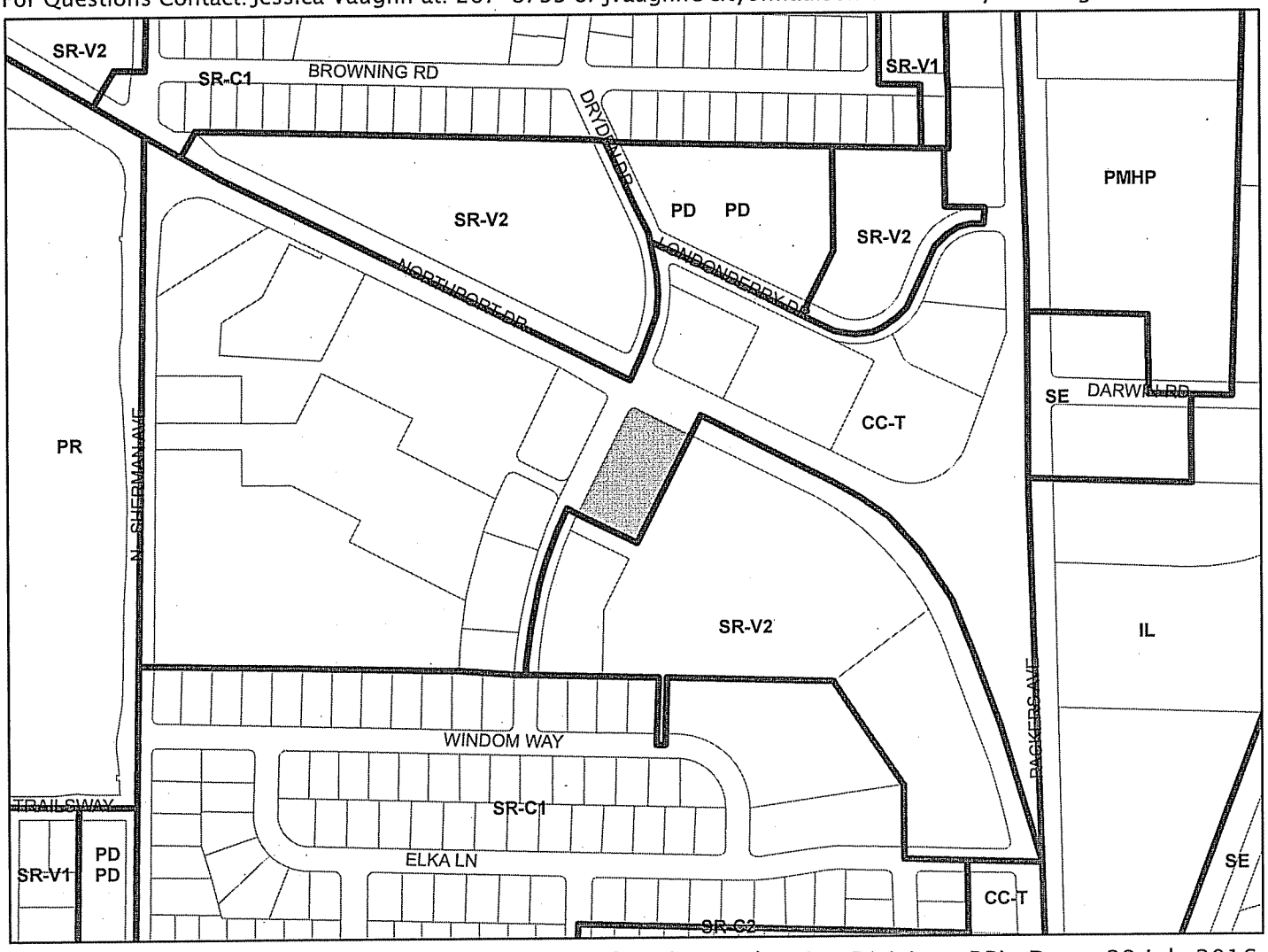

Scale : 1" = 400'

City of Madison, Planning Division : RPJ : Date : 29 July 2016

City of Madison

2901 Dryden Drive

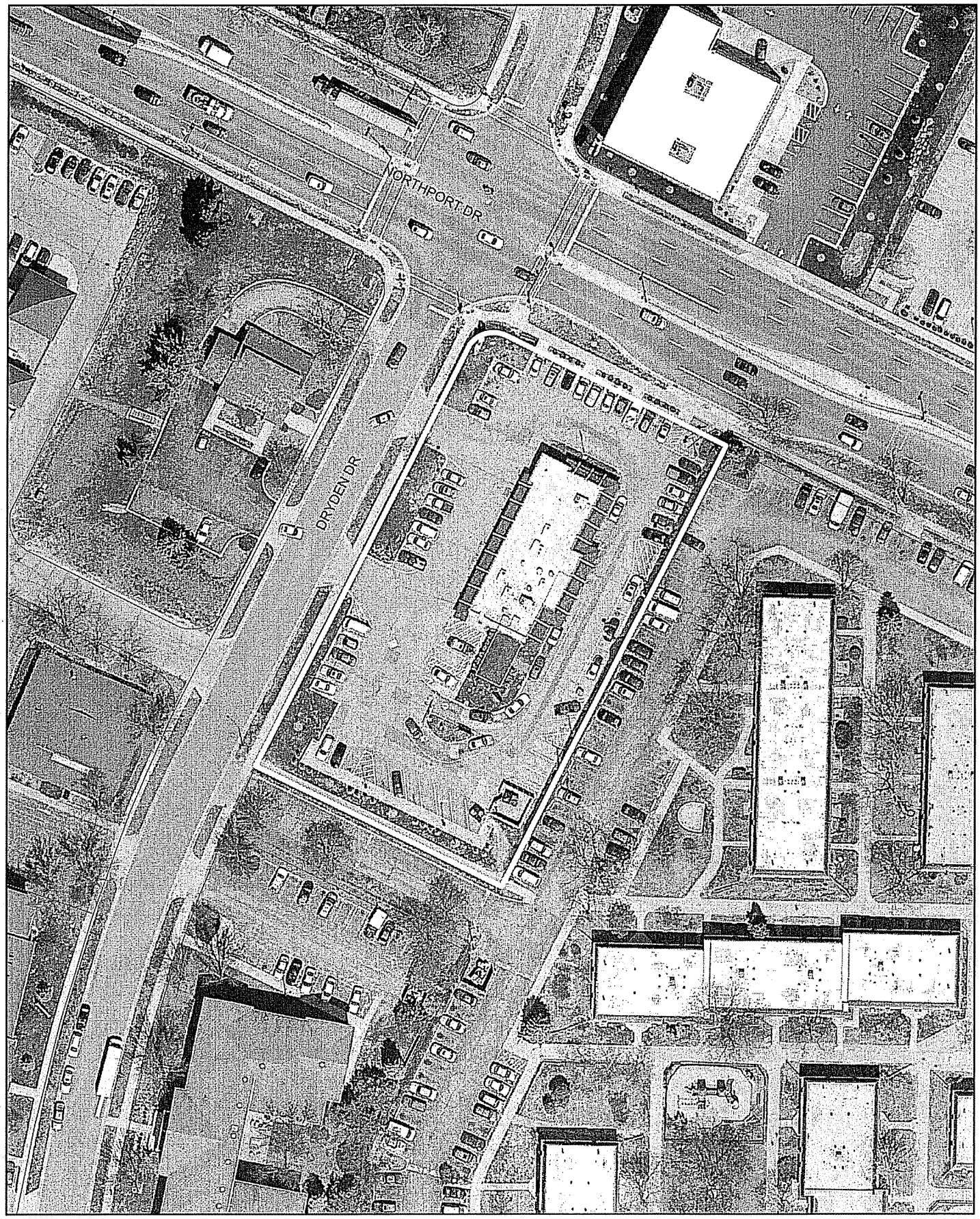

Date of Aerial Photography : Spring 2013

LAND USE APPLICATION

CITY OF MADISON

215 Martin Luther King Jr. Blvd; Room LL-100
PO Box 2985; Madison, Wisconsin 53701-2985
Phone: 608.266.4635 | Facsimile: 608.267.8739

- All Land Use Applications should be filed with the Zoning Administrator at the above address.
- The following information is required for all applications for Plan Commission review except subdivisions or land divisions, which should be filed using the Subdivision Application.
- This form may also be completed online at: www.cityofmadison.com/developmentcenter/landdevelopment

FOR OFFICE USE ONLY:
Amt. Paid 600 Receipt No. 017974-0010
Date Received 6/29/16
Received By JK
Parcel No. 0810-303-0101-4
Aldermanic District 12 - Larry Palm
Zoning District CC-T
Special Requirements CU
Review Required By:
☐ Urban Design Commission ☐ Plan Commission
☐ Common Council ☐ Other: _____

Form Effective: February 21, 2013

1. **Project Address:** 2901 Dryden Drive
   Project Title (if any): McDonald's Dryden Remodel Project

2. **This is an application for** (Check all that apply to your Land Use Application):

   ☐ **Zoning Map Amendment from** _____ to _____

   ☐ **Major Amendment to Approved PD-GDP Zoning** ☐ **Major Amendment to Approved PD-SIP Zoning**

   ☐ **Review of Alteration to Planned Development (By Plan Commission)**

   ☒ **Conditional Use, or Major Alteration to an Approved Conditional Use**

   ☒ **Demolition Permit**

   ☐ **Other Requests:** _____

3. **Applicant, Agent & Property Owner Information:**

Applicant Name: Vicky Stadther Company: McDonald's
Street Address: 1650 W. 82nd St #900 City/State: Bloomington, MN Zip: 55431
Telephone: (612) 275-5559 Fax: ( ) N/A Email: vicky.stadther@us.mcd.com

Project Contact Person: Joel Jackson Company: Bishop Engineering
Street Address: 3501 104th St City/State: Urbandale, IA Zip: 50322
Telephone: (515) 276-0467 Fax: ( ) N/A Email: jjackson@bishopengr.com

Property Owner (if not applicant): McDonald's Corp c/o Missoula Mac Inc
Street Address: N3250 County Rd J City/State: Poynette, WI Zip: 53955

4. **Project Information:**

Provide a brief description of the project and all proposed uses of the site: Remodel Existing Building, remove playplace, make walks & drives ADA compliant, re-brand drive-thru.

Development Schedule: Commencement Sept 2016 Completion Nov 2016

5. Required Submittal Information

All Land Use applications are required to include the following:

→ Land use summary table
Bike parking

☒ **Project Plans** including:*

- Site Plans (fully dimensioned plans depicting project details including all lot lines and property setbacks to buildings; demolished/proposed/altered buildings; parking stalls, driveways, sidewalks, location of existing/proposed signage; HVAC/Utility location and screening details; useable open space; and other physical improvements on a property)
- Grading and Utility Plans (existing and proposed)
- Landscape Plan (including planting schedule depicting species name and planting size)
- Building Elevation Drawings (fully dimensioned drawings for all building sides, labeling primary exterior materials)
- Floor Plans (fully dimensioned plans including interior wall and room location)

Provide collated project plan sets as follows: → seating plan

2 copies ~~Seven (7) copies~~ of a full-sized plan set drawn to a scale of 1 inch = 20 feet (folded or rolled and stapled)

- ~~Twenty Five (25) copies~~ of the plan set reduced to fit onto 11 X 17-inch paper (folded and stapled)
- ~~One (1) copy~~ of the plan set reduced to fit onto 8 ½ X 11-inch paper

" x 17"

* For projects requiring review by the **Urban Design Commission**, provide ***Fourteen (14) additional 11x17 copies*** of the plan set. In addition to the above information, all plan sets should also include: 1) Colored elevation drawings with shadow lines and a list of exterior building materials/colors; 2) Existing/proposed lighting with photometric plan & fixture cutsheet; and 3) Contextual site plan information including photographs and layout of adjacent buildings and structures. The applicant shall bring samples of exterior building materials and color scheme to the Urban Design Commission meeting.

☒ **Letter of Intent: Provide one (1) Copy per Plan Set** describing this application in detail including, but not limited to:

- Project Team
- Existing Conditions
- Project Schedule
- Proposed Uses (and ft^2 of each)
- Hours of Operation
- Building Square Footage
- ~~Number of Dwelling~~ Units
- Auto and Bike Parking Stalls
- Lot Coverage & Usable Open Space Calculations
- ~~Value of~~ Land
- ~~Estimated Project Cost~~
- ~~Number of Construction & Full-Time Equivalent Jobs Created~~
- ~~Public Subsidy Requested~~

☒ **Filing Fee:** Refer to the Land Use Application Instructions & Fee Schedule. Make checks payable to: *City Treasurer.* $600.00

☒ **Electronic Submittal:** All applicants are required to submit copies of all items submitted in hard copy with their application as Adobe Acrobat PDF files on a non-returnable CD to be included with their application materials, or by e-mail to *pcapplications@cityofmadison.com*.

☐ **Additional Information** may be required, depending on application. Refer to the Supplemental Submittal Requirements.

6. Applicant Declarations

☐ **Pre-application Notification:** The Zoning Code requires that the applicant notify the district alder and any nearby neighborhood and business associations **in writing** no later than **30 days prior to FILING this request**. List the alderperson, neighborhood association(s), and business association(s) AND the dates you sent the notices:

_____

→ If a waiver has been granted to this requirement, please attach any correspondence to this effect to this form.

☒ **Pre-application Meeting with Staff:** Prior to preparation of this application, the applicant is required to discuss the proposed development and review process with Zoning and Planning Division staff; note staff persons and date.

Planning Staff: JLV *Date:* 6/13/16 *Zoning Staff:* Jenny Kirchgatter *Date:* 6/13/16

The applicant attests that this form is accurately completed and all required materials are submitted:

Name of Applicant Vicky Stadther Relationship to Property: McDonald's Construction Manager

Authorizing Signature of Property Owner V Stadther Date 6-13-16

Bishop Engineering
"Planning Your Successful Development"
3501 104th Street
Des Moines, Iowa 50322-3825
Phone: (515)276-0467 Fax: (515)276-0217

June 27th, 2016

City of Madison, Wisconsin Permit Counter
Attn: Jenny Kirchgatter
Assistant Zoning Administrator
215 Martin Luther King, Jr. Blvd Ste. LL-100
Madison, WI 53703

Re: Letter of Intent for McDonald's: 2901 Dryden Drive

Dear Ms. Kirchgatter,

McDonald's Corporation is proposing improvements for the McDonald's restaurant located at 2901 Dryden Drive. The improvements will include maintenance of the parking lot and bringing the site up to ADA compliance for both sidewalks and ADA stall slopes. In addition, the building will be remodeled with a new façade the removal of the existing playplace off the front of the current building.

As part of this renovation, the function of the site will not change. The hours at this location will also stay the same with the lobby being open 5:00am-11:00pm and the drive-thru open 24-hours a day.

Summary of renovations:

ADA Modifications:
Currently the site sidewalks and handicap parking are not ADA compliant with current standards. This is because the site was constructed prior to the federal ADA code of 1992 being enacted. In making the site compliant, sidewalk will be removed and replaced, a connection to the public sidewalk on Northport Drive will be added and ADA stalls will be moved and repaved to makes all slopes less than the 2% maximum slope requirement.

Maintenance:
As part of this project, there are several areas of the parking lot that need maintenance. The drive-thru areas and ADA stalls will be replaced with concrete and the remainder of the parking lot will get a new asphalt overlay and new parking lot stripes.

Building Remodel:
Both the interior and exterior of the existing building will be remodeled. In addition the existing playplace on the front of the building will be removed. New building elevations are being proposed to remove the mansard roof from the building to refresh the building. As part of the remodel, McDonald's has seen a shift in demographics on this store and a large reduction in sales of Happy Meals over the years. That said, this store no longer justifies having a playplace as part of this location and is using the remodel opportunity to remove the playplace. It shall be noted there is an additional McDonald's located 4 miles away at 4020 Milwaukee Street that has a playplace.

Sincerely,

Joel Jackson, PE

McDonald's

McDonald's

McDonald's

MCDONALD'S - MADISON, WI - DRYDEN DR.
SITE PLAN

SHEET INDEX:

C0.1	COVER SHEET
C0.2	SITE SURVEY
C1.1	DEMO PLAN
C2.1	LAYOUT PLAN
C2.2-C2.6	DRIVE THRU PLANS
C3.1	GRADING PLAN
C5.1	LANDSCAPE PLAN

PROPERTY DESCRIPTION:
LOT THIRTEEN (13), BLOCK SIX (6), 1ST ADDITION TO BRUNS, IN THE CITY OF MADISON, COUNTY OF DANE, STATE OF WISCONSIN.

ADDRESS:
2901 DRYDEN DRIVE
MADISON, WI 53704-3009

OWNER:
MCDONALD'S CORP % MISSOULA MAC INC
N3250 COUNTY RD J
POYNETTE, WI 53955-9256

PREPARED FOR:
MCDONALD'S USA, LLC
ATTN: VICKY STADTHER
1650 W 82ND ST., SUITE 900
BLOOMINGTON, MN 55431
PH: (952) 884-4355

ZONING:
CC-T - COMMERCIAL CORRIDOR - TRANSITIONAL DISTRICT

PARKING REQUIREMENTS:
CAR MINIMUM REQUIREMENT: 15% OF THE CAPACITY OF PERSONS
CAR MAXIMUM REQUIREMENT: 40% OF THE CAPACITY OF PERSONS
BICYCLE MINIMUM REQUIREMENT: 5% OF THE CAPACITY OF PERSONS

MINIMUM CAR PARKING = 92x15% = 14 STALLS
MAXIMUM CAR PARKING 92x40% = 37 STALLS
MINIMUM BICYCLE PARKING = 92x5% = 5 STALLS

CAR PARKING PROVIDED = 37 STALLS (INCL 2 HC STALLS)
BICYCLE PARKING PROVIDED = 6 STALLS

BENCHMARK:
ELEVATIONS ON THE SURVEY ARE REFERENCED TO THE NORTH AMERICAN VERTICAL DATUM OF 1988 BASED ON A BENCHMARK ELEVATION OF 857.02 ON THE BRASS CAP MONUMENT AT THE EAST 1/4 CORNER OF SECTION 36, T8N, R9E AS PROVIDED BY THE CITY OF MADISON.

GENERAL NOTES:

1. ALL WORK SHALL BE DONE IN ACCORDANCE WITH CITY OF MADISON STANDARD SPECIFICATIONS AND ANY AND ALL CITY/COUNTY SUPPLEMENTAL SPECIFICATIONS. THE CITY OF MADISON MUST BE NOTIFIED BY ALL CONTRACTORS 48 HOURS PRIOR TO COMMENCING WORK.
2. THE CONTRACTOR SHALL BE RESPONSIBLE FOR THE LOCATION OF ALL UTILITIES. ANY DAMAGE TO SAID UTILITIES SHALL BE REPAIRED AT THE CONTRACTORS EXPENSE.
3. ALL WORK SHALL BE DONE IN ACCORDANCE WITH THE CURRENT O.S.H.A. CODES AND STANDARDS. NOTHING INDICATED ON THESE PLANS SHALL RELIEVE THE CONTRACTOR FROM COMPLYING WITH THE APPROPRIATE SAFETY REGULATIONS.
4. ALL NECESSARY CONSTRUCTION SIGNS, BARRICADES AND OTHER TRAFFIC CONTROL DEVICES REQUIRED DURING CONSTRUCTION WILL BE FURNISHED BY THE CONTRACTOR. SIGNS, BARRICADES AND OTHER TRAFFIC CONTROL DEVICES MUST BE IN CONFORMANCE WITH THE "MANUAL ON UNIFORM TRAFFIC CONTROL DEVICES FOR STREETS AND HIGHWAYS."
5. BISHOP ENGINEERING SHALL NOT BE LIABLE FOR ANY INJURIES THAT HAPPEN ON SITE. THIS SHALL INCLUDE BUT NOT BE LIMITED TO TRENCH COLLAPSES FROM VARYING SOIL CONDITIONS OR INJURIES CAUSED BY UNDERGROUND UTILITIES INCLUDING UTILITIES THAT ARE NOT SHOWN ON PLAN.
6. THE CONTRACTOR IS LIABLE FOR ALL DAMAGES TO PUBLIC OR PRIVATE PROPERTY CAUSED BY THEIR ACTION OR INACTION IN PROVIDING FOR STORM WATER FLOW DURING CONSTRUCTION. DO NOT RESTRICT FLOWS IN EXISTING DRAINAGE CHANNELS, STORM SEWER, OR FACILITIES.
7. THE CONTRACTOR SHALL SUBMIT TO THE ENGINEER A SCHEDULE FOR PERFORMANCE OF WORK ITEMS. THIS SCHEDULE SHALL BE PROVIDED BY THE CONTRACTOR AT THE PROJECT PRECONSTRUCTION CONFERENCE. NO WORK SHALL BEGIN UNTIL A SCHEDULE HAS BEEN SUBMITTED AND ACCEPTED. THE CONTRACTOR SHALL THEN PERFORM WORK TO CONFORM TO THE ACCEPTED SCHEDULE.
8. LABORATORY TESTS SHALL BE PERFORMED BY THE OWNER UNLESS OTHERWISE NOTED. THE CONTRACTOR SHALL PROVIDE SAMPLES OF MATERIAL REQUIRED FOR LABORATORY TESTS AND TESTING IN ACCORDANCE WITH THE URBAN STANDARD SPECIFICATIONS FOR PUBLIC IMPROVEMENTS.
9. SOIL IMPORT OR EXPORT ON THIS PROJECT SHALL BE CONSIDERED INCIDENTAL AND WILL NOT BE MEASURED OR PAID FOR SEPARATELY.
10. THE CONTRACTOR SHALL PROTECT ALL STRUCTURES NOT SHOWN AS REMOVALS ON THE PLANS.
11. THE CONTRACTOR SHALL OBTAIN ANY AND ALL NECESSARY PERMITS PRIOR TO ANY CONSTRUCTION.
12. GRADING AND EROSION CONTROL SHALL BE DONE IN ACCORDANCE WITH THE APPROVED EROSION CONTROL PLAN AND ANY AND ALL CITY, COUNTY OR STATE REQUIREMENTS.
13. THE CONTRACTOR SHALL PICK UP ANY DEBRIS SPILLED ONTO THE ADJACENT RIGHT OF WAY OR ABUTTING PROPERTIES AS THE RESULT OF CONSTRUCTION, AT THE END OF EACH WORK DAY.
14. THE CONTRACTOR IS RESPONSIBLE FOR THE PROMPT REMOVAL OF ALL MUD THAT HAS BEEN TRACKED OR WASHED UNTO ADJACENT PROPERTY OR RIGHT OF WAY UNTIL SUCH TIME THAT PERMANENT VEGETATION HAS BEEN ESTABLISHED.
15. DISPOSE OF ALL EXCESS MATERIALS AND TRASH IN ACCORDANCE WITH FEDERAL, STATE, AND LOCAL REQUIREMENTS. PROVIDE WASTE AREAS OR DISPOSAL SITES FOR EXCESS MATERIALS NOT DESIRABLE FOR INCORPORATION INTO THE PROJECT.
16. THE CONTRACTOR SHALL COORDINATE THE ADJUSTMENT OF ANY AND ALL EXISTING AND PROPOSED UTILITIES TO PROPOSED GRADES. EXISTING UTILITIES SHALL BE RAISED OR LOWERED IN ACCORDANCE WITH THE UTILITY OWNER REQUIREMENTS. ANY NECESSARY ADJUSTMENTS SHALL BE CONSIDERED INCIDENTAL TO CONSTRUCTION.
17. ACTIVE EXISTING FIELD TILES ENCOUNTERED DURING CONSTRUCTION SHALL BE REPAIRED, REROUTED, OR CONNECTED TO PUBLIC OR PRIVATE STORM SEWER TO REMAIN IN SERVICE.

PAVING NOTES:

1. SEE DETAILS FOR ALL PAVEMENT THICKNESS.
2. ALL WALKS, PARKING LOTS, HANDICAP PARKING, RAMPS, ETC. SHALL COMPLY WITH ALL A.D.A. AND CITY CODES. HANDICAP PARKING SIGNAGE IS REQUIRED FOR ALL HANDICAP STALLS AND SHALL BE CONSIDERED INCIDENTAL. IN EVENT OF A DISCREPANCY BETWEEN THE PLANS AND THE A.D.A./CITY CODES THE A.D.A./CITY CODES SHALL GOVERN. CONTRACTOR SHALL BE RESPONSIBLE FOR ENSURING A.D.A. CODES ARE MET.

UTILITY CONFLICT NOTES:

1. UTILITY CONFLICTS MAY EXIST ACROSS THE SITE WITH NEW UTILITIES, GRADING, PAVING ETC. MOST UTILITY CONFLICTS HAVE BEEN CALLED OUT FOR CONTRACTOR CONVENIENCE.
2. CONTRACTOR IS RESPONSIBLE FOR ALL UTILITY CONFLICTS THAT ARE EITHER CALLED OUT ON THE PLANS OR THAT CAN BE SEEN ON THE PLANS BETWEEN AND EXISTING UTILITY AND PROPOSED CONSTRUCTION

SURVEY NOTES:

1. SURVEY WORK WAS COMPLETED BY NOTBOHM MICHAELS SURVEYING INC ON MAY 9TH, 2016. SEE SITE SURVEY PROVIDED AS PART OF THIS SET OF PLANS FOR EXISTING SITE CONDITIONS AND BOUNDARY INFORMATION.

LAND USE SUMMARY TABLE		
SITE AREA	49,902 square feet	
	EXISTING	PROPOSED
BUILDING AREA		
First Floor	5,512	4,282
Basement		
Screened Porch		
Garage		
Total	5,512	4,282
LOT COVERAGE (sidewalks >5', driveways, building footprint, covered porches, etc.)	38,682	37,762
OPEN SPACE (landscape areas, sidewalks <5', paver patios, decks, etc.)	11,220	12,140

SUBGRADE PREP NOTES:

SHAPE AND CONSOLIDATE SUBGRADE IN PREPARATION FOR THE PLACEMENT OF PAVEMENT.
A. UNIFORM COMPOSITION: PROVIDE UNIFORM COMPOSITION OF AT LEAST 12 INCHES BELOW TOP OF SUBGRADE UNDER NEW PAVING OR SUBBASE, PLUS 2 FEET ON EACH SIDE. USE SELECT SUBGRADE MATERIALS (SEE NOTES) UNLESS GRANULAR STABILIZATION MATERIALS OR SUBGRADE TREATMENT IS SPECIFIED.
1. SUBGRADE COMPACTION IN FILL SECTIONS:
A. FOLLOW THE COMPACTION WITH MOISTURE AND DENSITY CONTROL REQUIREMENTS.
B. CONSTRUCT IN TWO 6 INCH LIFTS.
2. SUBGRADE COMPACTION IN CUT SECTIONS:
A. EXCAVATE AND STOCKPILE THE TOP 6 INCHES OF SUBGRADE.
B. SCARIFY, MIX, AND RE-COMPACT THE NEXT 6 INCHES OF SUBGRADE.
C. REPLACE, MIX, AND COMPACT THE TOP 6 INCHES OF SUBGRADE.
3. REMOVE STONES OVER 3 INCHES FROM SUBGRADE.
4. CONSTRUCT TO ELEVATION AND CROSS-SECTION SUCH THAT, AFTER ROLLING, SURFACE WILL BE ABOVE REQUIRED SUBGRADE ELEVATION.
B. SUBGRADE STABILITY:
1. PERFORM PROOF ROLLING WITH A TRUCK LOADED TO THE MAXIMUM SINGLE LEGAL AXLE GROSS WEIGHT OF 20,000 POUNDS OR THE MAXIMUM TANDEM AXLE GROSS WEIGHT OF 34,000 POUNDS. OPERATE TRUCKS AT LESS THAN 10 MPH. MAKE MULTIPLE PASSES FOR EVERY LANE. THE SUBGRADE WILL BE CONSIDERED TO BE UNSTABLE IF, UNDER THE OPERATION OF THE LOADED TRUCK, THE SURFACE SHOWS YIELDING (SOIL WAVE IN FRONT OF THE LOADED TIRES) OR RUTTING OF MORE THAN 2 INCHES, MEASURED FROM THE TOP TO THE BOTTOM OF THE RUT AT THE OUTSIDE EDGES.
2. IF SOFT OR YIELDING AREAS ARE LOCATED, REMOVE UNSTABLE MATERIALS AND REPLACE WITH SUITABLE FOUNDATION MATERIALS AS APPROVED BY THE SOILS ENGINEER. COMPACT SUBGRADE MATERIALS IN CUT SECTIONS AS REQUIRED BY THE SOILS ENGINEER. IF STABILIZATION MATERIAL IS USED, PLACE AND COMPACT AS REQUIRED FOR SUBBASE.
C. FINAL SUBGRADE: COMPLETE FINAL SUBGRADE BY EXCAVATION TO GRADE BY USE OF STEEL-SHOD TEMPLATE SUPPORTED ON SIDE FORMS, SUPPORT ROLLERS, OR BY USE OF AN AUTOMATICALLY-CONTROLLED SUBGRADE EXCAVATING MACHINE.
D. SUBGRADE CHECK: CHECK SUBGRADE ELEVATION AND GRADE BY METHOD APPROVED BY ENGINEER PRIOR TO PAVING.
E. RUTS: IF RUTS OR OTHER OBJECTIONABLE IRREGULARITIES FORM IN SUBGRADE DURING CONSTRUCTION, RE-SHAPE AND RE-ROLL SUBGRADE BEFORE PLACING PAVEMENT. FILL RUTS OR OTHER DEPRESSIONS WITH MATERIAL SIMILAR TO OTHER SUBGRADE MATERIAL, AND COMPACT.

SUBGRADE MATERIALS NOTES:

1. ALL SOILS REQUIRED FOR SELECT SUBGRADE MATERIALS MUST BE APPROVED BY THE SOILS ENGINEER. APPROVAL OF MATERIALS AND THEIR USE WILL BE BASED ON AASHTO M 145.
A. COHESIVE SOILS MUST MEET ALL OF THE FOLLOWING REQUIREMENTS:
1) 45% OR LESS SILT SIZE FRACTION.
2) DENSITY OF 110 PCF OR GREATER ACCORDING TO ASTM D 698 OR AASHTO T 99 (STANDARD PROCTOR DENSITY).
3) PLASTICITY INDEX GREATER THAN 10.
4) A-6 OR A-7-6 SOILS OF GLACIAL ORIGIN.
B. GRANULAR SOILS MUST MEET ALL OF THE FOLLOWING REQUIREMENTS:
1) DENSITY OF 110 PCF OR GREATER ACCORDING TO ASTM D 698 OR AASHTO T 99 (STANDARD PROCTOR DENSITY).
2) 15% OR LESS SILT AND CLAY.
3) PLASTICITY INDEX OF 3 OR LESS.
4) A-1, A-2, OR A-3 (0).
2. CRUSHED STONE, CRUSHED PCC, CRUSHED COMPOSITE PAVEMENT, OR RAP, MIXTURES OF GRAVEL, SAND, AND SOIL; OR UNIFORMLY-BLENDED COMBINATIONS OF THE ABOVE; AS APPROVED BY THE SOILS ENGINEER.
3. THE SOILS ENGINEER MAY AUTHORIZE A CHANGE IN SELECT SUBGRADE MATERIALS SUBJECT TO MATERIALS AVAILABLE LOCALLY AT TIME OF CONSTRUCTION.

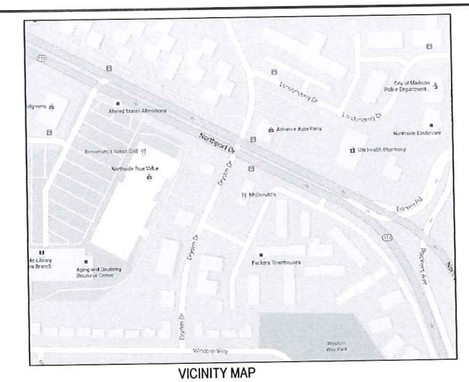

VICINITY MAP
SCALE: 1" = 300'

LEGEND:

—SAN—	SANITARY SEWER
—ST—	STORM SEWER
—W—	WATER LINE
—G—	GAS LINE
—U/E—	UNDERGROUND ELECTRIC
—O/E—	OVERHEAD ELECTRIC
—TELE—	TELEPHONE LINE
—F/O—	FIBER OPTIC
—CATV—	CABLE TV
	STORM MANHOLE
	CURB INTAKE
	SURFACE INTAKE
	FLARED END SECTION
	SANITARY MANHOLE
	CLEANOUT
	FIRE HYDRANT
	SPRINKLER
	IRRIGATION CONTROL VALVE
	WATER MANHOLE
	WELL
	WATER VALVE
	WATER SHUT OFF
	YARD HYDRANT
	ELECTRIC MANHOLE
	ELECTRIC METER
	ELECTRIC RISER
	ELECTRIC VAULT
	POWER POLE
	TRANSFORMER POLE
	LIGHT POLE
	ELECTRIC JUNCTION BOX
	ELECTRIC PANEL
	TRANSFORMER
	GROUND LIGHT
	GUY WIRE
	ELECTRIC HANDHOLE
	GAS METER
	GAS VALVE
	AIR CONDITIONING UNIT
	TELEPHONE RISER
	TELEPHONE VAULT
	TELEPHONE MANHOLE
	TRAFFIC SIGNAL MANHOLE
	FIBER OPTIC RISER
	FIBER OPTIC FAULT
	CABLE TV RISER
	SIGN
	DENOTES NUMBER OF PARKING STALLS
	PROPERTY CORNER - FOUND AS NOTED
	PROPERTY CORNER- PLACED 3/4" IRON PIPE WITH YELLOW PLASTIC CAP ID #14775
	SECTION CORNER - FOUND AS NOTED
	PROPERTY ADDRESS

ABBREVIATIONS:

AC	ACRES
ASPH	ASPHALT
BK	BOOK
CONC	CONCRETE
D	DEEDED DISTANCE
EX	EXISTING
ENCL	ENCLOSURE
FF	FINISHED FLOOR
FL	FLOW LINE
FRAC	FRACTIONAL
M	MEASURED DISTANCE
MH	MANHOLE
OPC	ORANGE PLASTIC CAP
P	PLATTED DISTANCE
PG	PAGE
POB	POINT OF BEGINNING
POC	POINT OF COMMENCEMENT
PRA	PREVIOUSLY RECORDED AS
PUE	PUBLIC UTILITY EASEMENT
ROW	RIGHT OF WAY
RPC	RED PLASTIC CAP
SF	SQUARE FEET
SAN	SANITARY
TYP	TYPICAL
YPC	YELLOW PLASTIC CAP
N	NORTH
S	SOUTH
E	EAST
W	WEST

Know what's Below. Call before you dig.

UTILITY NOTE:
THE LOCATION OF THE UTILITIES INDICATED ON THE PLANS HAVE BEEN TAKEN FROM THE FIELD SURVEY, EXISTING PUBLIC RECORDS, AND PLANS PROVIDED BY OTHERS. SURFACE UTILITY LOCATIONS HAVE BEEN FIELD LOCATED BY BISHOP ENGINEERING, UNLESS OTHERWISE NOTED. ALL UNDERGROUND UTILITY LOCATIONS ARE APPROXIMATE LOCATIONS ONLY. BISHOP ENGINEERING DOES NOT GUARANTEE THE UNDERGROUND LOCATION OF ANY UTILITIES SHOWN. IT SHALL BE THE DUTY OF THE CONTRACTOR TO DETERMINE THE LOCATION AND DEPTH OF ANY UNDERGROUND UTILITIES SHOWN AND IF ANY ADDITIONAL UTILITIES, OTHER THAN THOSE SHOWN ON THE PLANS, MAY BE PRESENT. A REQUEST WAS MADE TO IOWA ONE CALL FOR UTILITY PROVIDERS TO VERIFY, LOCATE, AND MARK THEIR UTILITIES IN THE FIELD.

COPYRIGHT 2016 BISHOP ENGINEERING. THIS DOCUMENT AND THE INFORMATION CONTAINED MAY NOT BE REPRODUCED OR EXCERPTED WITHOUT THE EXPRESS WRITTEN PERMISSION OF BISHOP ENGINEERING. UNAUTHORIZED COPYING OR DISCLOSURE OF CONSTRUCTION USE ARE PROHIBITED BY COPYRIGHT LAW.

I HEREBY CERTIFY THAT THESE PLANS HAVE BEEN PREPARED UNDER MY SUPERVISION AND THAT TO THE BEST OF MY KNOWLEDGE, THE SAME COMPLY WITH ALL RULES, REGULATIONS AND ORDINANCES OF THE CITY OF MADISON RELATING TO STRUCTURES AND BUILDINGS.

MY LICENSE RENEWAL DATE IS: JULY 31, 2016

JOEL E. JACKSON WI REG# E-42545 6/28/2016 DATE

PAGES OR SHEET COVERED BY THIS SEAL: C0.1, C1.1 - C5.1

WISCONSIN
JOEL E. JACKSON
E-42545
URBANDALE, IA
PROFESSIONAL ENGINEER

REV	DATE	DESCRIPTION	BY
1	6/9/16	1ST CITY SUBMITTAL	JMR

PREPARED BY:
Bishop Engineering
"Planning Your Successful Development"
3501 104th Street
Des Moines, Iowa 50322-3825
Phone: (515)276-0467 Fax: (515)276-0217
Civil Engineering & Land Surveying Established 1959

PREPARED FOR:
McDonald's USA, LLC

© 2016 McDonald's USA, LLC
These drawings and specifications are the confidential and proprietary property of McDonald's USA, LLC and shall not be copied or reproduced without written authorization. The contract documents were prepared for use on this specific project by Bishop Engineering. Bishop Engineering does not warrant the suitability of these documents for use on a different site or at a later time. Use of these drawings for reference or example on another project requires the express written consent of Bishop Engineering. Any reuse of or modifications to the contract documents for reuse on another project is not authorized.

DRAWN BY	REVIEWED BY	SHEET NO.
JMR	JEJ	C0.1
STD SHEET DATE	DATE ISSUED	
6/9/16	6/9/16	

TITLE: MADISON, WI
SITE PLAN
DESCRIPTION: COVER SHEET
SITE ID: 48010 1
SITE ADDRESS: 2901 DRYDEN DR.
BE# 120337

6/28/2016 2:34:02 PM M:\LAND PROJECTS 2012\120337 MADISON, WI - DRYDEN\DWG\C0 COVER.DWG

PLAT OF SURVEY

DESCRIPTION: Lot Thirteen (13), Block Six (6), 1ST ADDITION TO BRUNS, in the City of Madison, County of Dane, State of Wisconsin

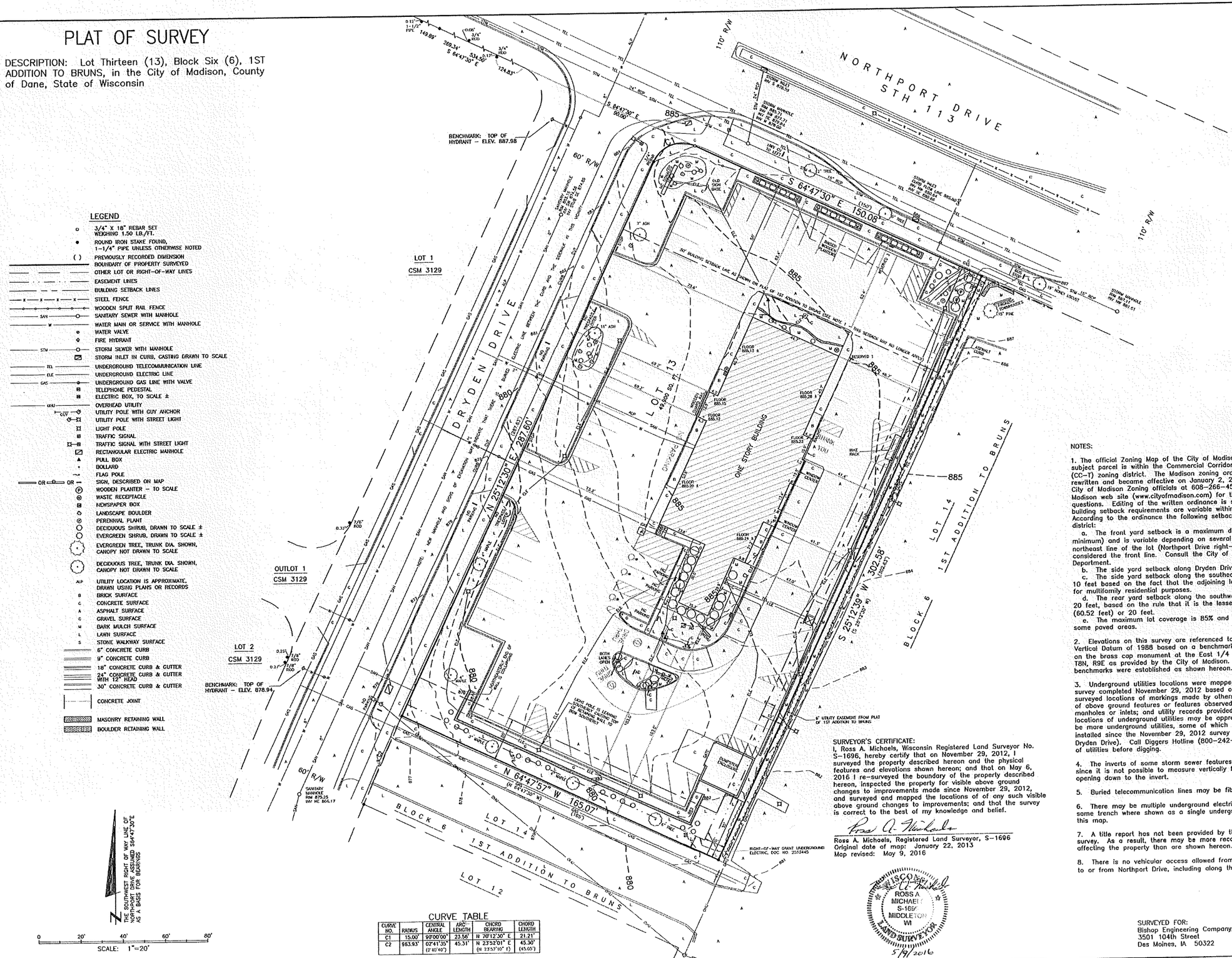

LEGEND

- 3/4" X 18" REBAR SET WEIGHING 1.50 LB./FT.
- ROUND IRON STAKE FOUND, 1-1/4" PIPE UNLESS OTHERWISE NOTED
- ( ) PREVIOUSLY RECORDED DIMENSION
- BOUNDARY OF PROPERTY SURVEYED
- OTHER LOT OR RIGHT-OF-WAY LINES
- EASEMENT LINES
- BUILDING SETBACK LINES
- STEEL FENCE
- WOODEN SPLIT RAIL FENCE
- SAN — SANITARY SEWER WITH MANHOLE
- W — WATER MAIN OR SERVICE WITH MANHOLE
- WATER VALVE
- FIRE HYDRANT
- STM — STORM SEWER WITH MANHOLE
- STORM INLET IN CURB, CASTING DRAWN TO SCALE
- TEL — UNDERGROUND TELECOMMUNICATION LINE
- ELE — UNDERGROUND ELECTRIC LINE
- GAS — UNDERGROUND GAS LINE WITH VALVE
- TELEPHONE PEDESTAL
- ELECTRIC BOX, TO SCALE ±
- OHW — OVERHEAD UTILITY
- GUY — UTILITY POLE WITH GUY ANCHOR
- UTILITY POLE WITH STREET LIGHT
- LIGHT POLE
- TRAFFIC SIGNAL
- TRAFFIC SIGNAL WITH STREET LIGHT
- RECTANGULAR ELECTRIC MANHOLE
- PULL BOX
- BOLLARD
- FLAG POLE
- OR — SIGN, DESCRIBED ON MAP
- WOODEN PLANTER – TO SCALE
- WASTE RECEPTACLE
- NEWSPAPER BOX
- LANDSCAPE BOULDER
- PERENNIAL PLANT
- DECIDUOUS SHRUB, DRAWN TO SCALE ±
- EVERGREEN SHRUB, DRAWN TO SCALE ±
- EVERGREEN TREE, TRUNK DIA. SHOWN, CANOPY NOT DRAWN TO SCALE
- DECIDUOUS TREE, TRUNK DIA. SHOWN, CANOPY NOT DRAWN TO SCALE
- ALP — UTILITY LOCATION IS APPROXIMATE, DRAWN USING PLANS OR RECORDS
- B — BRICK SURFACE
- C — CONCRETE SURFACE
- A — ASPHALT SURFACE
- G — GRAVEL SURFACE
- M — BARK MULCH SURFACE
- L — LAWN SURFACE
- S — STONE WALKWAY SURFACE
- 6" CONCRETE CURB
- 9" CONCRETE CURB
- 18" CONCRETE CURB & GUTTER
- 24" CONCRETE CURB & GUTTER WITH 13" HEAD
- 30" CONCRETE CURB & GUTTER
- CONCRETE JOINT
- MASONRY RETAINING WALL
- BOULDER RETAINING WALL

THE SOUTHWEST RIGHT OF WAY LINE OF NORTHPORT DRIVE ASSUMED S64°47'30"E AS A BASIS FOR BEARINGS

CURVE TABLE

CURVE NO.	RADIUS	CENTRAL ANGLE	ARC LENGTH	CHORD BEARING	CHORD LENGTH
C1	15.00'	90°00'00"	23.56'	N 70°12'30" E	21.21'
C2	983.93'	02°41'35" (2°40'40")	46.31'	N 23°52'01" E (N 23°53'10" E)	46.30' (46.05')

SURVEYOR'S CERTIFICATE:

I, Ross A. Michaels, Wisconsin Registered Land Surveyor No. S-1696, hereby certify that on November 29, 2012, I surveyed the property described hereon and the physical features and elevations shown hereon; and that on May 6, 2016 I re-surveyed the boundary of the property described hereon, inspected the property for visible above ground changes to improvements made since November 29, 2012, and surveyed and mapped the locations of of any such visible above ground changes to improvements; and that the survey is correct to the best of my knowledge and belief.

Ross A. Michaels

Ross A. Michaels, Registered Land Surveyor, S-1696
Original date of map: January 22, 2013
Map revised: May 9, 2016

WISCONSIN ROSS A MICHAELS S-1696 MIDDLETON WI LAND SURVEYOR
5/9/2016

NOTES:

1. The official Zoning Map of the City of Madison indicates the subject parcel is within the Commercial Corridor – Transition District (CC-T) zoning district. The Madison zoning ordinance was recently rewritten and became effective on January 2, 2013. Please consult City of Madison Zoning officials at 608-266-4551 and the City of Madison web site (www.cityofmadison.com) for the ordinance and questions. Editing of the written ordinance is still ongoing. Some building setback requirements are variable within this district. According to the ordinance the following setbacks apply in the CC-T district:
   a. The front yard setback is a maximum distance (not a minimum) and is variable depending on several variables. The northeast line of the lot (Northport Drive right-of-way) is considered the front line. Consult the City of Madison Zoning Department.
   b. The side yard setback along Dryden Drive is zero.
   c. The side yard setback along the southeast line of the lot is 10 feet based on the fact that the adjoining lot is zoned and used for multifamily residential purposes.
   d. The rear yard setback along the southwest side of the lot is 20 feet, based on the rule that it is the lesser of 20% of lot depth (60.52 feet) or 20 feet.
   e. The maximum lot coverage is 85% and includes buildings and some paved areas.

2. Elevations on this survey are referenced to the North American Vertical Datum of 1988 based on a benchmark elevation of 857.02 on the brass cap monument at the East 1/4 corner of Section 36, T8N, R9E as provided by the City of Madison. Additional benchmarks were established as shown hereon.

3. Underground utilities locations were mapped hereon as part of a survey completed November 29, 2012 based on the following: surveyed locations of markings made by others; observed evidence of above ground features or features observed in structures such as manholes or inlets; and utility records provided by others. The locations of underground utilities may be approximate. There may be more underground utilities, some of which may have been installed since the November 29, 2012 survey (see note along Dryden Drive). Call Diggers Hotline (800-242-8511) for a markup of utilities before digging.

4. The inverts of some storm sewer features are approximate since it is not possible to measure vertically from the structure opening down to the invert.

5. Buried telecommunication lines may be fiber optic.

6. There may be multiple underground electric lines within the same trench where shown as a single underground electric line on this map.

7. A title report has not been provided by the client for this survey. As a result, there may be more recorded easements affecting the property than are shown hereon.

8. There is no vehicular access allowed from the subject property to or from Northport Drive, including along the curve labeled "C1".

SURVEYED FOR:
Bishop Engineering Company, Inc.
3501 104th Street
Des Moines, IA 50322

REV	DATE	DESCRIPTION	BY

Northern Michigan Surveying Inc.
3111 Perlman Road
Madison, WI 53719
(608) 277-5003

OFFICE MAP NO. 1064-L

PREPARED BY:

©2013 McDonald's USA, LLC

PREPARED FOR: McDonald's USA, LLC

These drawings and specifications are the confidential and proprietary property of McDonald's USA, LLC, and shall not be copied or reproduced without written authorization, or used in connection with its issue date and are not suitable for use on a different site or at a later time. Use at the owner's or property licensed architects and engineers. Reproduction of the contract documents for reuse on another project is not authorized.

DRAWN BY: RAM
STD ISSUE DATE: 05/09/2016
REVIEWED BY: RAM
DATE ISSUED: 05/09/2016

TITLE: MADISON - DRYDEN DR
SITE PLAN

DESCRIPTION: SITE SURVEY

SITE ID: 480101
SITE ADDRESS: 2901 DRYDEN DRIVE, MADISON, WI 53704

SHEET NO. C0.2

BE# 20337

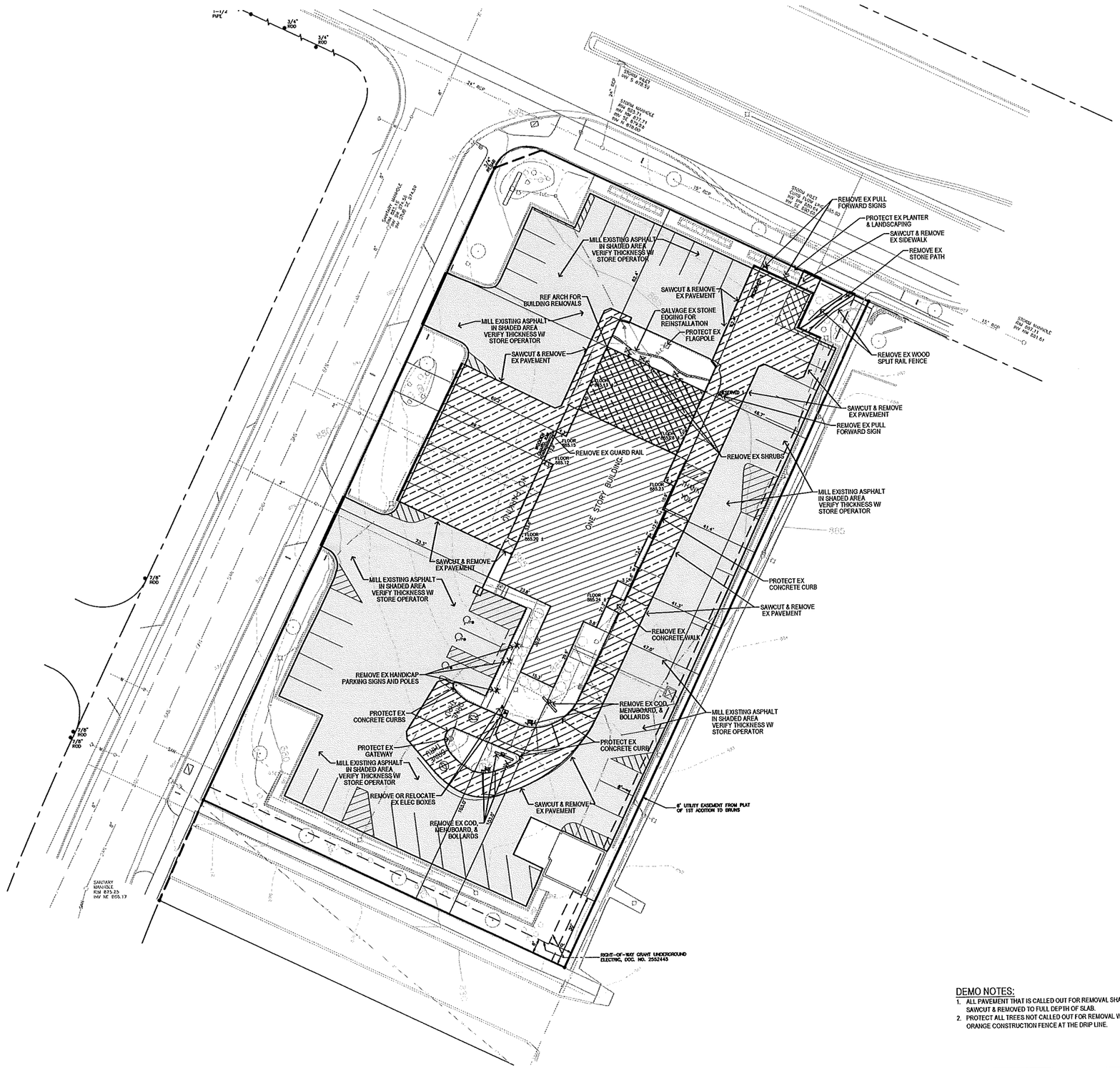

DEMO NOTES:

1. ALL PAVEMENT THAT IS CALLED OUT FOR REMOVAL SHALL BE SAWCUT & REMOVED TO FULL DEPTH OF SLAB.
2. PROTECT ALL TREES NOT CALLED OUT FOR REMOVAL WITH ORANGE CONSTRUCTION FENCE AT THE DRIP LINE.

REV	DATE	DESCRIPTION	BY
2	5/26/16	PERMIT SET	JMR
1	4/29/16	INITIAL CITY REVIEW	JMR

PREPARED BY:

Bishop Engineering
"Planning Your Successful Development"
3501 104th Street
Des Moines, Iowa 50322-3825
Phone: (515)276-4467 Fax: (515)276-0317
Civil Engineering & Land Surveying Established 1959

PREPARED FOR:

McDonald's USA, LLC

© 2016 McDonald's USA, LLC
These drawings and specifications are the confidential and proprietary property of McDonald's USA, LLC and shall not be copied or reproduced without written authorization. The contract documents were prepared in connection with the construction of a McDonald's restaurant at this site and are not suitable for use on a different site or at a later time. Use of these drawings for reference or example on another project requires the express written consent of McDonald's USA, LLC. Use of the contract documents for reuse on another project is not authorized.

DRAWN BY: JMR
STD ISSUE DATE: 4/29/16
REVIEWED BY: JEJ
DATE ISSUED: 4/29/16

TITLE: MADISON, WI
SITE PLAN
DESCRIPTION: DEMO PLAN

SITE ID: 480101
SITE ADDRESS: 2901 DRYDEN DR

SHEET NO. C1.1

BE# 120337

5/26/2016 1:39:23 PM M:\LAND PROJECTS 2012\120337 MADISON, WI - DRYDEN\DWG\C1 DEMO.DWG

GENERAL NOTES:

1. ALL DIMENSION ARE TO BACK OF CURB UNLESS NOTED OTHERWISE.

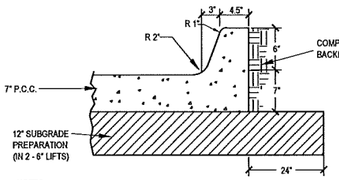

NOTES:
1. SLOPE GUTTER IN ACCORDANCE WITH GRADING PLAN.
2. INSTALL 24" WIDE CURB & GUTTER SECTION AS SHOWN ON PLAN.

PAVEMENT SECTION
NOT TO SCALE

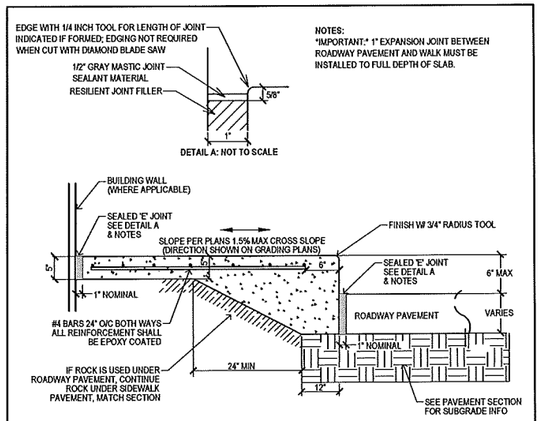

TURNED DOWN WALK DETAIL
NOT TO SCALE

NOTES:
1. SIDEWALK CROSS SLOPE SHALL BE 1.5% DESIGN, 2% MAX
2. RAMP RUNNING SLOPE SHALL BE 6.25% DESIGN, 8.33% MAX

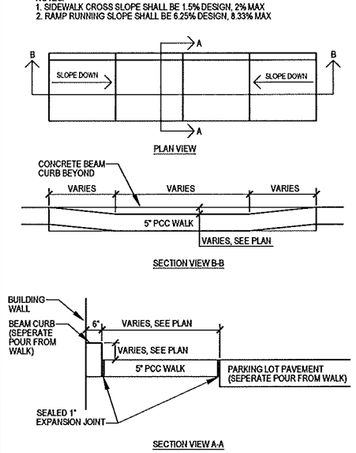

RAMP ALONG BUILDING DETAIL
NOT TO SCALE

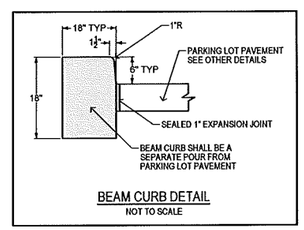

BEAM CURB DETAIL
NOT TO SCALE

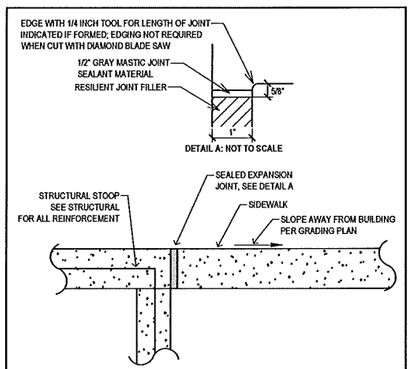

STRUCTURAL STOOP / SIDEWALK TRANSITION DETAIL
NOT TO SCALE

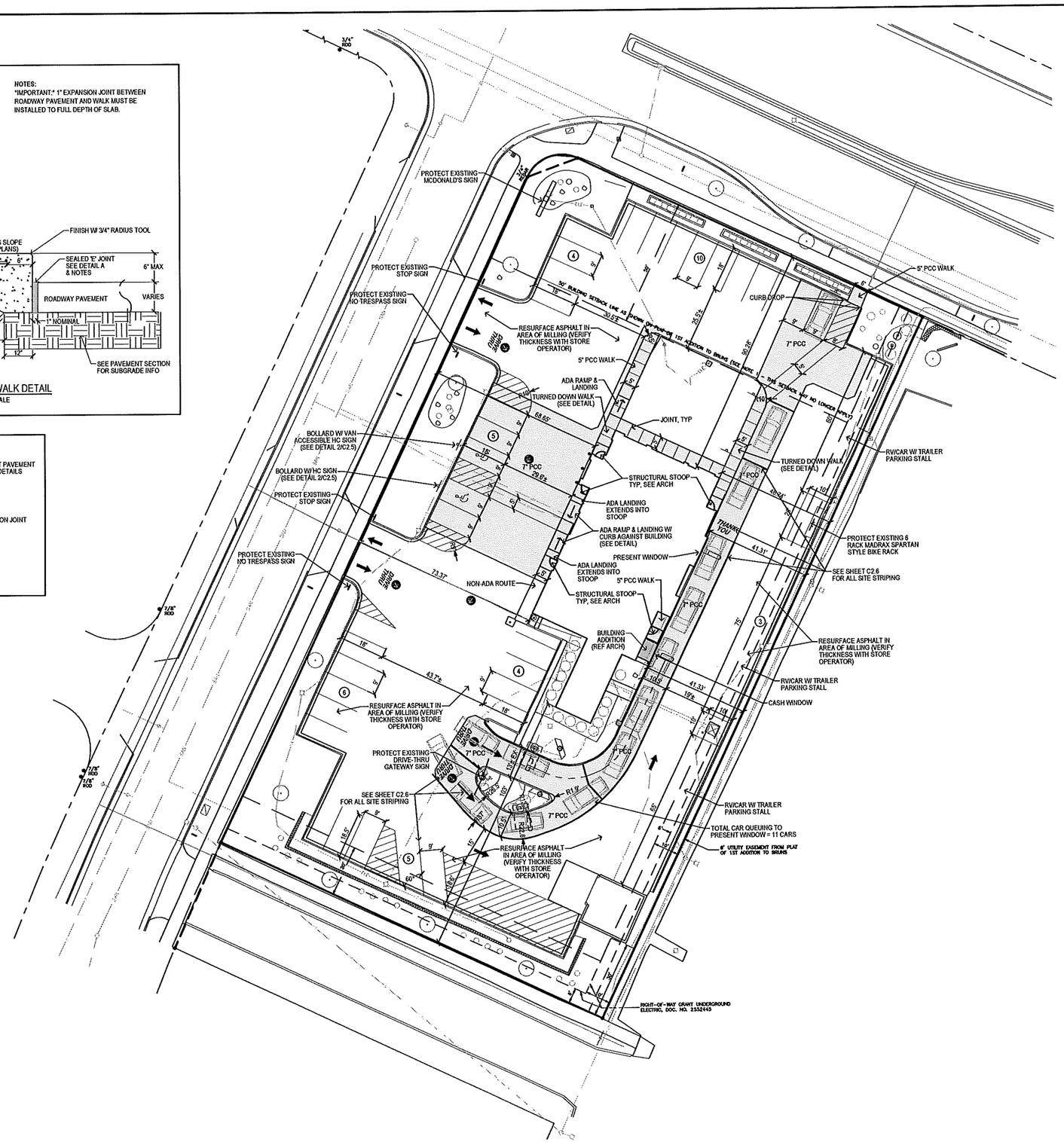

GRAPHIC SCALE
20 0 10 20 40

REV	DATE	DESCRIPTION	BY
2	4/28/16	PERMIT SET	JMR
1	4/07/16	INITIAL CITY REVIEW	JMR

PREPARED BY:
Bishop Engineering
"Planning Your Successful Development"
3501 104th Street
Des Moines, IA 50322-3325
Phone: 515/276-4467 Fax: 515/276-2317
Civil Engineering & Land Surveying Established 1959

PREPARED FOR:
McDonald's USA, LLC

© 2015 McDonald's USA, LLC
These drawings and specifications are the confidential and proprietary property of McDonald's USA, LLC and are not to be reproduced or disclosed without written authorization. The contract documents were prepared for use on this specific site in conjunction with a McDonald's restaurant. Any other use or reuse of these drawings (or reference or example on another project) requires the express written consent of McDonald's USA, LLC and payment of fees for services of property. Reproduction of the contract documents for reuse on another project is not authorized.

DRAWN BY: JMR
SITE/USE DATE: 4/28/16
REVIEWED BY: JEL
DATE REVISED: 4/28/16

TITLE: MADISON, WI SITE PLAN
DESCRIPTION: LAYOUT PLAN
SITE ID: 480101
SITE ADDRESS: 2901 DRYDEN DR

SHEET NO. C2.1
BE# 120337

6/28/2016 1:39:49 PM MULAND PROJECTS 2012\120337 MADISON, WI - DRYDEN\DWG\C2 LAYOUT.DWG

COD CONSTRUCTION NOTES:

(A) PROTECT EXISTING BEAM CURB IN PLACE. MATCH AND BLEND NEW PAVING INTO EXISTING WHERE OCCURS.

(B) INSTALL NEW MENU BOARD. SEE SHEET C2.3 FOR FOUNDATION DETAIL, SHEET C2.5 FOR SCHEMATIC DETAIL AND SEE MANUFACTURER FOR INSTALLATION INSTRUCTIONS.

(C) PRIMARY LANE HIGH IMPACT COD AND CANOPY. LOCATE 80'± FROM ℄ OF COD TO ℄ OF CASH WINDOW MEASURED ALONG ℄ OF TRAVEL PATH. SEE SHEET C2.3 FOR FOUNDATION DETAIL, SHEET C2.5 FOR SCHEMATIC DETAIL AND MANUFACTURER FOR INSTALLATION INSTRUCTIONS.

(D) SECONDARY LANE HIGH IMPACT COD AND CANOPY. LOCATE 14'-0" FROM NOSE OF CONCRETE ISLAND. SEE SHEET C2.3 FOR FOUNDATION DETAIL, SHEET C2.5 FOR SCHEMATIC DETAIL AND MANUFACTURER FOR INSTALLATION INSTRUCTIONS.

(E) INSTALL PRIMARY LANE DETECTOR LOOP. SEE DETAIL SHEET C2.4.

(F) INSTALL SECONDARY LANE DETECTOR LOOP 2'-0" FORWARD OF ℄ OF COD. FLIP LOOP FORWARD. SEE DETAIL SHEET C2.4.

(G) EXISTING DOUBLE ARM GATEWAY SIGN. PROTECT IN PLACE.

(H) LANDSCAPED AREA.

(I) ANY LANE ANY TIME SIGN. ATTACH SIGN TO GATEWAY 8' FROM BOTTOM OF POST. SEE SHEET C2.5 FOR SCHEMATIC DETAIL AND MANUFACTURER FOR INSTALLATION INSTRUCTIONS.

(J) INSTALL DETECTOR LOOPS AT CASH AND PRESENT WINDOWS. SEE DETAIL 1 SHEET C2.4.

(K) INSTALL BOLLARD AT THE CORNER OF THE BUILDING. BOLLARD SHALL BE FLUSH AGAINST THE BUILDING AND THE FACE OF THE BOLLARD SHALL BE TIGHT AGAINST THE BACK OF CURB. SEE DETAIL 4 ON SHEET C2.5.

(L) INSTALL PULL FORWARD SIGN & BOLLARD. SEE DETAIL 3 SHEET C2.5

(M) INSTALL COVER ON EXISTING BOLLARD TO MATCH BUILDING BASE. FOR COVER CONTACT:
PUGLESEA COMPANY
ATTN: BRAD ERICKSON
1253 CONNELLY AVE
ARDEN HILLS, MN 55112
PH: (651) 636-6442

GENERAL NOTES:

1. SIGNAGE & DRIVE-THRU ELEMENTS:
   COD, DRIVE-THRU PYLON/CLEARANCE POLE, BOLLARD SIGN, AND FREESTANDING MERCHANDIZER SHALL BE CONSISTENT WITH THE 2013 STANDARD BUILDING DESIGN DRIVE-THRU ELEMENTS. OTHER DESIGNS MAY NOT BE USED.
2. GENERAL CONTRACTOR SHALL COORDINATE WITH CIVIL PLANS, MCDONALD'S PROJECT MANAGER, AND SIGNAGE SUPPLIER TO DETERMINE THE EXACT LOCATION, ORIENTATION, MOUNTING HEIGHTS, AND NUMBER OF SIGNS AND OTHER DRIVE-THRU ELEMENTS TO BE INSTALLED AT THIS SITE. ALL WORK SHALL BE COORDINATED WITH OTHER TRADES.
3. CONTACT MCDONALD'S PROJECT MANAGER FOR SIGNAGE & DRIVE-THRU ELEMENT FOOTING AND WIRING REQUIREMENTS. SIGNAGE MANUFACTURER TO PROVIDE FOOTING ANCHORS & TEMPLATES TO G.C. PRIOR TO FOUNDATION POURING.
4. SEE SHEET C2.5 AND ELECTRICAL SHEETS FOR DRIVE-THRU WIRING INFORMATION.
5. GENERAL CONTRACTOR TO COORDINATE THE RESPONSIBILITES OF THE ELECTRICAL CONTRACTOR AND THE SIGN SUPPLIER.
6. GENERAL CONTRACTOR TO INSTALL PRE-FORMED, PRE-WIRED VEHICLE DETECTOR LOOP.
7. GENERAL CONTRACTOR SHALL VERIFY CONDUIT SIZES REQUIRED BY VEHICLE LOOP DETECTOR SUPPLIER.

COD LAYOUT NOTES:

1. ALL DIMENSIONS ARE TO BACK OF CURB UNLESS NOTED OTHERWISE ON PLAN.
2. FIELD VERIFY AND CONFIRM EXISTING CONDITIONS AND DIMENSIONS PRIOR TO COMMENCING CONSTRUCTION. NOTIFY MCDONALD'S PROJECT MANAGER OF ANY DISCREPANCIES PRIOR TO COMMENCING CONSTRUCTION.
3. SEE SHEET C2.1 FOR ALL SITE DIMENSIONS.
4. SEE SHEET C2.6 FOR STRIPING.

GRAPHIC SCALE
10 0 5 10 20

REV	DATE	DESCRIPTION	BY
2	4/28/16	PERMIT SET	JMR
1	4/07/16	INITIAL CITY REVIEW	JMR

PREPARED BY:
Bishop Engineering
"Planning Your Successful Development"
3501 104th Street
Des Moines, Iowa 50322-2025
Phone: 515-276-4092 Fax: 515-276-4017
Civil Engineering & Land Surveying Established 1959

PREPARED FOR:
McDonald's USA, LLC

© 2016 McDonald's USA, LLC
These drawings and specifications are the confidential and proprietary property of McDonald's USA, LLC and are to be used or reproduced without written authorization. The contract documents were prepared for use on this specific site in conjunction with its issue date and are intended for reference or example on other projects. Reproducing these drawings for reference or example on another project requires the services of properly licensed architects and engineers to modify the contract documents for reuse on another project. is not authorized.

DRAWN BY: JMR
STD DESIGN DATE: 4/28/16
REVISED BY: JEJ
DATE ISSUED: 4/28/16

TITLE: MADISON, WI
SITE PLAN
DESCRIPTION: COD LAYOUT PLAN
SITE ADDRESS: 2901 DRYDEN DR
SITE ID: 480101

SHEET NO. C2.2
BE# 120337

6/28/2016 1:39:51 PM M:\LAND PROJECTS 2012\120337 MADISON, WI - DRYDEN\DWG\C2 LAYOUT.DWG

NOTES:
-PIER DEPTHS REQUIRED ARE MINIMUMS. ALL PIERS TO EXTEND TO FROST DEPTH AS DETERMINED BY LOCAL JURISDICTION.
-TOP OF PIERS SHALL BE SLOPED SUCH THAT MOISTURE CANNOT ACCUMULATE.
-MINIMUM ALLOWABLE LATERAL SOIL BEARING PRESSURE 100 PSF/FT OF DEPTH (x2)
-ALL REINFORCING STEEL BY GENERAL CONTRACTOR

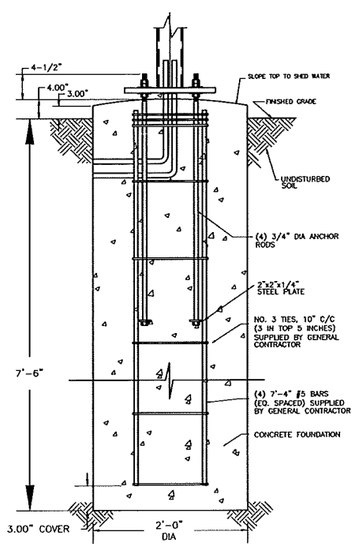

3 C2.3 FP43-OPO MENUBOARD FOUNDATION-90 MPH NTS

NOTES:
-TOP OF PIERS SHALL BE SLOPED SUCH THAT MOISTURE CANNOT ACCUMULATE.
-ANCHOR RODS, NUTS, AND WASHERS SHALL BE SHIPPED AS AN ASSEMBLY FROM THE SIGN/LIGHTING MANUFACTURER

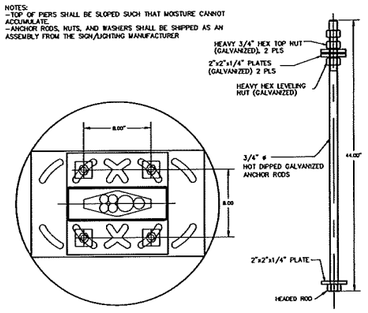

A ANCHOR BOLT PATTERN NTS

NOTES:
-TOP OF PIERS SHALL BE SLOPED SUCH THAT MOISTURE CANNOT ACCUMULATE.
-ANCHOR RODS, NUTS, AND WASHERS SHALL BE SHIPPED AS AN ASSEMBLY FROM THE SIGN/LIGHTING MANUFACTURER
-DO NOT CUT ANCHOR BOLTS AFTER INSTALLATION OF POLE

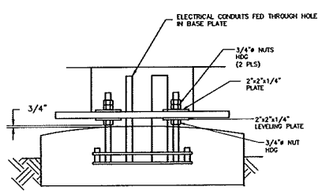

B CONNECTION DETAILS NTS

GENERAL NOTES

ACCUPLANT UPLOAD DATE: 11/2/2012

NOTES:
-DESIGN CODES
BC 2009
ASCE 7-05
ACI 318-08
AISC 13th EDITION
AWS D1.1
-WIND SPEED-100 MPH (MPH 3-SEC GUST)
-EXPOSURE C
-DESIGN LOADS DERIVED FROM THESE CODES AND FORCES (& if)
-AXIAL-2600 LBS
-SHEAR-2900 LBS
-OVERTURNING MOMENT-14,500 LB-FT
-USE CONCRETE WITH A 3000PSI MINIMUM COMPRESSIVE STRENGTH ($f'c$).
-PIER DEPTHS REQUIRED ARE MINIMUMS. ALL PIERS TO EXTEND TO FROST DEPTH AS DETERMINED BY LOCAL JURISDICTION.
-TOP OF PIERS SHALL BE SLOPED SUCH THAT MOISTURE CANNOT ACCUMULATE.
-ELECTRICAL CONTRACTOR TO PROVIDE INFORMATION ON CONDUIT AND ELECTRICAL REQUIREMENTS.
-MINIMUM ALLOWABLE LATERAL SOIL BEARING PRESSURE 100 PSF/FT OF DEPTH (x2)
-TOP 6" OF SOIL NEGLECTED IN EMBEDMENT DEPTH CALCULATIONS (EMBEDMENT DEPTHS SHOWN ARE FROM GRADE).
-PROVIDE A MINIMUM OF 3" CONCRETE COVER FOR ALL EMBEDDED STEEL.
-FOUNDATION IS DESIGNED FOR SINGLE OR DOUBLE POLE COLUMNS
-ALL REINFORCING STEEL BY GENERAL CONTRACTOR.

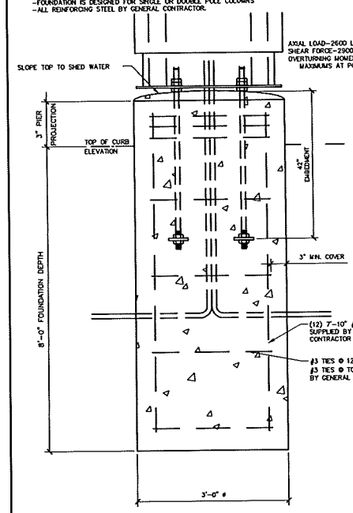

2 C2.3 ORDER HERE CANOPY 100 MPH NTS

NOTES:
-TOP OF PIERS SHALL BE SLOPED SUCH THAT MOISTURE CANNOT ACCUMULATE.
-USE F1554 GRADE 36 BOLTS MINIMUM
-USE HOT DIPPED GALVANIZED BOLTS
-ANCHOR BOLTS TO BE SET IN ACCORDANCE WITH AISC CODE OF STANDARD PRACTICE
-ANCHOR RODS, NUTS, AND WASHERS SHALL BE SHIPPED AS AN ASSEMBLY FROM THE SIGN/LIGHTING MANUFACTURER
-DO NOT CUT ANCHOR BOLTS AFTER INSTALLATION OF POLE

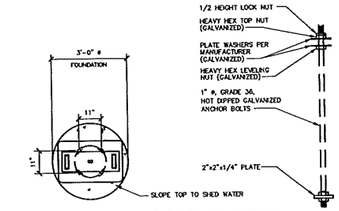

A ANCHOR BOLT PATTERN NTS

NOTES:
-TOP OF PIERS SHALL BE SLOPED SUCH THAT MOISTURE CANNOT ACCUMULATE.
-ANCHOR RODS, NUTS, AND WASHERS SHALL BE SHIPPED AS AN ASSEMBLY FROM THE SIGN/LIGHTING MANUFACTURER
-DO NOT CUT ANCHOR BOLTS AFTER INSTALLATION OF POLE

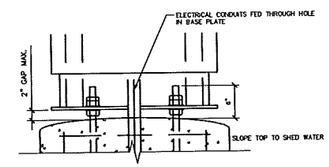

B CONNECTION DETAILS NTS

ACCUPLANT UPLOAD DATE: 11/2/2012

GENERAL NOTES

-THE FOLLOWING CODES WERE USED IN DESIGN:
-BC 2009
-ASCE 7-05
-ACI 318-08
-AISC 13th EDITION
-AWS D1.1
-WIND SPEED 100 MPH, 3 SEC GUST
-EXPOSURE C
-DESIGN LOADS DERIVED FROM THESE CODES AND FORCES
-AXIAL - 2600 LBS
-SHEAR - 2900 LBS
-MOMENT - 14,500 LB-FT

-ALL FOOTING EXCAVATIONS ARE TO BE CLEAR OF WATER AND FOREIGN MATTER BEFORE PLACING CONCRETE
-MINIMUM ALLOWABLE LATERAL SOIL BEARING PRESSURE OF 100PSF/FT (x2)
-SITE SOIL CONDITIONS TO BE CONFIRMED BY GEOTECHNICAL ENGINEER. IF ASSUMED SOIL CONDITIONS ARE NOT PRESENT, FOUNDATION SHALL BE DESIGNED BY A LICENSED STRUCTURAL ENGINEER TAKING INTO ACCOUNT ACTUAL SITE SOIL CONDITIONS.
-TOP 6" OF SOIL NEGLECTED IN EMBEDMENT DEPTH CALCULATIONS (EMBEDMENT DEPTHS SHOWN ARE FROM GRADE)

-ELECTRICAL CONTRACTOR TO PROVIDE INFORMATION ON CONDUIT AND ELECTRICAL REQUIREMENTS.

CONCRETE:

-ALL FOOTINGS SHALL BEAR ON FIRM UNDISTURBED RESIDUAL SOIL AND/OR ENGINEERED EARTH FILL COMPACTED TO 98% OF ITS MAXIMUM DRY DENSITY AS PER ASTM D 698-70 (STANDARD PROCTOR) UNLESS NOTED OTHERWISE.
-ALL PIERS TO EXTEND TO FROST DEPTH AS DETERMINED BY LOCAL JURISDICTION.
-TOP OF PIERS SHALL BE SLOPED SUCH THAT MOISTURE CANNOT ACCUMULATE.
-MINIMUM CONCRETE STRENGTH ($f'c$) SHOULD CONFORM WITH MCDONALDS CAST-IN-PLACE CONCRETE SPECIFICATIONS SECTION 2.13-A
-USE OF ADMIXTURES SHALL CONFORM TO MCDONALDS CAST-IN-PLACE CONCRETE SPECIFICATION SECTION 2.6
-AIR ENTRAINMENT SHALL CONFORM WITH MCDONALDS CAST-IN-PLACE CONCRETE SPECIFICATION SECTIONS 2.6-A & 2.13-A
-WATER CONTENT RATIO SHALL CONFORM TO MCDONALDS CAST-IN-PLACE CONCRETE SPECIFICATIONS SECTION 2.13-A
-FOUNDATION CONCRETE TO BE TESTED PER MCDONALDS CAST-IN-PLACE CONCRETE SPECIFICATIONS SECTION 3.14
-PROVIDE A MINIMUM 3" OF CONCRETE COVER OVER ALL EMBEDDED STEEL.
-REINFORCEMENT PLACEMENT SHALL CONFORM TO MCDONALDS CAST-IN-PLACE CONCRETE SPECIFICATIONS SECTIONS 3.2 & 3.5. PERFORMED BY GENERAL CONTRACTOR.
-ANCHOR BOLTS TO BE SET IN ACCORDANCE WITH AISC CODE OF STANDARD PRACTICE
-DO NOT PLACE POLES ON CONCRETE UNTIL CONCRETE HAS CURED PER MCDONALDS CAST-IN-PLACE CONCRETE SPECIFICATION, SECTION 3.11-E.

STEEL:

-STEEL PIPE SECTION: ASTM A53 OR A252 TYPE E GRADE B (F_y = 35ksi)
-HSS ROUND SECTION: ASTM A500 GRADE B (F_y = 42ksi)
-HSS SQUARE/RECTANGULAR SECTIONS: ASTM A500 GRADE B (F_y = 46ksi)
-CONNECTION BOLTS A325
-STEEL ANGLES, CHANNELS, STRUCTURAL SHAPES AND PLATES: ASTM A36
REINFORCEMENT: GRADE 60 - BY GENERAL CONTRACTOR
-NUTS A563DH OR A194-2H
-WASHERS A36
-USE HOT DIPPED GALVANIZED BOLTS AND FASTENERS
-ANCHOR RODS, NUTS, AND WASHERS SHALL BE SHIPPED AS AN ASSEMBLY FROM THE SIGN/LIGHTING MANUFACTURER
-NO FIELD HEATING TO BEND STEEL SHALL BE ALLOWED WITHOUT ENGINEER'S APPROVAL.
-DO NOT CUT ANCHOR BOLTS AFTER INSTALLATION OF POLE
-AFTER INSTALLATION, ALL EXPOSED STEEL SHALL BE PAINTED WITH AN ENAMEL PAINT TO INHIBIT CORROSION.
-ANY FIELD WELDING SHALL FIRST BE VERIFIED BY ENGINEER AND PERFORMED IN ACCORDANCE WITH AWS D1.1.

-REFER TO SIGN MANUFACTURER DRAWINGS AND INSTRUCTIONS FOR ADDITIONAL INFORMATION.
-CONTRACTOR (INSTALLER) IS RESPONSIBLE FOR THE MEANS AND METHODS OF CONSTRUCTION IN REGARDS TO JOBSITE SAFETY.
-FOUNDATIONS ARE DESIGNED FOR SINGLE OR DOUBLE POLE COLUMNS
-DETAILS AND STRUCTURAL MEMBERS NOT SHOWN DESIGNED BY OTHERS
-ANY MODIFICATIONS ARE TO BE VERIFIED BY AN ENGINEER

ACCUPLANT UPLOAD DATE: 11/2/2012

REV	DATE	DESCRIPTION	BY
2	6/28/16	PERMIT SET	JMR
1	6/9/16	INITIAL CITY REVIEW	JMR

PREPARED BY:
Bishop Engineering
"Planning Your Successful Development"
3501 104th Street
Des Moines, Iowa 50322-3925
Phone: (515)276-0467 Fax: (515)276-2017
Civil Engineering & Land Surveying Established 1959

PREPARED FOR:
McDonald's USA, LLC

©2016 McDonald's USA, LLC
These drawings and specifications are the confidential and proprietary property of McDonald's USA, LLC and shall not be copied or reproduced without written authorization. The drawings and specifications were prepared for use on this specific site, in conjunction with its issue date and are not suitable for use on a subsequent project at a later date or at other sites. Any re-use on a similar or another project requires the services of properly licensed architects and engineers. Reproduction of the contract documents for reuse on another project is not authorized.

DRAWN BY JMR
ED ISSUE DATE 6/28/16
REVIEWED BY JEJ
DATE ISSUED 6/28/16

TITLE: MADISON, WI
SITE PLAN
DESCRIPTION: DRIVE-THRU DETAILS
SITE ID 480101
SITE ADDRESS 2901 DRYDEN DR

SHEET NO. C2.3
BE # 120337

6/28/2016 1:38:52 PM M:\LAND PROJECTS 2012\120337 MADISON, WI - DRYDEN\DWG\C2 LAYOUT.DWG

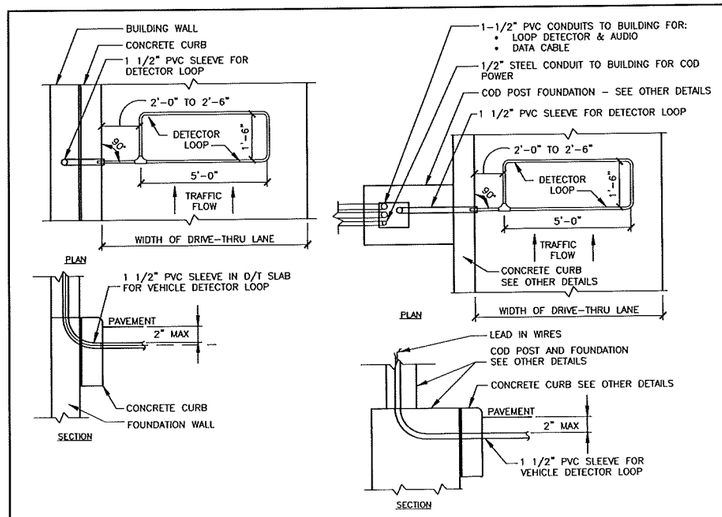

B – DT WINDOW DETECTOR LOOP

A – C.O.D. DETECTOR LOOP

NOTES

1. VERIFY CONDUIT SIZES AND LAYOUT WITH DETECTOR LOOP MANUFACTURER.
2. CENTER VEHICLE DETECTOR LOOP (ITEM # 217.11E1) IN DRIVE THRU LANE. INSTALL PER MFR. RECOMMENDATIONS.
3. SEE CIVIL FOR DIMENSIONS OF DRIVE-THRU LANE CONCRETE PAD FOR DETECTOR LOOP.
4. NO STEEL (REBAR OR ELECTRICAL WIRE) SHALL BE USED WITHIN 2' OF LOOP.
5. DETECTOR LOOP MANUFACTURERS:
   DETECTOR LOOPS MAY BE BY ONE OF THE FOLLOWINGS COMPANIES OR EQUAL.
   3M: 1-800-328-0033
   HME: 1-800-848-4468
6. DETECTOR LOOP MATERIAL:
   PVC TUBING 1/2" I.D. 100 PSI LOOP MADE FROM ONE LENGTH OF THIN FOURTEEN GAUGE STRANDED WIRE. LEAD-IN IS PRE-TWISTED AT FACTORY.
7. DETECTOR LOOP CONSTRUCTION:
   FORMED WITH ONE CONTINUOUS LENGTH OF PVC WITH NO SHARP CORNERS AS DETAILED. WIRE LOOPED, FORMED, & PIGTAILED AS DETAILED.

DETECTOR LOOP IN EXISTING PAVEMENT:
FOR ANY AND ALL DETECTOR LOOPS THAT WILL BE PLACED IN EXISTING PAVEMENT, CONTRACTOR SHALL SAWCUT & PLACE LOOP DETECTOR INTO EXISTING SLAB. UPON PLACEMENT OF LOOP DETECTOR, FILL SAWCUT WITH GRAY MASTIC JOINT SEALER.

1 / C2.4 DETECTOR LOOP DETAILS
NOT TO SCALE

PREPARED FOR:
McDonald's USA, LLC

© 2013 McDonald's USA, LLC
These drawings and specifications are the confidential and proprietary property of McDonald's USA, LLC and shall not be reused or reproduced without written authorization. The contract documents were prepared for use on this specific site in conjunction with its base date and are not suitable for use on a different site or in a different jurisdiction. Reuse of these drawings for reference or example on another project requires the services of properly licensed architect and engineer. Modification of the contract documents for reuse on another project is not authorized.

PREPARED BY:
Bishop Engineering
"Planning Your Successful Development"
3501 104th Street
Des Moines, Iowa 50322-2025
Phone: 515-276-4092 Fax: 515-276-2017
Civil Engineering & Land Surveying Established 1959

REV	DATE	DESCRIPTION	BY
2	4/28/16	PERMIT SET	JMR
1	4/07/16	INITIAL CITY REVIEW	JMR

DRAWN BY: JMR
SUPERVISOR DATE: 6/28/16
REVIEWED BY: JEJ
DATE REVISED: 6/28/16

TITLE: MADISON, WI
SITE PLAN
DESCRIPTION: DRIVE-THRU DETAILS

SITE ID: 480101
SITE ADDRESS: 2901 DRYDEN DR.

SHEET NO. C2.4
BE # 120337

6/28/2016 1:39:53 PM MILAND PROJECTS 2012\120337 MADISON, WI - DRYDEN\DWG\C2 LAYOUT.DWG

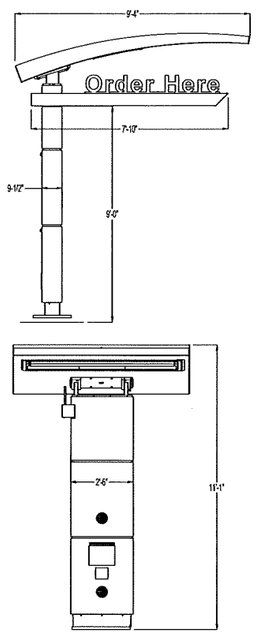

1 C2.5 COD SCHEMATIC DETAIL
NOT TO SCALE

NOTE: THIS DRAWING IS SHOWN FOR SCHEMATIC PURPOSES ONLY. SEE MANUFACTURER FOR INSTALLATION INSTRUCTIONS

CONTRACTOR SHALL INSTALL ADDITIONAL ADA SIGNAGE (SUCH AS FINE AMOUNT) AS REQUIRED PER LOCAL ORDINANCE

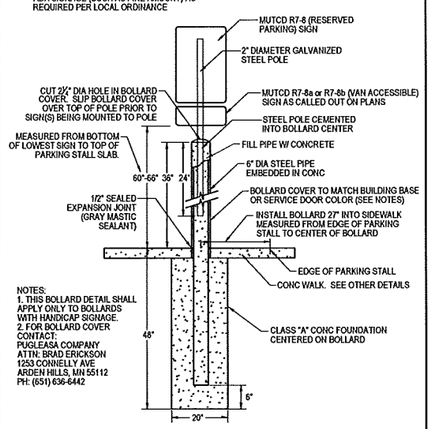

NOTES:
1. THIS BOLLARD DETAIL SHALL APPLY ONLY TO BOLLARDS WITH HANDICAP SIGNAGE.
2. FOR BOLLARD COVER CONTACT:
PUGLEASA COMPANY
ATTN: BRAD ERICKSON
1253 CONNELLY AVE
ARDEN HILLS, MN 55112
PH: (651) 636-6442

2 C2.5 HANDICAP PARKING SIGN & BOLLARD DETAIL
NOT TO SCALE

NOTES:
1. THIS BOLLARD DETAIL SHALL APPLY ONLY TO BOLLARDS WITH PULL FORWARD SIGNAGE.
2. FOR BOLLARD COVER CONTACT:
PUGLEASA COMPANY
ATTN: BRAD ERICKSON
1253 CONNELLY AVE
ARDEN HILLS, MN 55112
PH: (651) 636-6442

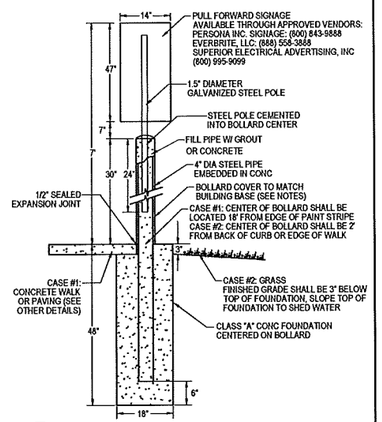

3 C2.5 PULL FORWARD SIGN & BOLLARD DETAIL
NOT TO SCALE

NOTES:
1. THIS BOLLARD DETAIL SHALL APPLY TO BOLLARD AT REAR CORNER OF BUILDING ADJACENT TO DRIVE-THRU AND EXTERIOR TRASH ENCLOSURE BOLLARDS.
2. FOR BOLLARD COVER CONTACT:
PUGLEASA COMPANY
ATTN: BRAD ERICKSON
1253 CONNELLY AVE
ARDEN HILLS, MN 55112
PH: (651) 636-6442

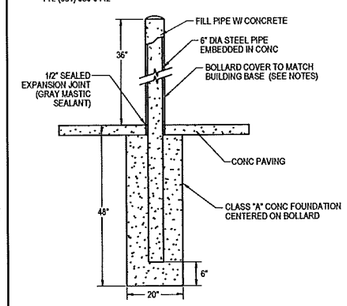

4 C2.5 BOLLARD DETAIL
NOT TO SCALE

KEY NOTES:

(A) 2#12 & 1#12 GND., 3/4" CONDUIT TO LP-1 FOR COD CANOPY LIGHTING

(B) 4#12 & 1#12 GND., 3/4" CONDUIT TO LP-1 FOR PRIMARY OPO MENUBOARD LIGHTING AND PLC.

(C) 2#12 & 1#12 GND & 1#12 ISOLATED GND., 3/4" CONDUIT TO CP FOR ISOLATED GROUND POWER TO COD'S. EACH COD SHALL BE ON ITS OWN DEDICATED CIRCUIT.

(D) 2#12 & 1#12 GND, 3/4" CONDUIT TO LP-1 FOR SECONDARY OPO MENUBOARD AND PRESELL BOARD LIGHTING.

(E) (2) 1-1/2" CONDUIT
ONE FOR COD CABLING
ONE FOR LOOP DETECTOR

(F) 1" CONDUIT - FOR LOW VOLTAGE/ OPO CONTROLLER

(G) 1-1/2" CONDUIT - FOR LOW VOLTAGE/ OPO CONTROLLER

GENERAL NOTES:
1. VERIFY EXACT CIRCUITS AND QUANTITIES OF CIRCUITS WITH PANEL SCHEDULES ON DRAWING E4.2 AND MANUFACTURER'S INSTALLATION INSTRUCTIONS
2. PER MANUFACTURER'S INSTALLATION INSTRUCTIONS SEPERATE DEDICATED NEUTRALS ARE REQUIRED TO MENUBOARD AND PRESELL BOARD FOR EACH CIRCUIT (PLC AND LIGHTING)
3. IF ANY BENDS ARE REQUIRED, SWEEPS MUST BE PROVIDED IN CONDUITS.

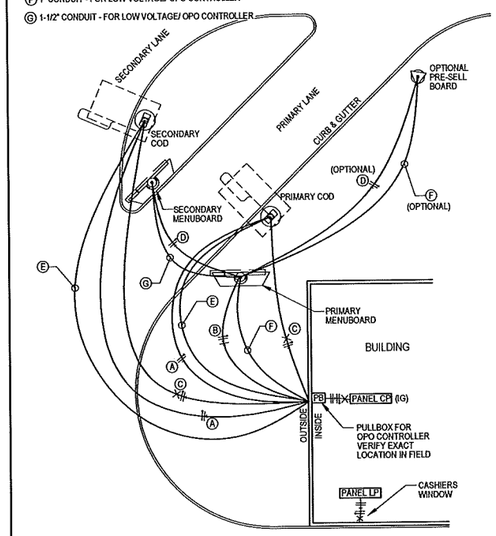

5 C2.5 DRIVE-THRU WIRING DETAIL
NOT TO SCALE

SKETCH CREATED FROM ELECTRICAL OPO UPDATE (E-OPO) DATED SEPT. 2012
-MODIFIED PER REGIONAL INPUT AUG. 2014.

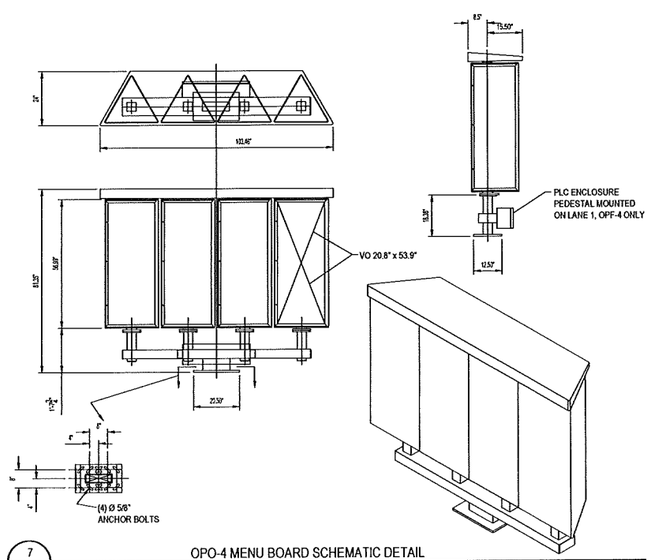

7 C2.5 OPO-4 MENU BOARD SCHEMATIC DETAIL
NOT TO SCALE

NOTE: THIS DRAWING IS SHOWN FOR SCHEMATIC PURPOSES ONLY. SEE MANUFACTURER FOR INSTALLATION INSTRUCTIONS

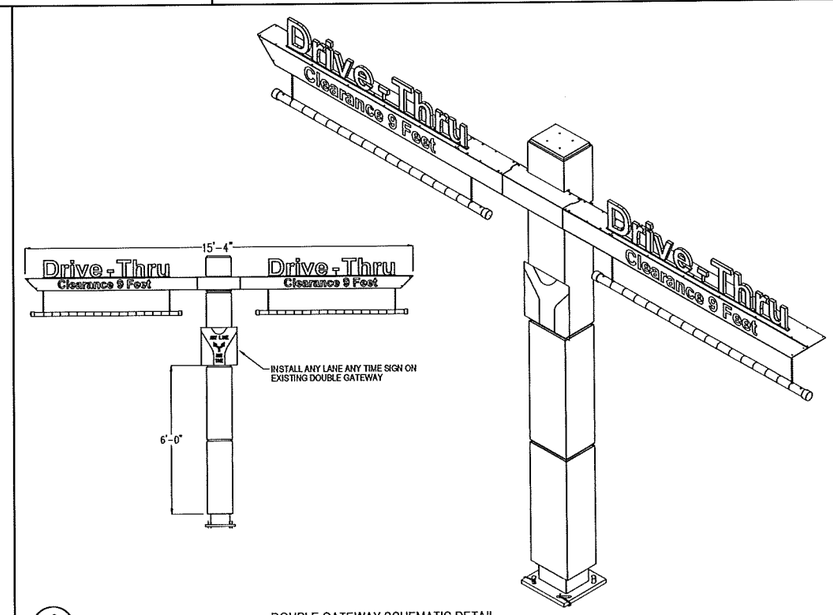

8 C2.5 DOUBLE GATEWAY SCHEMATIC DETAIL
NOT TO SCALE

NOTE: THIS DRAWING IS SHOWN FOR SCHEMATIC PURPOSES ONLY. SEE MANUFACTURER FOR INSTALLATION INSTRUCTIONS

REV	DATE	DESCRIPTION	BY
2	6/28/16	PERMIT SET	JMR
1	4/07/16	INITIAL CITY REVIEW	JMR

PREPARED BY:
Bishop Engineering
"Planning Your Successful Development"
3501 104th Street
Des Moines, IA 50322-3025
Phone: 515/276-4467 Fax: 515/276-2017
Civil Engineering & Land Surveying · Established 1959

PREPARED FOR:
McDonald's USA, LLC

©2016 McDonald's USA, LLC

These drawings and specifications are the confidential and proprietary property of McDonald's USA, LLC and are not to be reproduced, published or used in any way without written authorization. The contract documents were prepared for use on this specific site. Any other use or reuse of these drawings for reference or example on another project requires the express written consent of McDonald's USA, LLC and the architect of record. Use of the contract documents for reuse on another project is not authorized.

DRAWN BY: JMR
STD. BASE DATE: 6/28/16
REVIEWED BY: JEJ
DATE ISSUED: 6/28/16

TITLE: MADISON, WI
SITE PLAN
DESCRIPTION: DRIVE-THRU DETAILS
SITE ID: 480101
SITE ADDRESS: 2901 DRYDEN DR

SHEET NO. C2.5
BE # 120337

6/28/2016 1:39:56 PM M:\LAND PROJECTS 2012\120337 MADISON, WI - DRYDEN\DWG\C2 LAYOUT.DWG

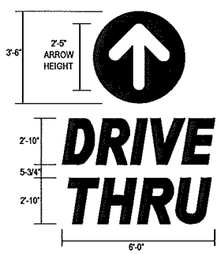

CIRCLE IS POSITIONED HORIZONTALLY, CENTERED ABOVE TYPE

ARROW IS POSITIONED VERTICALLY AND HORIZONTALLY INSIDE OF CIRCLE

ARROW ART KNOCKS OUT SO THAT ARROW IS THE COLOR OF THE PAVEMENT

LETTERS AND CIRCLE PAINT TO MATCH PANTONE PMS 123 YELLOW TYPES ALIGNS CENTERED

1 / C2.6 PAINTED 'DRIVE THRU' WITH ARROW
NOT TO SCALE

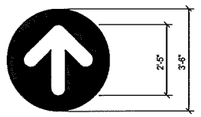

NOTE: ARROW SHALL BE PAINTED YELLOW (PMS 123)

2 / C2.6 PAINTED ARROW
NOT TO SCALE

NOTES:
1. ALL TEXT SHALL BE PAINTED YELLOW (PMS 123)
2. "THANK YOU" SHALL BE LOCATED 8" FROM THE EDGE OF THE PULL FORWARD STRIPE TO THE BOTTOM OF THE WORD 'YOU' OR AS DIMENSIONED ON PLAN.

3 / C2.6 PAINTED 'THANK YOU'
NOT TO SCALE

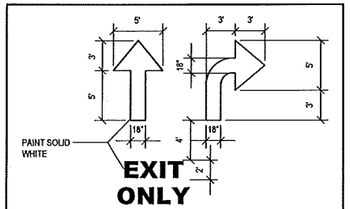

NOTE : ARROWS AND WORDS CAN BE ARRANGED IN OTHER COMBINATIONS THAN THOSE ILLUSTRATED HERE TO ACHIEVE DESIRED RESULT.

4 / C2.6 TYPICAL PAVEMENT MARKING
NOT TO SCALE

STRIPING NOTES:

- (A) 6" WIDE PAINTED STRIPE. PMS 123, YELLOW.
- (B) 1'-0" WIDE PAINTED DIRECTIONAL ARROW. PMS 123 YELLOW. SEE GENERAL NOTE 4.
- (C) 6" WIDE PAINTED MERGE POINT. PMS 123 YELLOW. SEE GENERAL NOTE 4.
- (D) PAINTED DRIVE THRU GRAPHIC. SEE DETAIL 1. SEE GENERAL NOTE 4.
- (E) PAINTED DRIVE THRU GRAPHIC. SEE DETAIL 2. SEE GENERAL NOTE 4.
- (F) PAINTED DRIVE THRU GRAPHIC. SEE DETAIL 3. SEE GENERAL NOTE 4.
- (G) 8" WIDE, 10' LONG PAINTED PULL FORWARD STRIPE. PMS 123 YELLOW.
- (H) PAINTED SITE CIRCULATION ARROW. SEE DETAIL 4. SEE GENERAL NOTE 4.
- (I) 4" WIDE CUSTOMER PARKING STRIPING. WHITE.
- (J) PAINTED ISLAND, TYP. WHITE.
- (K) PAINTED HANDICAP SYMBOL, TYP. WHITE.
- (L) 6" WIDE PAINTED CROSSWALK STRIPING. WHITE
- (M) 4" WIDE PULL FORWARD STRIPING. PMS 123 YELLOW.

GENERAL NOTES:

1. FIELD VERIFY AND CONFIRM EXISTING CONDITIONS AND DIMENSIONS PRIOR TO COMMENCING CONSTRUCTION. NOTIFY MCDONALD'S PROJECT MANAGER OF ANY DISCREPANCIES PRIOR TO COMMENCING CONSTRUCTION.
2. SEE SHEET C2.1 FOR ALL RADIUS DIMENSIONS.
3. SEE SHEET C2.2 FOR COD CONSTRUCTION.
4. ALL PAVEMENT STENCILS MUST BE PURCHASED FROM THE FOLLOWING AUTHORIZED PROVIDER.
   PAVEMENT STENCIL COMPANY
   P.O. BOX 18034
   ROANOKE, VA. 24014
   PH 800-250-5547 FAX 540-427-1326
   PAVEMENTSTENCIL.NET

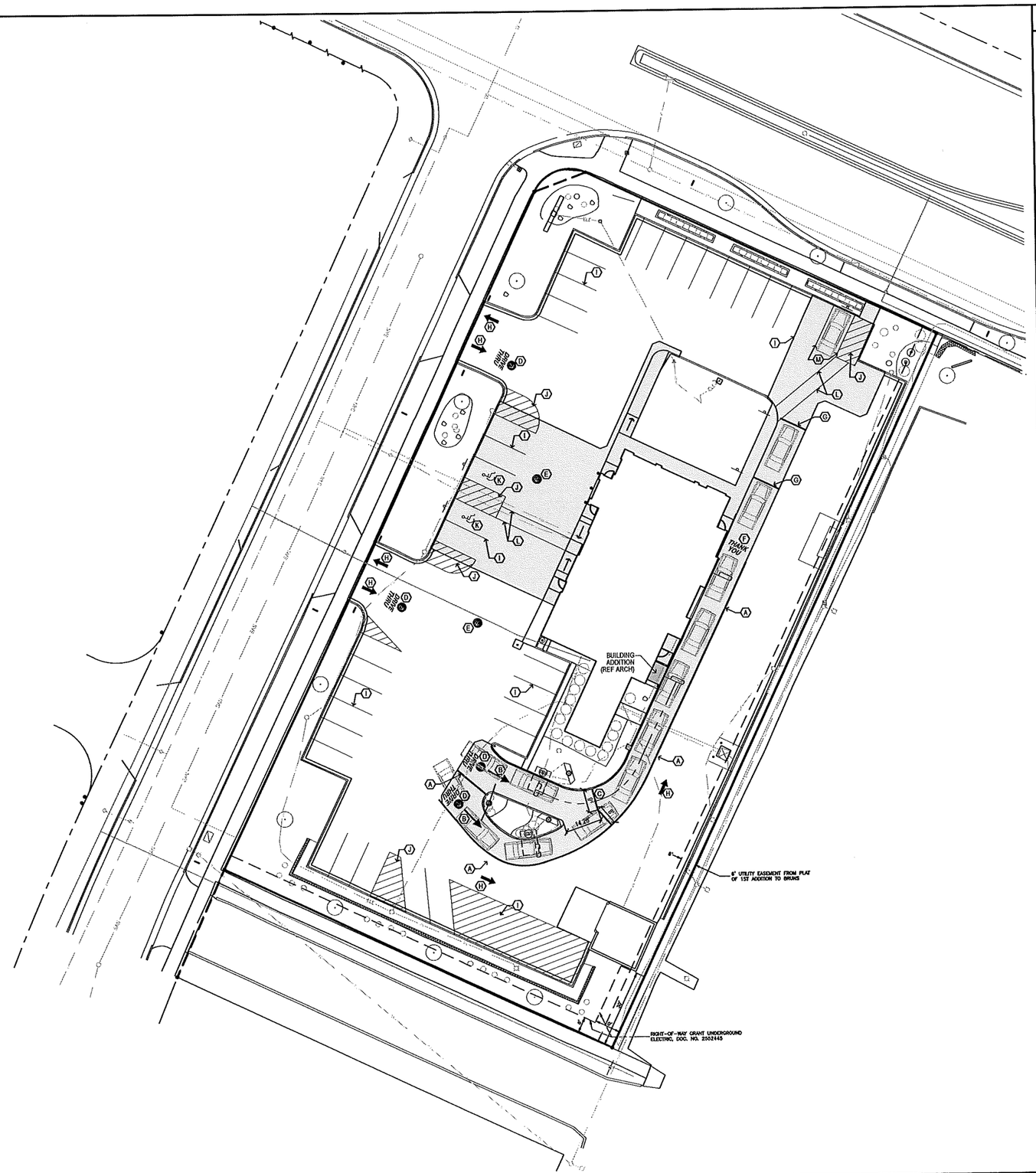

GRAPHIC SCALE
20 0 10 20 40

REV	DATE	DESCRIPTION	
2	6/28/16	PERMIT SET	JMR
1	6/9/16	INITIAL CITY REVIEW	JMR

PREPARED BY:
Bishop Engineering
"Planning Your Successful Development"
3501 104th Street
Des Moines, Iowa 50322-3925
Phone: (515)276-4467 Fax: (515)276-5317
Civil Engineering & Land Surveying — Established 1959

PREPARED FOR:
McDonald's USA, LLC

© 2013 McDonald's USA, LLC
These drawings and specifications are the confidential and proprietary property of McDonald's USA, LLC, and shall not be copied or reproduced without written authorization. The contract documents were prepared for use on the specific site and project for which they were prepared. Use of these drawings for reference or example on another project requires the express written consent of McDonald's USA, LLC. Use of the contract documents for reuse on another project is not authorized.

DRAWN BY	REVIEWED BY	
JMR	JEJ	
STD ISSUE DATE 6/28/16	DATE ISSUED 6/28/16	

TITLE: MADISON, WI SITE PLAN
DESCRIPTION: STRIPING PLAN
SITE ADDRESS: 2901 DRYDEN DR.
SITE ID: 460101
SHEET NO. C2.6
BE # 120337

6/28/2016 1:39:57 PM MILAND PROJECTS 2012\120337 MADISON, WI - DRYDEN\DWGS\C2 LAYOUT.DWG

TOPSOIL NOTES:

1. STRIP AND STOCKPILE THE TOP 6" OF SOIL ON ALL DISTURBED AREAS.
2. RESPREAD TOPSOIL TO A MINIMUM DEPTH OF 6" ON ALL GREEN (NON PAVED) AREAS. IMPORT TOPSOIL AS NECESSARY TO ACHIEVE A MINIMUM DEPTH OF 6".
3. TOPSOIL SHALL BE FREE OF ALL ROCK AND DEBRIS LARGER THAN 3/4" IN SIZE.
4. TOPSOIL IS DEFINED AS: FERTILE, FRIABLE LOAM, CAPABLE OF SUSTAINING VIGOROUS PLANT GROWTH, FROM WELL DRAINED SITE FREE FROM FLOODING, NOT IN FROZEN OR MUDDY CONDITIONS; REASONABLE FREE FROM SUBSOIL, CLAY LUMPS, ROOTS, GRASS, WEEDS, STONES LARGER THAN 3/4 INCH IN DIAMETER, AND FOREIGN MATTER; ACIDITY RANGE (PH) OF 5.5 TO 7.5; CONTAINING MINIMUM 4 PERCENT AND MAXIMUM 20 PERCENT ORGANIC MATTER.
5. CONTRACTOR SHALL BE RESPONSIBLE FOR ENSURING ALL TOPSOIL REQUIREMENTS OF NPDES GENERAL PERMIT NO. 2 ARE MET.

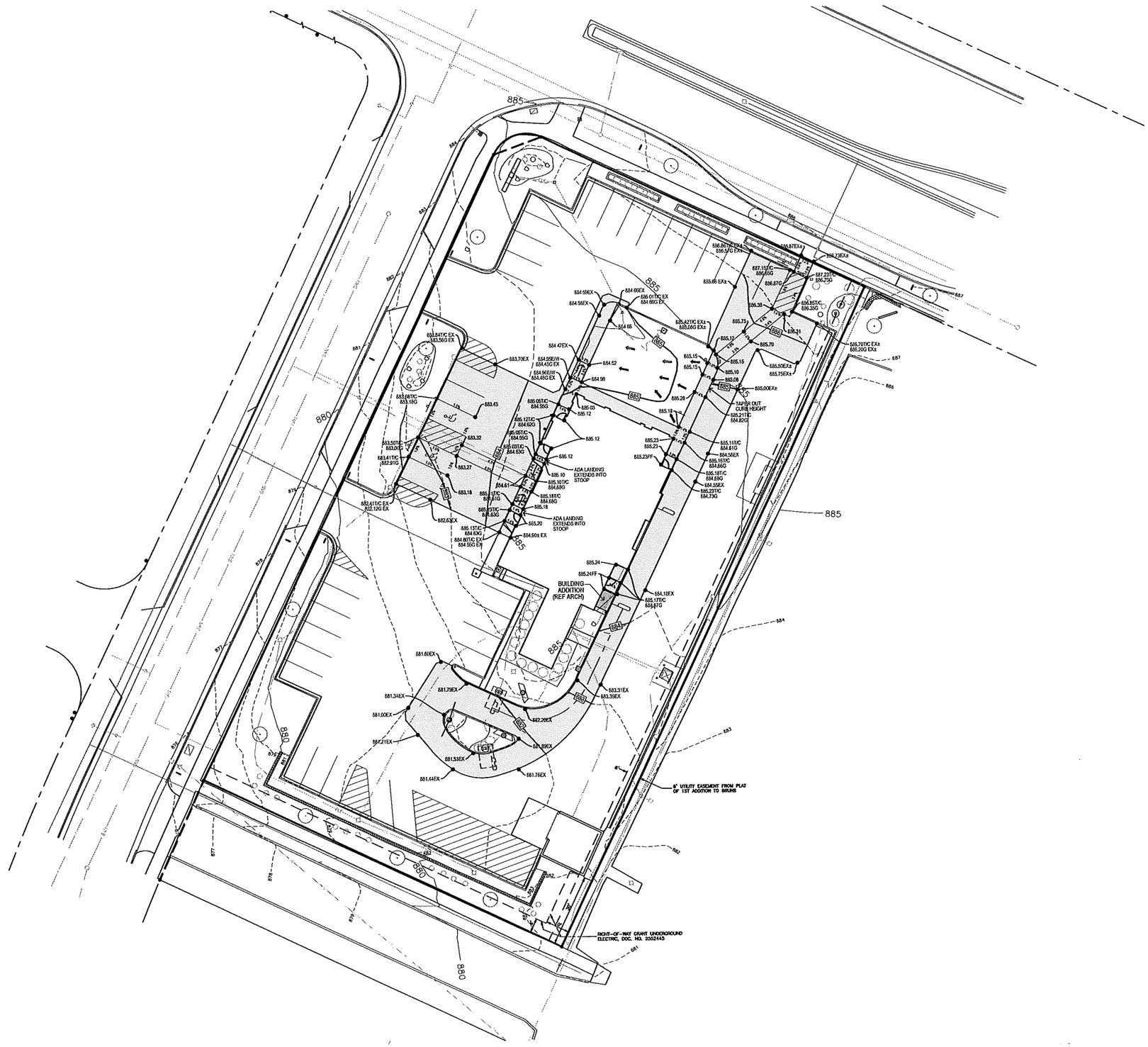

GRADING LEGEND:

EXISTING CONTOUR	150
PROPOSED CONTOUR	150
FINISHED GROUND ELEVATION	150.50
TOP OF CURB ELEVATION	150.50T/C
GUTTER ELEVATION	150.50G
TOP OF WALL ELEVATION	150.50T/W
BOTTOM OF WALL ELEVATION	150.50B/W
EDGE OF WALK ELEVATION	150.50E/W
TOP OF STAIR ELEVATION	150.50T/S
BOTTOM OF STAIR ELEVATION	150.50B/S

NOTE: WALL ELEVATIONS SHOWN ON PLAN ARE FINISHED GROUND GRADES AT THE TOP AND BOTTOM OF THE WALL.

GRAPHIC SCALE

20 0 10 20 40

REV	DATE	DESCRIPTION	BY
2	6/28/16	PERMIT SET	JMR
1	4/9/16	INITIAL CITY REVIEW	JMR

PREPARED BY:

Bishop Engineering
"Planning Your Successful Development"
3501 104th Street
Des Moines, Iowa 50322-1825
Phone: (515)276-0467 Fax: (515)276-2037
Civil Engineering & Land Surveying Established 1959

PREPARED FOR:

McDonald's USA, LLC

©2016 McDonald's USA, LLC

These drawings and specifications are the confidential and proprietary property of McDonald's USA, LLC and shall not be copied or reproduced without written authorization. The contract documents were prepared for use on this specific project with the intent that they be used for a period of one year. Use of these drawings for reference or example on another project requires the express written consent of McDonald's USA, LLC. Reproduction of the contract documents for reuse on another project is not authorized.

DRAWN BY: JMR
REVISION DATE: 6/28/16
REVIEWED BY: JEJ
DATE ISSUED: 6/28/16

TITLE: MADISON, WI SITE PLAN
DESCRIPTION: GRADING PLAN
SITE ID: 460101
SITE ADDRESS: 2901 DRYDEN DR

SHEET NO. C3.1
BE# 120337

6/28/2016 1:46:13 PM MILAND PROJECTS 2012\120337 MADISON, WI - DRYDEN\DWGS\C3 GRADING.DWG

LANDSCAPE NOTES:

1. ALL SODDING & LANDSCAPE PLANTINGS SHALL BE INSTALLED IN ACCORDANCE WITH THE URBAN STANDARD SPECIFICATIONS, UNLESS SPECIFIED OTHERWISE.
2. SOD ALL DISTURBED AREAS WITHIN THE CONTRACT LIMITS, UNLESS NOTED OTHERWISE.
3. PLANT QUANTITIES ARE FOR CONTRACTORS CONVENIENCE, THE DRAWING SHALL PREVAIL IF A CONFLICT OCCURS.
4. ALL PLANT MATERIAL SHALL CONFORM TO THE LATEST EDITION OF AMERICAN STANDARD FOR NURSERY STOCK (ANSI Z60.1).
5. CONTRACTOR SHALL GUARANTEE ALL PLANT MATERIAL FOR A PERIOD OF ONE YEAR FROM THE DATE OF ACCEPTANCE.
6. IT IS THE CONTRACTORS RESPONSIBILITY TO REMOVE IDENTIFICATION TAGS AND CORDS ON ALL PLANT MATERIAL PRIOR TO THE COMPLETION OF THE CONTRACT.
7. CONTRACTOR SHALL PLACE SHREDDED HARDWOOD MULCH AROUND ALL TREES AND SHRUB BEDS TO A DEPTH OF 4 INCHES, UNLESS NOTED.
8. STAKE AND WRAP ALL DECIDUOUS TREES IMMEDIATELY AFTER PLANTING. STAKE ALL TREES ACCORDING TO THE STAKING DETAILS. CONTRACTOR SHALL ADJUST AND MAINTAIN GUYING TENSION THROUGHOUT THE PLANT ESTABLISHMENT PERIOD.
9. THE LANDSCAPING CONTRACTOR SHALL HAVE ALL UTILITIES LOCATED BEFORE STARTING ANY SITE WORK OR PLANTING. THE CONTRACTOR SHALL BE RESPONSIBLE FOR THE PROTECTION OF ALL EXISTING UTILITIES.
10. NO LANDSCAPE MATERIAL SHALL BE SUBSTITUTED WITHOUT THE AUTHORIZATION OF THE LANDSCAPE ARCHITECT.
11. ALL EDGING SHALL BE DURAEDGE 1/8" STEEL EDGING - COLOR GREEN, OR APPROVED EQUAL..
12. CONTRACTOR SHALL BE RESPONSIBLE MAINTAINING APPROPRIATE LEVEL OF WATERING FOR ALL NEW PLANTS FOR A PERIOD OF 30 DAYS.
13. ALL SHRUB AND PERENNIAL PLANTING BEDS SHALL BE MULCHED WITH 4 INCH THICK SHREDDED HARDWOOD MULCH.
14. ALL BEDS TO RECEIVE PRE-EMERGENT WEED CONTROL BEFORE AND AFTER MULCH IS INSTALLED.

5 / XX — DENOTES EXISTING PLANT MATERIAL

11 / XX — DENOTES PROPOSED PLANT MATERIAL

PLANTING SCHEDULE

CODE	QUAN	COMMON NAME	LATIN NAME	SIZE	ROOT	NOTES	POINTS EACH	TOTAL POINTS
			PROPOSED LANDSCAPE PLANTINGS					
LC	2	LANCELOT CRABAPPLE	MALUS X'LANCELOT'	1.5" CAL	B&B	MATCHED SPECIMENS	15	30
GF	11	GOLD FLAME SPIREA	ROSA X'RAD RAZZ'	#5	CONT	FULL FORM - MATCHED	3	33
			EXISTING LANDSCAPE PLANTINGS					
MP	18	MUGO PINE	PINUS MUGO	36"+			4	72
UA	28	UPRIGHT ARBORVITAE	THUJA SP.	6'+			10	280
PH	75	PRIVET HEDGE	LIGUSTRUM SP.	48"+			3	225
3"M	5	MAPLE TREE	ACER SP.	3" CAL			35	175
6"M	2	MAPLE TREE	ACER SP.	6" CAL			84	168
						TOTAL NUMBER OF POINTS		983

LANDSCAPE REQUIREMENTS:

TOTAL SQUARE FOOTAGE OF DEVELOPMENT	37,762 SF
TOTAL LANDSCAPE POINTS REQUIRED (5 / 300 SF)	630
TOTAL LANDSCAPE POINTS PROVIDED	983

NOTE: IN ADDITION TO PLANT QUANTITIES SHOWN ABOVE, EXISTING PERENNIALS HAVE NOT BEEN QUANTIFIED, BUT WOULD COUNT TOWARDS ADDITIONAL LANDSCAPE POINTS.

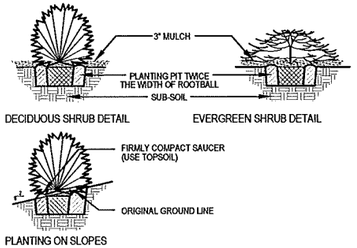

SHRUB PLANTING (TYP)
SCALE: NOT TO SCALE

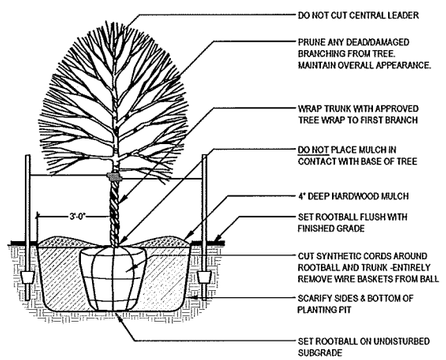

DECIDUOUS TREE PLANTING (TYP.)
SCALE: NOT TO SCALE

STAKING ORIENTATION

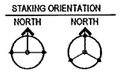

2 STAKES - 3" CAL. & LESS
3 STAKES - GREATER THAN 3" CAL.

USE HOSE GUARDS AROUND TRUNK ON STAKING WIRE. TIE WIRE TO STEEL POSTS PLACED OUTSIDE PLANT PIT..

LEAVE STAKES IN PLACE NO MORE THAN 1 YEAR FROM INSTALLATION. CONTRACTOR RESPONSIBLE FOR REMOVAL.

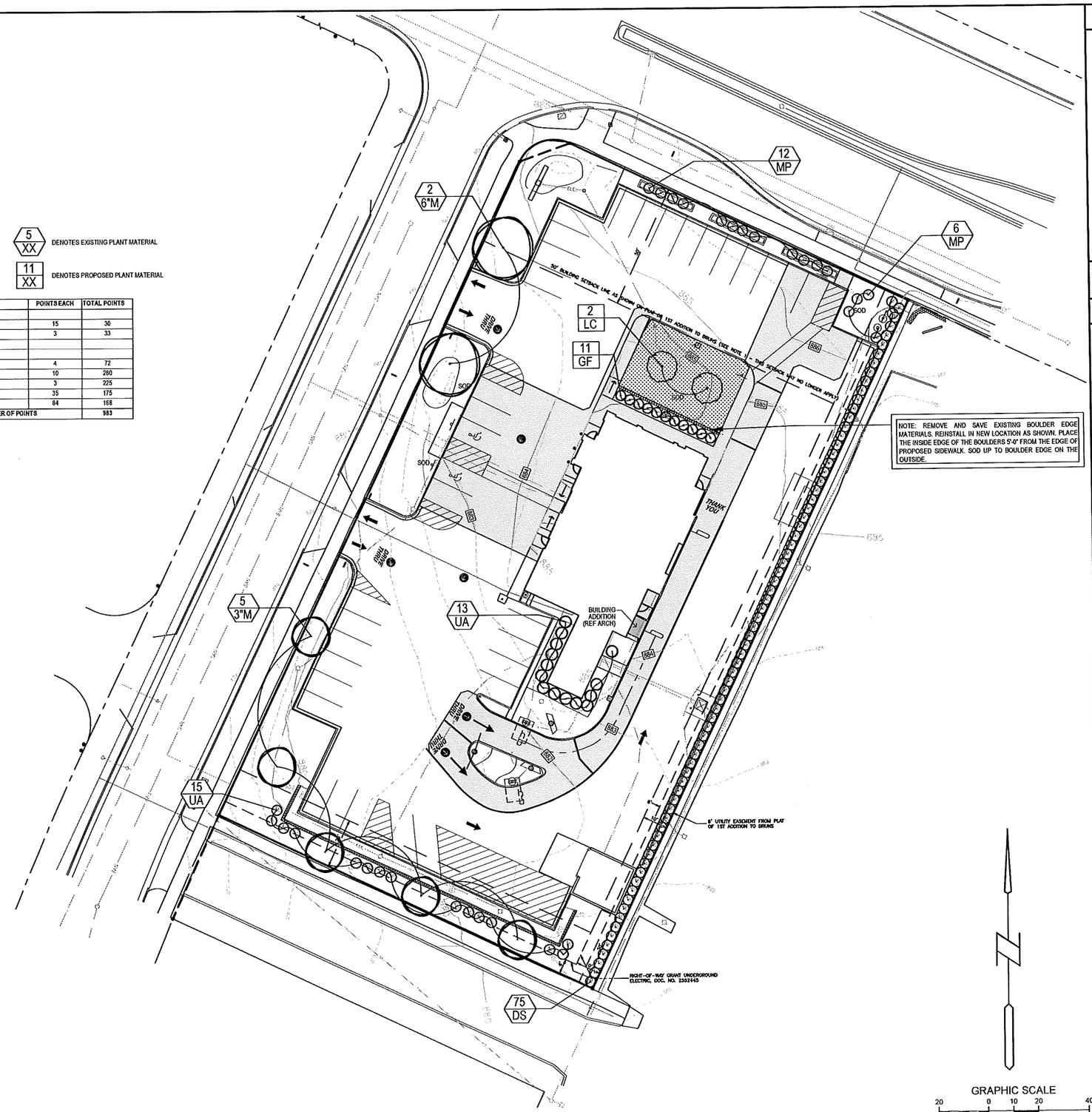

GRAPHIC SCALE
20 0 10 20 40

REV	DATE	DESCRIPTION	BY
2	4/28/16	PERMIT SET	JMR
1	4/9/15	INITIAL CITY REVIEW	JMR

PREPARED BY:
Bishop Engineering
"Planning Your Successful Development"
3501 104th Street
Des Moines, Iowa 50322-3625
Phone: (515) 276-4092 Fax: (515) 276-4037
Civil Engineering & Land Surveying Established 1959

PREPARED FOR:
McDonald's USA, LLC

©2016 McDonald's USA, LLC
These drawings and specifications are the confidential and proprietary property of McDonald's USA, LLC and shall not be used or reproduced without prior written authorization. The contract documents were prepared for use on this specific site in conjunction with its issue date and are not to be used for any other purpose or at any other location. Use of these drawings for reference or example on another project requires the services of properly licensed architects and/or engineers. Reproduction of the contract documents for reuse on another project is not authorized.

DRAWN BY: JMR
STD ISSUE DATE: 4/28/16
REVIEWED BY:
DATE ISSUED: 4/28/16

TITLE: MADISON, WI
SITE PLAN
DESCRIPTION: LANDSCAPE PLAN
SITE ID: 480101
SITE ADDRESS: 2701 DRYDEN DR
SHEET NO: C5.1
BE# 120337

4/28/2016 1:42:35 PM M:\LAND PROJECTS 2012\120237 MADISON, WI - DRYDEN\DWG\C5 LANDSCAPE.DWG

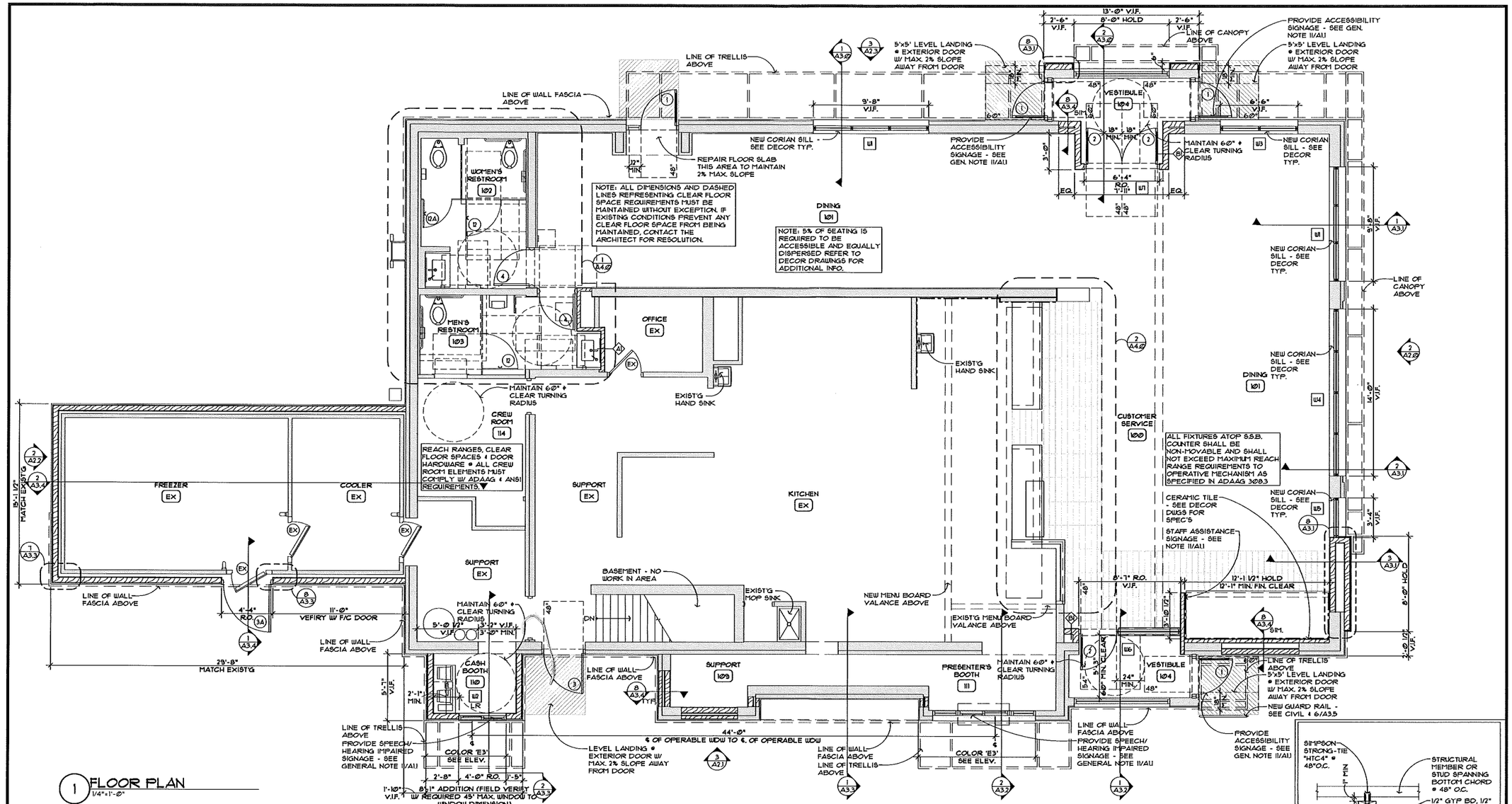

1 FLOOR PLAN
1/4"=1'-0"

GENERAL NOTES:

1. FIELD VERIFY ALL DIMENSIONS W/ EXISTING BUILDING CONDITIONS.
2. DRIVE-THRU WINDOW SUPPLIER: READY ACCESS: SERIES 600 - 47 1/2" x 43 1/2" TELEPHONE 1800-671-5045.
3. PATCH ALL DISTURBED SURFACES TO MATCH EXISTING.
4. ASSUMED EXISTING EXTERIOR WALL CONSTRUCTION IS BLOCK W/BRICK AND VINYL SIDING AT MAIN BUILDING. 6" METAL STUD WALL W/ VINYL SIDING AT PLAYPLACE AND FREEZER/COOLER. CONTRACTOR TO FIELD VERIFY AND NOTIFY ARCHITECT IF DIFFERENT.
5. INTERIOR FINISHES IN NEW CONSTRUCTION AREA'S TO MATCH EXIST'G OR ACM APPROVED ALTERNATE - SEE SHEET A4.1 FOR DOOR AND WINDOW FINISHES.
6. SEE EXTERIOR ELEVATIONS FOR WINDOW TYPES.
7. NEW SLAB @ TRENCH CUT. DOWEL NEW SLAB INTO EXIST'G W/ #4 BARS SPACED @ 24" O.C. - EA. SIDE TO OVERLAP @ MECH. TRENCH. CENTER DOWEL IN SLAB & EMBED 4" (MIN.) W/ EPOXY ADHESIVE. NEW SLAB TO MATCH OR EXCEED EXIST'G SLAB THICKNESS. SHOULD SLAB BE STRUCTURAL (THICKNESS EXCEEDS 4" & CONTAINS REINFORCING BARS) CONTACT ARCHITECT FOR RESOLUTION. AT MECH. TRENCH, RECOMPACT FILL W/ MECH. COMPACTOR IN 6" MAX. LIFTS.
8. MAXIMUM OCCUPANCY SIGN TO BE POSTED PER LOCAL CODE. SIGN FURNISHED AND INSTALLED BY GC.
9. ALL NEW HAND SINK LOCATIONS SHALL HAVE CEMENT BOARD BACKING 48" IN HEIGHT AFF.
10. GC TO COORDINATE ALL REQUIRED BLOCKING FOR WALL HUNG EQUIPMENT, SHELVES, ETC. FOR PROPER INSTALLATION HEIGHTS.
11. GC TO PROVIDE ADA SIGNAGE PACKAGE AND INSTALL SIGNS AT LOCATIONS AND POSITIONS INDICATED IN PACKAGE OR AS REQUIRED BY LOCAL CODES. SIGNAGE PACKAGE SUPPLIED BY:
FORREST PERMA-SIGN
1-800-214-8165
9292 1ST ST., BOX 588
NEW ROCHELLE, NY 10802

WALL LEGEND:

- EXISTING TO REMAIN
- NEW WOOD STUD WALL
- CERAMIC TILE

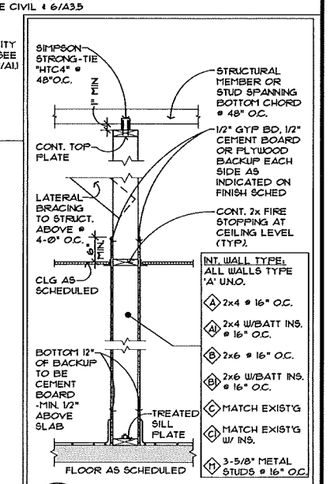

2 WALL TYPE DETAIL
3/4" = 1'-0"

reprise DESIGN
Architecture, Inc.
1449 Pertland Avenue South
Suite 100, Portland Business Center
Stillwater, MN 55082
Office: (651) 275-0142
Fax: (651) 275-0342

I hereby certify that this plan, specification or report was prepared by me or under my direct supervision and that I am a duly registered ARCHITECT under the laws of the State of WISCONSIN

Signature BRIAN R. JOHNSON
Registration Number 9143-005
Date 06/08/2016

McDONALD'S RESTAURANT

2016 MAJOR REMODEL PROGRAM

State Site Code: 048-0101 Nat'l Number: 4067

2901 DRYDEN DR. MADISON, WISCONSIN

FLOOR PLAN

© 2016 McDonald's USA, LLC

PREPARED FOR: McDonald's USA, LLC

These drawings and specifications are the confidential and proprietary property of McDonald's USA, LLC and may not be copied or reproduced without written authorization. The drawings and specifications are intended only for use on the site in conjunction with a lease date and are not suitable for use on a different site or at a later time. Use of these drawings and specifications for other McDonald's USA, LLC project requires the services of properly licensed architects and engineers familiar with the site-specific requirements for reuse on another project is not authorized.

DATE ISSUED	06/08/2016
DRAWN BY	AL
CHECKED BY	KD
JOB NO.	16068

A1.1

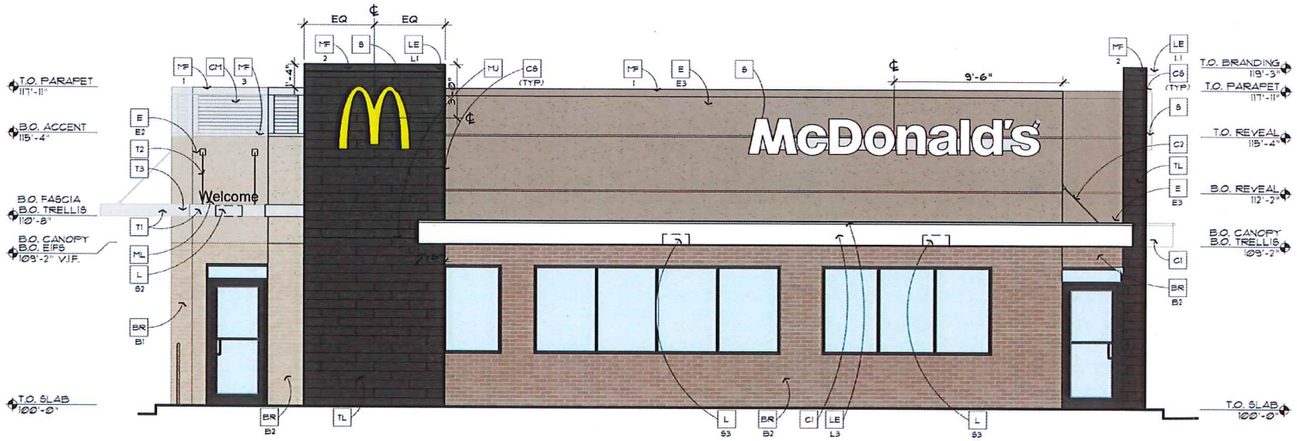

1 FRONT ELEVATION
1/4" = 1'-0"

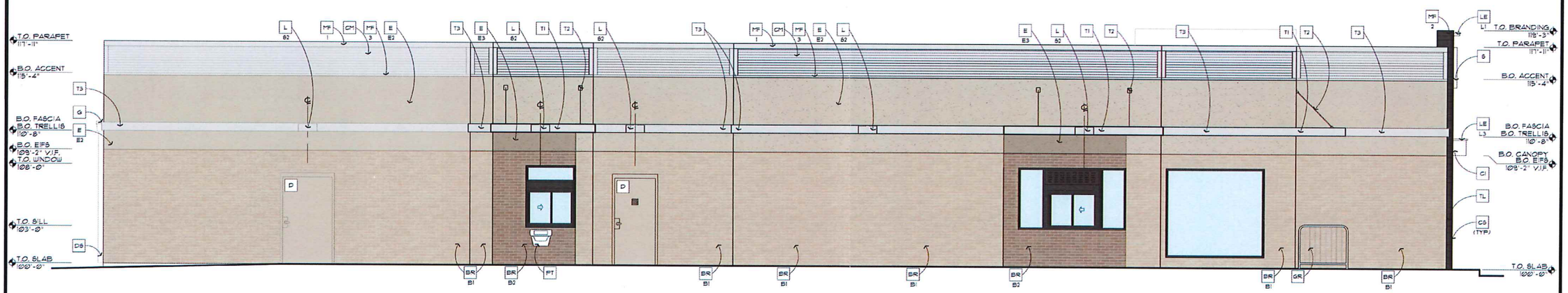

2 DRIVE THRU ELEVATION
1/4" = 1'-0"

KEY NOTES:

- BR — THIN BRICK
  - COLOR:
  - B1 = "TUMBLEWEED VELOUR" BY BELDEN OR EQUAL
  - B2 = "SEAL BROWN VELOUR" BY BELDEN OR EQUAL
- C1 — ALUMINUM CANOPY SYSTEM (COLOR: WHITE)
- C2 — ALUMINUM CANOPY TIE-BACK SYSTEM
- CM — CORRUGATED METAL PANEL, SEE ASSEMBLY NOTES ON A3.0. COLOR: CITYSCAPE BY METAL-ERA
- CS — OUTSIDE CORNER STRIPS
  - COLOR: BRUSHED ANTIQUE BRONZE
  - BY: SCHLUTER SYSTEMS L.P.
  - CONTACT: EARL MAICUS, (518) 324-3410
- D — DOOR - PAINTED TO MATCH SURROUNDING MATERIAL 'E2'
- DS — NEW DOWNSPOUT TO BE PAINTED TO MATCH SURROUNDING MATERIAL 'E2'
- E — EXTERIOR FINISH SYSTEM
  - COLOR:
  - E1= NOT USED
  - E2= BENJAMIN MOORE 'BLEEKER BEIGE BM HC-80'
  - E3= BENJAMIN MOORE 'ALEXANDRIA BEIGE BM HC-77'
- G — NEW GUTTER TO BE PAINTED TO MATCH SURROUNDING MATERIAL 'E2'
- GR — NEW GUARDRAIL - STAINLESS STEEL/GALVANIZED SEE DETAIL - X/AXX
- L — LIGHT FIXTURE (WALL SCONCE) - SEE ELECTRICAL
  - WALL SCONCE:
  - S1 = NOT USED
  - S2 = DOWN ONLY FIXTURE
  - S3 = UP AND DOWN FIXTURE
- LE — ACCENT LIGHTING - SEE ELECTRICAL
  - LED LIGHT:
  - L1 = DOWN ONLY FIXTURE
  - L2 = NOT USED
  - L3 = INTEGRAL CANOPY FIXTURE
- MF — METAL FASCIA - COLOR TO MATCH CORRUGATED METAL PANEL, REFER TO SECTIONS FOR ADD'L INFO
  - TYPE:
  - 1 = PRE-FAB ANCHOR-TITE FASCIA
  - 2 = PRE-FAB CUSTOM ARCADE FASCIA
  - 3 = METAL COPING
- MJ — TILE MOVEMENT JOINT - SEE 7/A3.0 FOR ADD'L INFO (MOVEMENT JOINTS MUST BE MAINTAINED OVER TIME W/ SEALANT)
- ML — METAL LETTERING - BY OTHERS
- PT — (RMHC) COIN COLLECTOR UNIT #UPT DT12000 STD CALL 1-888-743-7435 TO ORDER, SEE DETAIL X/AXX
- RL — NEW ROOF LADDER - PAINTED TO MATCH SURROUNDING MATERIAL 'E2'
- S — McDONALD'S SIGNAGE BY OTHERS - UNDER SEPARATE PERMIT. SEE SIGNAGE SUPPORT NOTE ON THIS SHEET.
- T1 — ALUMINUM TRELLIS
- T2 — TRELLIS TIE-BACK
- T3 — 2x8 ALUMINUM WALL FASCIA
- TL — TILE BY EURONEST: E-WOOD COLLECTION
  - COLOR: R9 BLACK SIZE:6"x36"
  - W/ SCHLUTER STRIP
  - CONTACT: JAN DETER 714-937-7500
- WX — EXTERIOR WINDOW ASSEMBLY W/ TEMPERED GLASS - SEE ASSEMBLY NOTES 9/A2.1
- W2 — DRIVE-THRU WINDOW BY READY ACCESS 600 SERIES, 36" SERVICE HEIGHT WITH TRANSOM - CONFIRM OPTIONS WITH MCD AREA CONSTRUCTION MANAGER
  - SLIDE DIRECTION: RL = RIGHT TO LEFT, LR = LEFT TO RIGHT

SIGNAGE SUPPORT NOTE:
UNIBODY FASCIA SIGN WALL SUPPORTS TO BE VERIFIED WITH McDONALD'S ACM AND COORDINATED WITH SIGN MANUFACTURER.

reprise Architecture, Inc.
12400 Portland Avenue South
Suite 130, Portland Corporate Center
Burnsville, MN 55337
Office: (952) 890-0499
Fax: (952) 252-4043

DESIGN

I hereby certify that this plan, specification or report was prepared by me or under my direct supervision and that I am a duly registered ARCHITECT under the laws of the State of WISCONSIN

Signature BRIAN R. JOHNSON
XX/XX/XXXX 9143-005
Date Registration Number

McDONALD'S RESTAURANT

2016 MAJOR REMODEL PROGRAM

State Site Code: 048-0101 Nat'l Number: 4067
2901 DRYDEN DR. MADISON, WISCONSIN

EXTERIOR ELEVATIONS

© 2016 McDonald's USA, LLC

PREPARED FOR: McDonald's USA, LLC

These drawings and specifications are the confidential and proprietary property of McDonald's USA, LLC and are not to be copied or reproduced without written authorization. The contract documents were prepared for use on this specific project in McDonald's restaurant number 4067. Subsequent use for use on a different site or at a later time, in whole or in part, without the express consent of the project requires the services of properly licensed architects and engineers. Reproduction of the contract documents for use on another project is not authorized.

DATE ISSUED XX/XX/XXXX

DRAWN BY	AL
CHECKED BY	KD
JOB NO.	16068

A2.0

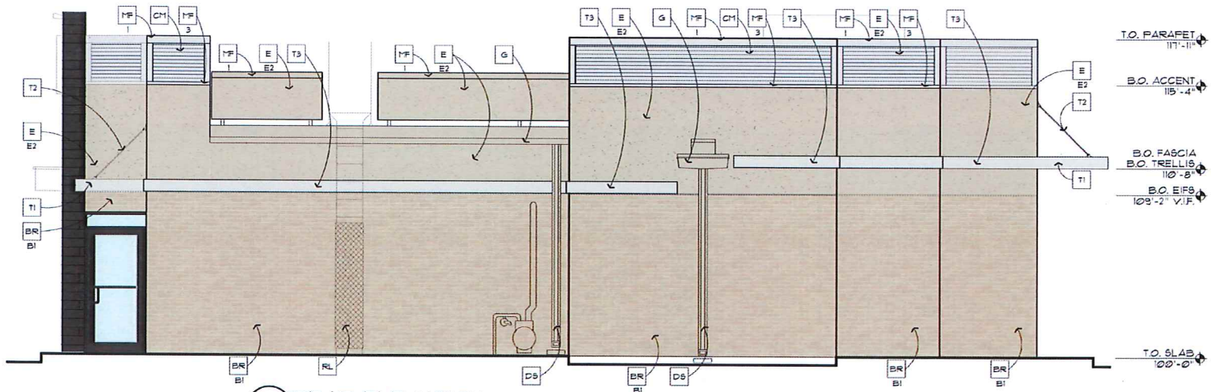

1 REAR ELEVATION
1/4" = 1'-0"

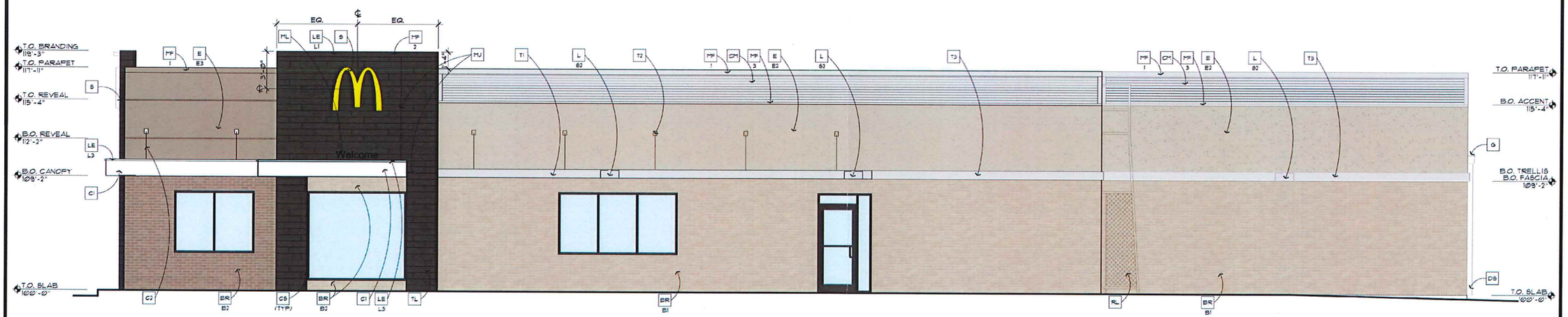

2 NON-DRIVE THRU ELEVATION
1/4" = 1'-0"

KEY NOTES:

BR THIN BRICK
B1 COLOR:
B1 = "TUMBLEWEED VELOUR" BY BELDEN OR EQUAL
B2 = "SEAL BROWN VELOUR" BY BELDEN OR EQUAL

C1 ALUMINUM CANOPY SYSTEM (COLOR: WHITE)

C2 ALUMINUM CANOPY TIE-BACK SYSTEM

CM CORRUGATED METAL PANEL, SEE ASSEMBLY NOTES ON A3.0, COLOR: CITYSCAPE BY METAL-ERA

CS OUTSIDE CORNER STRIPS
COLOR: BRUSHED ANTIQUE BRONZE
BY: SCHLUTER SYSTEMS L.P.
CONTACT: EARL MAICUS, (818) 324-3410

D DOOR - PAINTED TO MATCH SURROUNDING MATERIAL 'E2'

DS NEW DOWNSPOUT TO BE PAINTED TO MATCH SURROUNDING MATERIAL 'E2'

E EXTERIOR FINISH SYSTEM
E1 COLOR:
E1= NOT USED
E2= BENJAMIN MOORE 'BLEEKER BEIGE BM HC-80'
E3= BENJAMIN MOORE 'ALEXANDRIA BEIGE BM HC-77'

G NEW GUTTER TO BE PAINTED TO MATCH SURROUNDING MATERIAL 'E2'

GR NEW GUARDRAIL - STAINLESS STEEL/GALVANIZED SEE DETAIL - X/AXX

L LIGHT FIXTURE (WALL SCONCE) - SEE ELECTRICAL
S1 WALL SCONCE:
S1 = NOT USED
S2 = DOWN ONLY FIXTURE
S3 = UP AND DOWN FIXTURE

LE ACCENT LIGHTING - SEE ELECTRICAL
L1 LED LIGHT:
L1 = DOWN ONLY FIXTURE
L2 = NOT USED
L3 = INTEGRAL CANOPY FIXTURE

MF METAL FASCIA - COLOR TO MATCH CORRUGATED METAL PANEL, REFER TO SECTIONS FOR ADD'L INFO
1 TYPE:
1 = PRE-FAB ANCHOR-TITE FASCIA
2 = PRE-FAB CUSTOM ARCADE FASCIA
3 = METAL COPING

MJ TILE MOVEMENT JOINT - SEE 1/A3.0 FOR ADD'L INFO (MOVEMENT JOINTS MUST BE MAINTAINED OVER TIME W/ SEALANT)

ML METAL LETTERING - BY OTHERS

PT (RMHC) COIN COLLECTOR
UNIT #UPT DT20000 STD
CALL 1-888-743-7435 TO ORDER,
SEE DETAIL X/AXX

RL NEW ROOF LADDER - PAINTED TO MATCH SURROUNDING MATERIAL 'E2'

S McDONALD'S SIGNAGE BY OTHERS - UNDER SEPARATE PERMIT. SEE SIGNAGE SUPPORT NOTE ON THIS SHEET.

T1 ALUMINUM TRELLIS

T2 TRELLIS TIE-BACK

T3 2x8 ALUMINUM WALL FASCIA

TL TILE BY EUROWEST: E-WOOD COLLECTION
COLOR: R9 BLACK SIZE:6"x36"
W/ SCHLUTER STRIP
CONTACT: JAN DETER 714-937-7500

WK EXTERIOR WINDOW ASSEMBLY W/ TEMPERED GL.ASS - SEE ASSEMBLY NOTES 3/A2.1

WD DRIVE-THRU WINDOW BY READY ACCESS 600 SERIES, 36" SERVICE HEIGHT WITH TRANSOM - CONFIRM OPTIONS WITH MCD AREA CONSTRUCTION MANAGER
XX SLIDE DIRECTION: RL = RIGHT TO LEFT
LR = LEFT TO RIGHT

SIGNAGE SUPPORT NOTE:
UNIBODY FASCIA SIGN WALL SUPPORTS TO BE VERIFIED WITH McDONALD'S ACM AND COORDINATED WITH SIGN MANUFACTURER.

reprise DESIGN
Architecture, Inc.
12400 Portland Avenue South
Suite 100, Portland Corporate Center
Burnsville, Minnesota 55337
Office: (952) 252-4242
Fax: (952) 252-4243

I hereby certify that this plan, specification or report was prepared by me or under my direct supervision and that I am a duly registered ARCHITECT under the laws of the State of WISCONSIN

Signature BRIAN R. JOHNSON
Date XX/XX/XXXX
Registration Number 9143-005

McDONALD'S RESTAURANT
2016 MAJOR REMODEL PROGRAM
State Site Code: 048-0101 Nat'l Number: 4067
2901 DRYDEN DR. MADISON, WISCONSIN

EXTERIOR ELEVATIONS

© 2016 McDonald's USA, LLC

PREPARED FOR:
McDonald's USA, LLC

These drawings and specifications are the confidential and proprietary property of McDonald's USA, LLC and are not to be copied or reproduced without written authorization. The contract documents were prepared for use on this specific site and project. Modifications to these documents are required for use on a different site or at a later time. Reproducible copies of these documents are available for a reasonable charge. Use of project requires the services of properly licensed architects and engineers. Reproduction of the contract documents for reuse on another project is not authorized.

DATE ISSUED XX/XX/XXXX

DRAWN BY AL
CHECKED BY KD
JOB NO. 16068

A2.1

TYPICAL RESTROOM

FOR FINISH REFERENCE ONLY. G.C. TO VERIFY ACTUAL RESTROOM DIMENSIONS AND AND FIXTURE PLACEMENT.

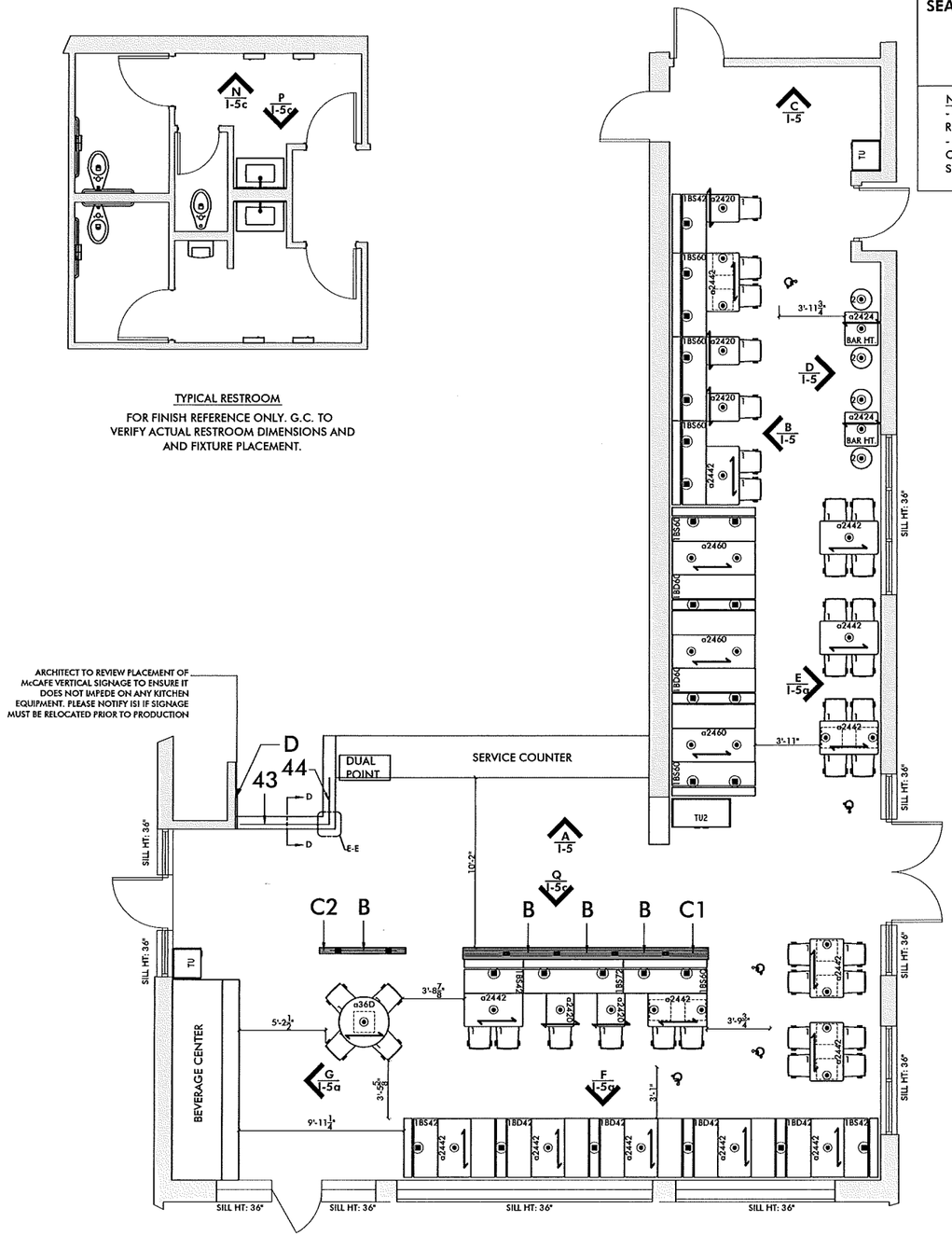

MAIN DINING SEATING RATIO:

3.5

SEATS:	92	TABLES:	26
ONE'S	-		-
TWO'S	18		9
THREE'S	-		-
FOUR'S	56		14
FIVES & UP	18		3
	5	5% W.C. ACCESSIBLE	

NOTE:
- THIS IS PROPRIETARY TO ISI. ANY UNAUTHORIZED USE OR REPRODUCTION IS STRICTLY PROHIBITED.
- ISI WILL NOT BE HELD LIABLE FOR NON-ISI ITEMS THE CUSTOMER PURCHASED AND DO NOT FIT IN THE INTENDED SPACE.

FLOOR PLAN KEY

HIGH CHAIR | WHEELCHAIR ACCESSIBLE

- 3" DIA. CORED SUPPORT
- 3" DIA. CORED SUPPORT w/ LARGE PLATE
- 3" DIA. CORED SUPPORT w/ OFF-SET PLATE
- EXISTING HALFWALL
- ISI HALFWALL
- GRAIN DIRECTION
- TOP CAP DECOR

SCOPE OF WORK
CHAIRS TO BE REPLACED
BOOTHS TO BE REPLACED
DINING TABLES TO BE REPLACED
TRASH UNITS TO BE REPLACED
GENERAL LIGHTING TO BE REPLACED
PENDANT LIGHTING TO BE REPLACED
GRAPHIC WALL COVERING TO BE INSTALLED
WAINSCOTING TO BE REPLACED
CHAIR RAIL TO BE REPLACED
HALF WALLS TO BE REPLACED
BEVERAGE CENTER TOP AND FACE TO BE REFINISHED
FRONT SERVICE COUNTER FACE AND TOP TO BE REFINISHED
TABLE, BOOTH, AND CHAIR STEEL TO BE REPLACED
DECOR ELEMENTS TO BE ADDED
RESTROOM STALL PARTITIONS TO BE REPLACED
RESTROOM WALL TILE TO BE REPLACED; WALL COVERING TO BE REPLACED

PRELIMINARY PLANS
NOT FOR CONSTRUCTION

National #: 4067
Site ID: 480101

Account Executive
Jim Zielinski
414-232-3502
jzielinski@isiamerica.com

Contact
Dion Conn
414-324-7004
charles.conn@partners.mcd.com

Drawn By
JFG
Date Drawn
1/12/16

Designer
Kelley Bush
414-847-0659
kbush@isiamerica.com

Location
2901 Dryden Drive
Madison, WI
53704

Project Manager
Scott Wustrack
920-926-9071
swustrack@isiamerica.com

INTERIOR SYSTEMS

Rev	Date	Description	By

Project Number
106068

Sheet Title.
Floor Plan

Scale.
3/16" = 1'-0"

Sheet.
I-2