CITY OF MADISON

CITY ENGINEERING DIVISION
DEPARTMENT OF PUBLIC WORKS
PLAN OF PROPOSED IMPROVEMENT
NAUTILUS POINT PARK WIDENED SIDEWALK
CONTRACT 8717 PLAN SUPPLEMENT

Madison, Wisconsin

INDEX OF SHEETS

SHEET NO.	D1	NOTES AND DETAILS
SHEET NO.	EC1	EROSION CONTROL
SHEET NO.	R1-R2	REMOVALS
SHEET NO.	P1-P4	PATH PLAN & PROFILES
SHEET NO.	C1	CURB RAMP DETAILS
SHEET NO.	PM1	PAVEMENT MARKINGS
SHEET NO.	X1-X7	CROSS SECTIONS
SHEET NO.	MQ-1	MISCELLANEOUS QUANTITIES

CONVENTIONAL SIGNS
FIELD VERIFY ALL UTILITY LOCATIONS

GAS	G
STORM SEWER	ST
SANITARY SEWER	SN
WATER	W
BURIED ELECTRIC	E
OVERHEAD ELECTRIC	OH
POWER POLE	
ADA COMPLIANT RAMP W/ DETECTABLE WARNING FIELD	
COMBUSTIBLE FLUIDS	

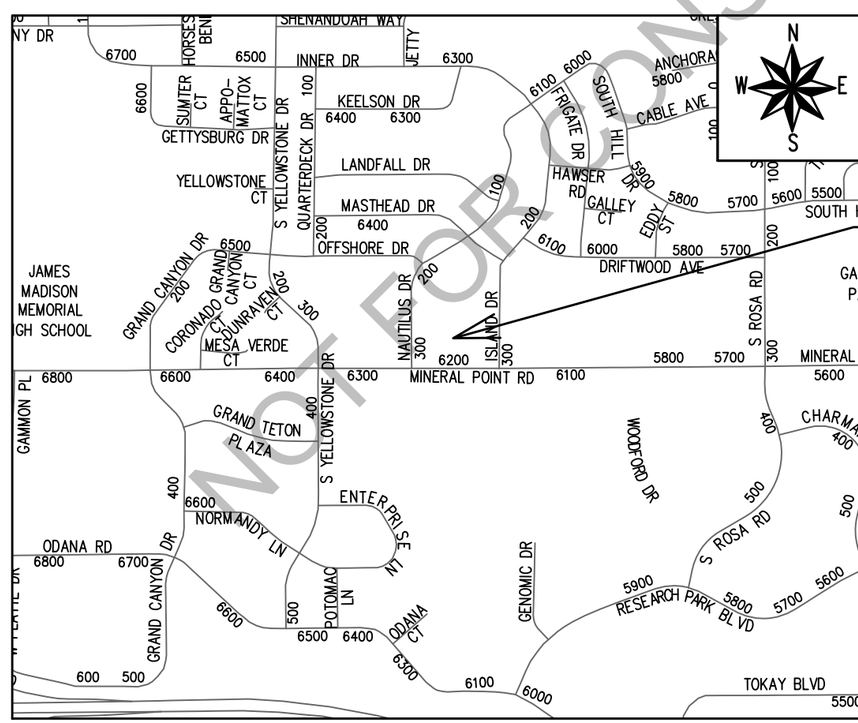

PROJECT LOCATION

NOT FOR CONSTRUCTION

CITY PROJECT NO. 13925
CONTRACT NO. 8717

PUBLIC IMPROVEMENT PROJECT APPROVED

APPROVED DATE

BY THE COMMON COUNCIL OF MADISON, WISCONSIN

PUBLIC IMPROVEMENT DESIGN APPROVED BY:

City Engineer Date

STREET DESIGNED BY:

PAVEMENT MARKINGS DESIGNED BY:

PLOT SCALE: 1:1_XREF
PLOT NAME: ---
REV. DATE: 6/17/2024 11:36 AM
ORIGINATOR: CITY_OF_MADISON

FILE NAME: M:\DESIGN\Projects\13925\CAD\Streets\13925EN-Title.dwg DATE: 7/1/2024 10:38 AM

GENERAL NOTES:

1) 3" HMA PAVEMENT - TYPE 4 LT 58-28 S
2) 8" BASE AGGREGATE DENSE 1 1/4-INCH
3) 6" TOPSOIL, TERRACE SEED MIX, CLASS I, URBAN TYPE B ORGANIC MATTING
4) 6" TOPSOIL, AGGRESSIVE NATIVE SEED MIX, CLASS I, URBAN TYPE A ORGANIC MATTING
5) CONTRACTOR CAN NARROW 1' EXTENSION OF 8" BASE AGGREGATE DENSE 1 1/4-INCH TO 0.5' WHEN WITHIN 5' OF TREES

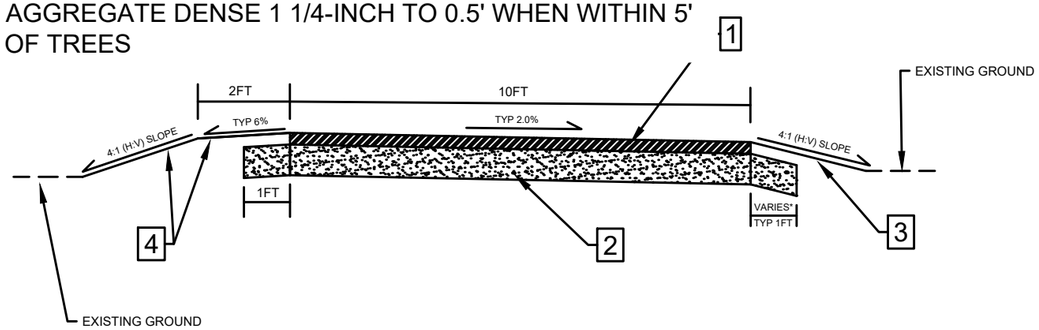

FINISHED TYPICAL SECTION
WIDENED SIDEWALK - MINERAL PT RD
(STA 100+10 - 103+30)

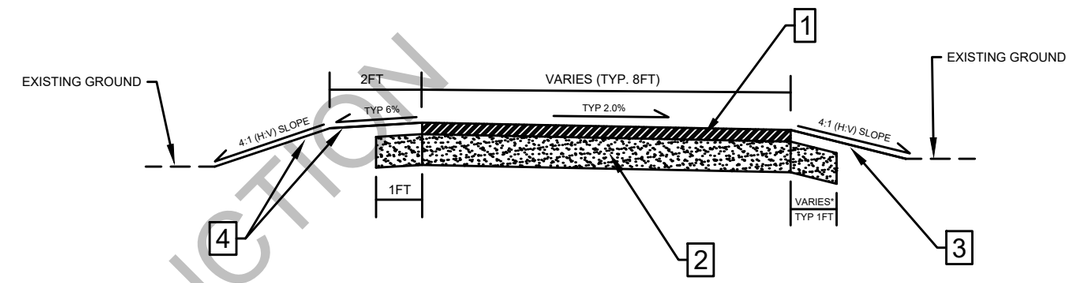

FINISHED TYPICAL SECTION
WIDENED SIDEWALK - MINERAL PT RD
(STA 103+30 - 103+80.88)

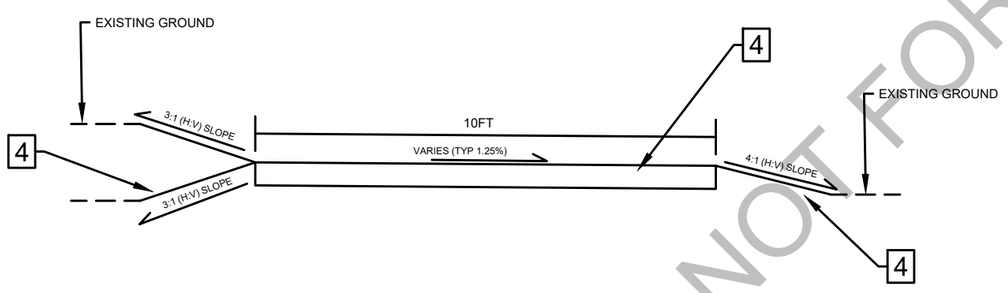

FINISHED TYPICAL SECTION
MAINTENANCE PATH WEST - MINERAL PT RD
(STA 300+00 - 301+00)

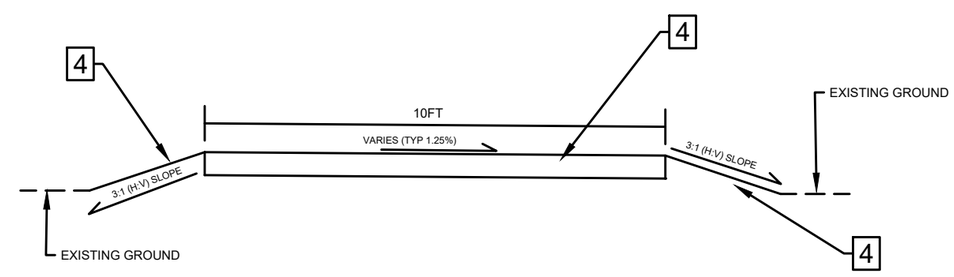

FINISHED TYPICAL SECTION
MAINTENANCE PATH EAST - MINERAL PT RD
(STA 200+00 - 201+00)

NOT FOR CONSTRUCTION

MARK	REVISION	DATE	BY

Designed By: JN | Date: 7/1/2024 10:39 AM | Scale: Custom | D-1

13925

MADISON, WI

CONTRACT NO: 8717

TYPICAL SECTIONS

NAUTILUS POINT PARK WIDENED SIDEWALK

M:\DESIGN\Projects\13925\CAD\Streets\13925EN-Typical.dwg

13925

D-1

NOTES:
1. SEED ALL AREAS WITHIN THE TERRACE (BETWEEN SIDEWALK AND STREET) WITH TERRACE SEED MIX PER ARTICLE 207 OF THE CITY OF MADISON STANDARD SPECIFICATIONS FOR PUBLIC WORKS CONSTRUCTION.
2. SEED ALL OTHER AREAS WITH AGGRESSIVE NATIVE SEED MIX PER ARTICEL 207 OF THE CITY OF MADISON STANDARD SPECIFICATIONS FOR PUBLIC WORKS CONSTRUCTION.
3. ALL AREAS SHALL RECEIVE CLASS I, URBAN TYPE A ORGANIC MATTING.
4. NO ROOT CUTTING IS ALLOWED WITHOUT CITY OF MADISON FORESTRY APPROVAL

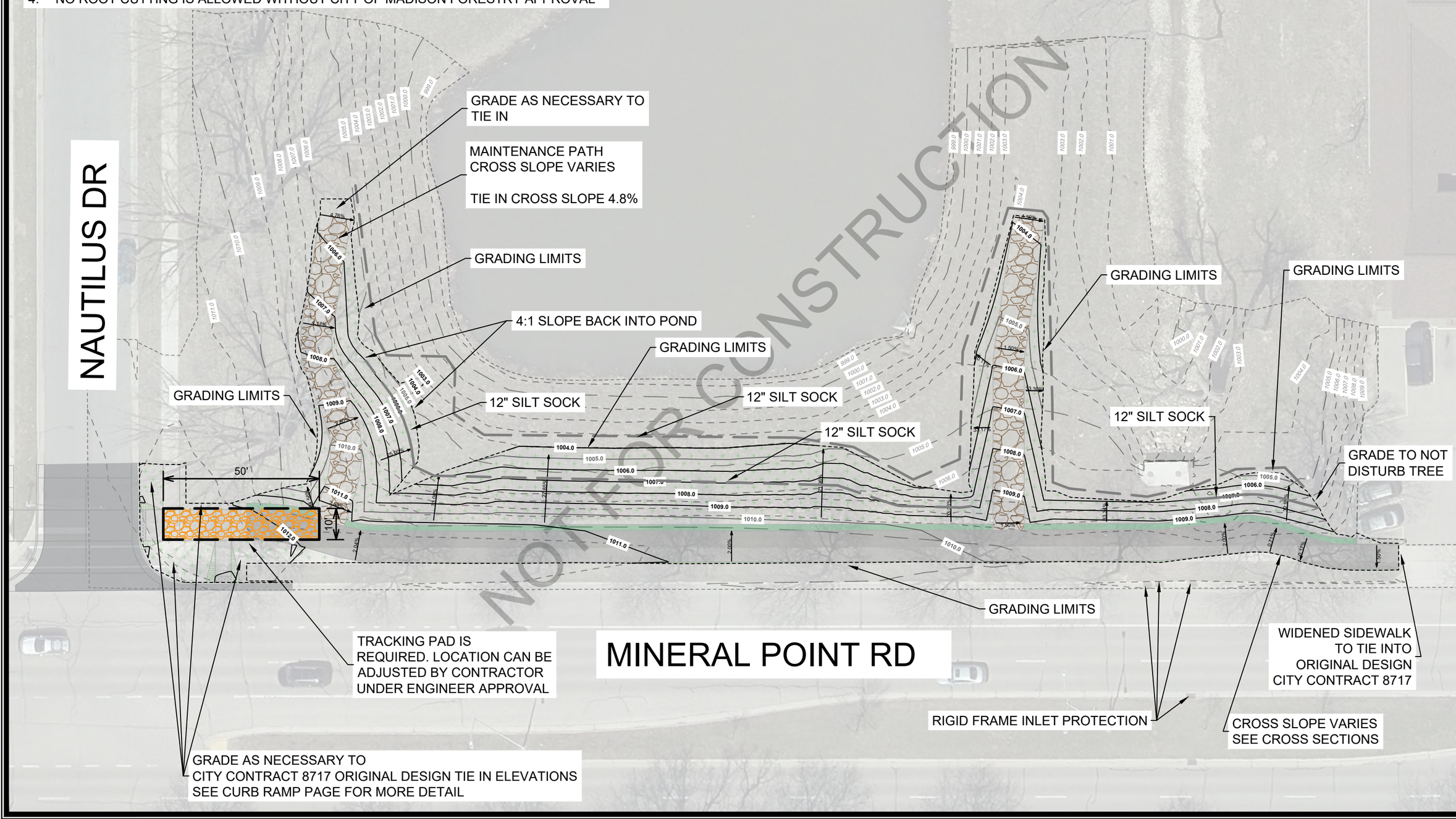

MARK	REVISION	DATE	BY
--	--	--	--
--	--	--	--
--	--	--	--
--	--	###	--

Designed By: JN | Date: 7/1/2024 10:39 AM | Scale: 1:30

13925

EC-1

13925

MADISON, WI

CONTRACT NO: 8717

GRADING PLAN AND EROSION CONTROL

NAUTILUS POINT PARK WIDENED SIDEWALK

M:\DESIGN\Projects\13925\CAD\Streets\13925EN-EC.dwg

13925

EC-1

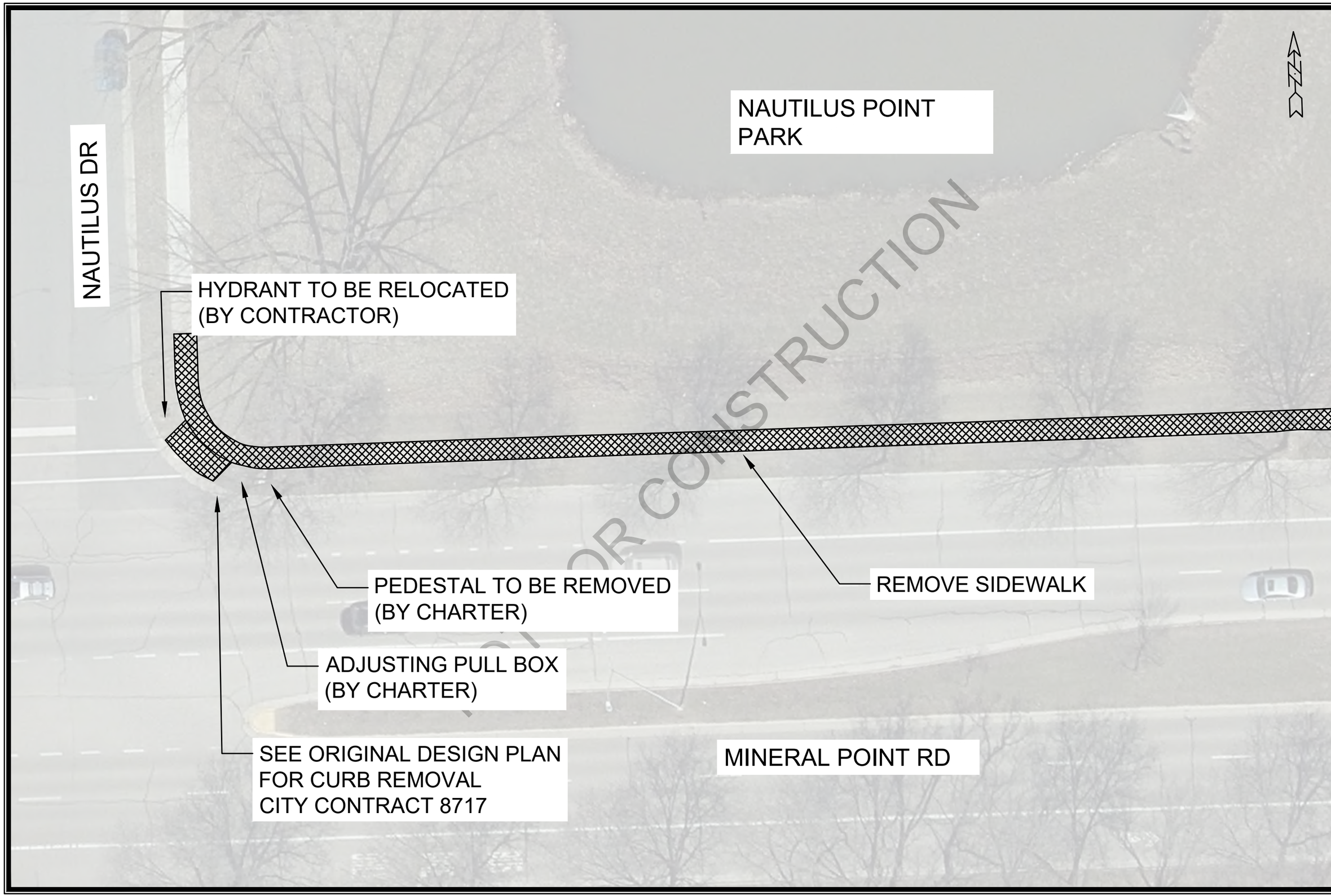

NOT FOR CONSTRUCTION

MARK	REVISION	DATE	BY
--	--	--	--
--	--	--	--
--	--	--	--
--	--	--	--

Designed By: JN
Date: 7/1/2024 10:39 AM
Scale: 1" = 20'

13925

13925

MADISON, WI

CONTRACT NO: 8717

WIDENED SIDEWALK REMOVALS

NAUTILUS POINT PARK WIDENED SIDEWALK

M:\DESIGN\Projects\13925\CAD\Plan Sheets\Widened Sidewalk Removals - (2).dwg

13925

R-1

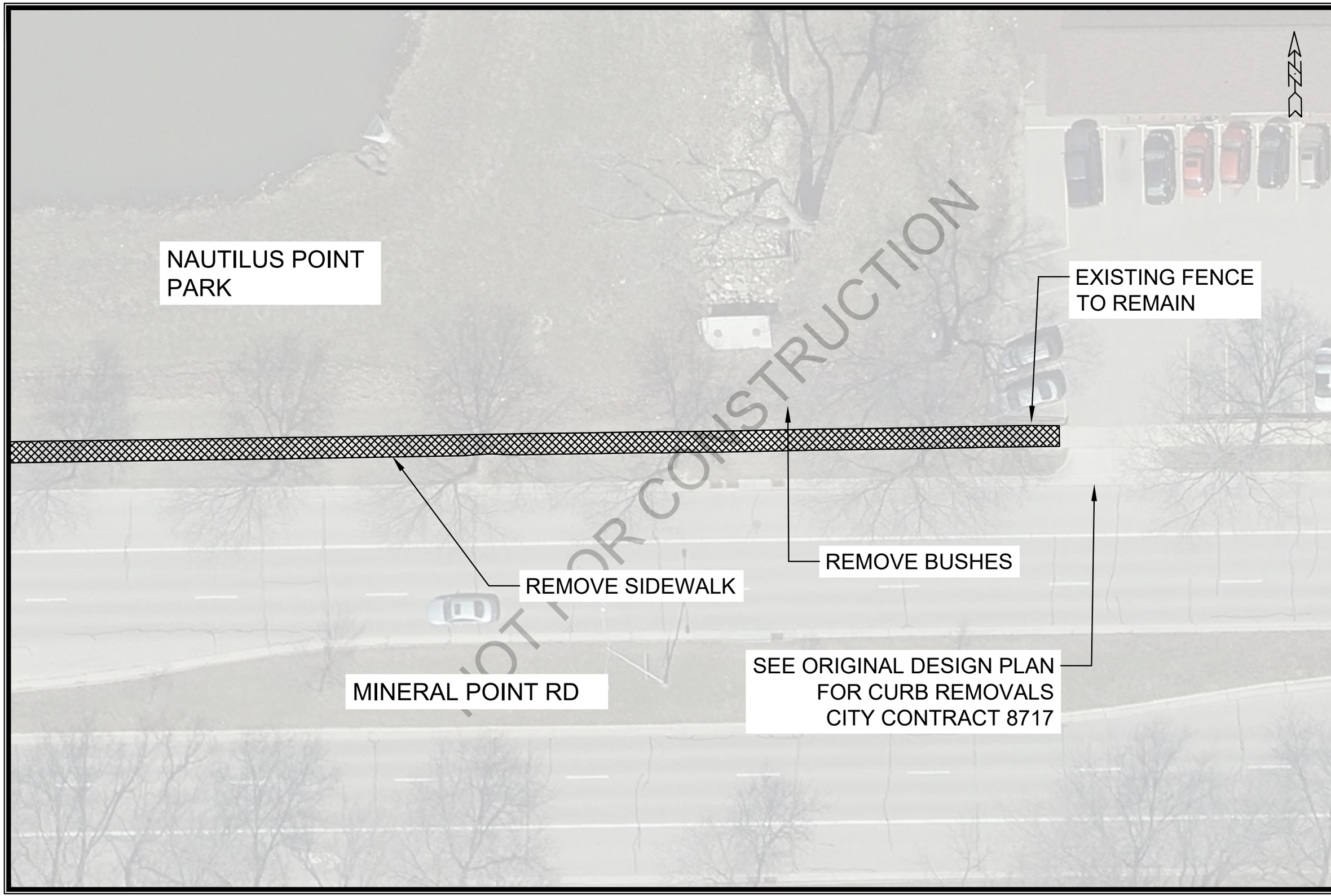

MARK	REVISION	DATE	BY
--	--	--	--
--	--	--	--
--	--	--	--
--	--	--	--

Designed By: JN
Date: 7/1/2024 10:39 AM
Scale: 1" = 20'

13925

R-2

13925

MADISON, WI

CONTRACT NO: 8717

WIDENED SIDEWALK REMOVALS

NAUTILUS POINT PARK WIDENED SIDEWALK

M:\DESIGN\Projects\13925\CAD\Plan Sheets\Widened Sidewalk Removals - (2).dwg

13925

R-2

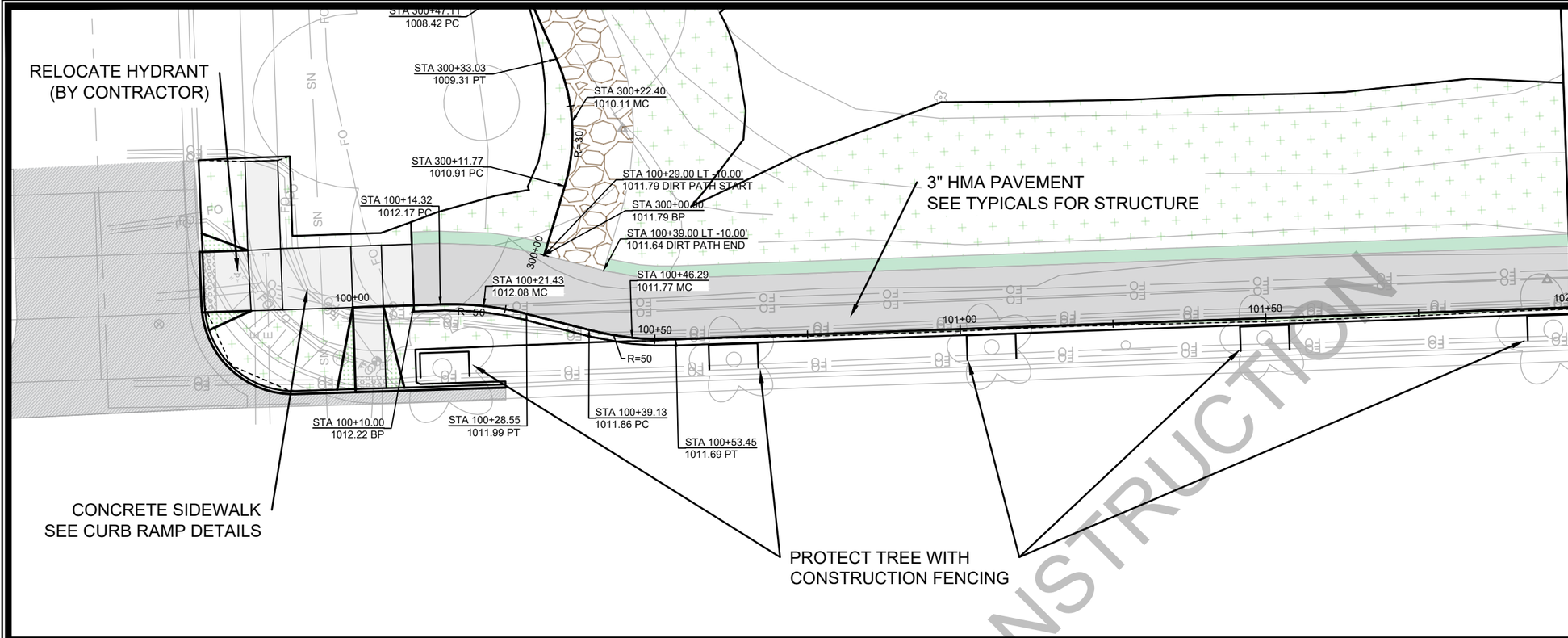

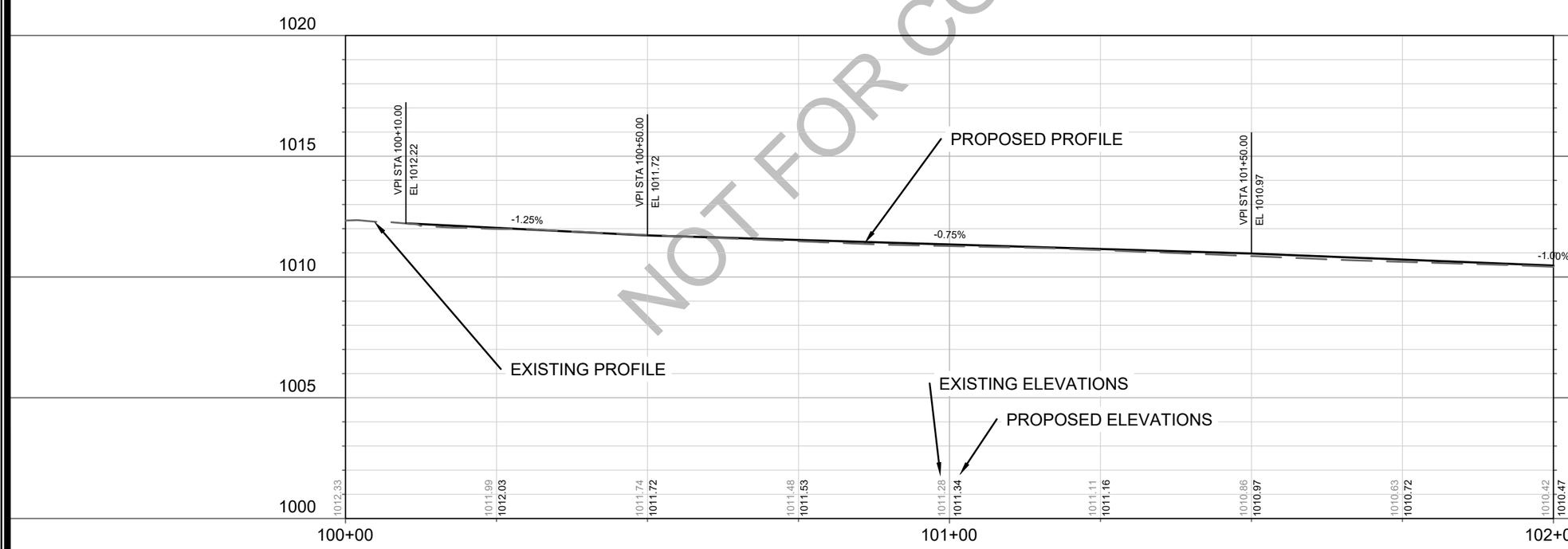

NOT FOR CONSTRUCTION

MARK	REVISION	DATE	BY

Designed By: JN
Date: 7/1/2024 10:40 AM
Scale: 1" = 20'
13925
P1

13925

MADISON, WI

CONTRACT NO: 8717

WIDENED SIDEWALK PLAN AND PROFILE

NAUTILUS POINT PARK WIDENED SIDEWALK

M:\DESIGN\Projects\13925\CAD\Plan Sheets\Widened Sidewalk - (1).dwg

13925

P1

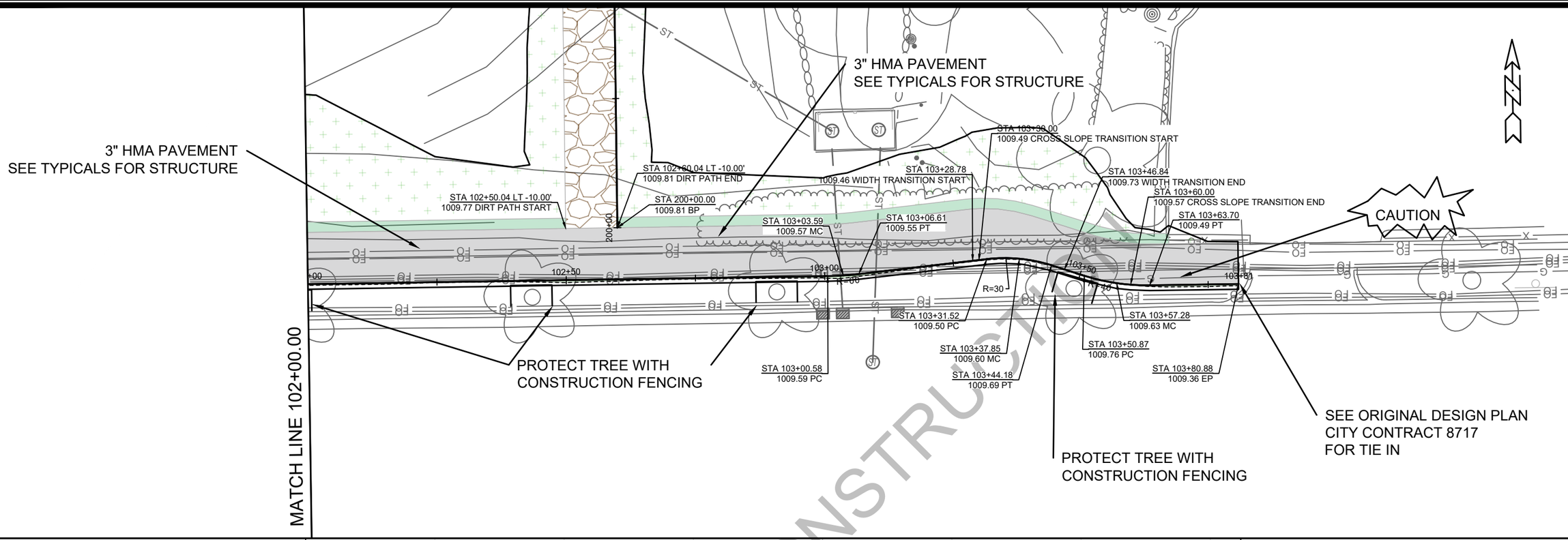

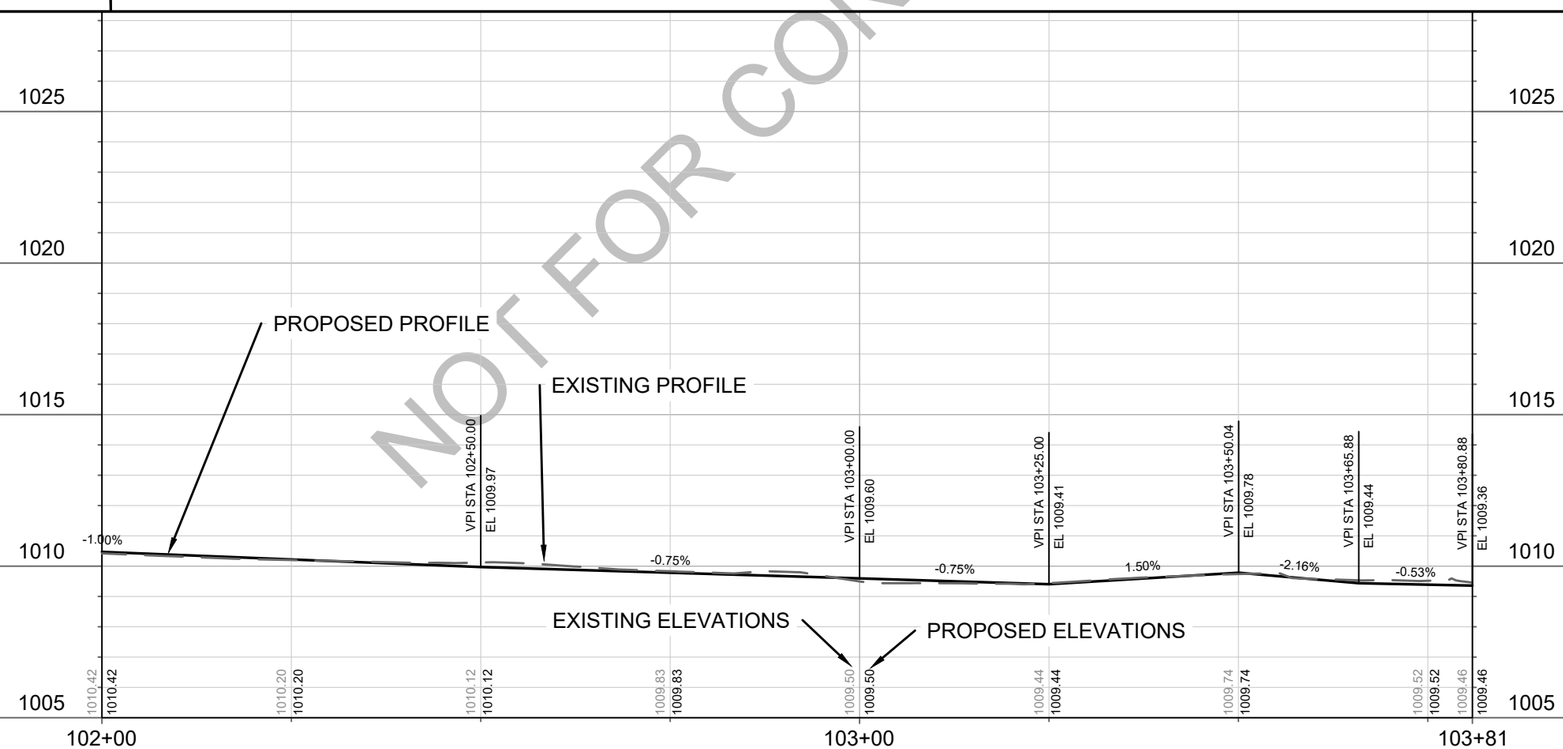

MARK	REVISION	DATE	BY

Designed By: JN
Date: 7/1/2024 10:40 AM
Scale: 1" = 20'

13925

MADISON, WI

CONTRACT NO: 8717

WIDENED SIDEWALK PLAN AND PROFILE

NAUTILUS POINT PARK WIDENED SIDEWALK

M:\DESIGN\Projects\13925\CAD\Plan Sheets\Widened Sidewalk - (1).dwg

13925

P2

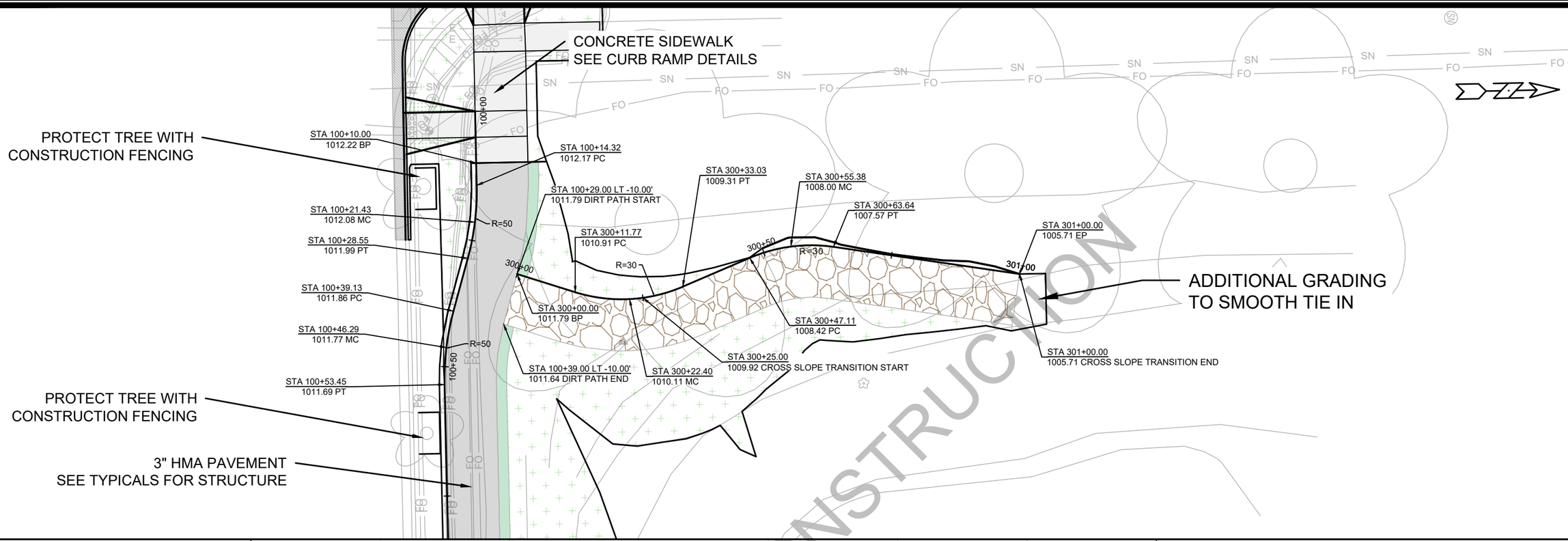

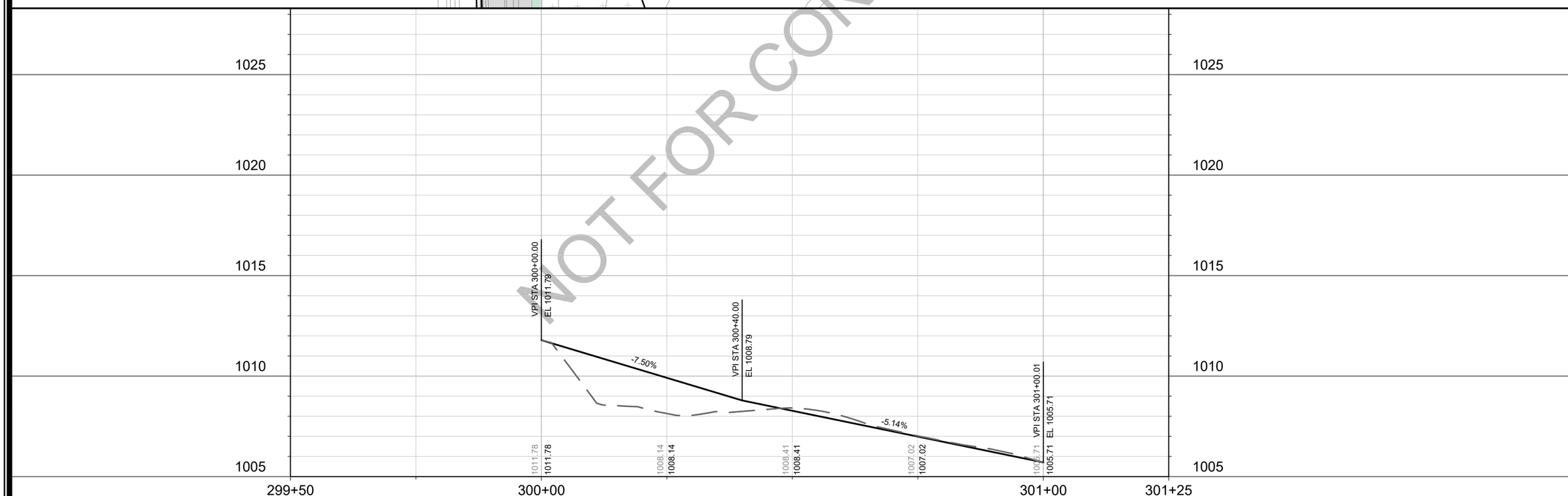

MARK	REVISION	DATE	BY

Designed By: JN | Date: 7/1/2024 10:40 AM | Scale: 1" = 20'

13925 | P3

13925

MADISON, WI

CONTRACT NO: 8717

MAINTENANCE PATH WEST PLAN AND PROFILE

NAUTILUS POINT PARK WIDENED SIDEWALK

M:\DESIGN\Projects\13925\CAD\Plan Sheets\Maintenance Path West - (2).dwg

13925

P3

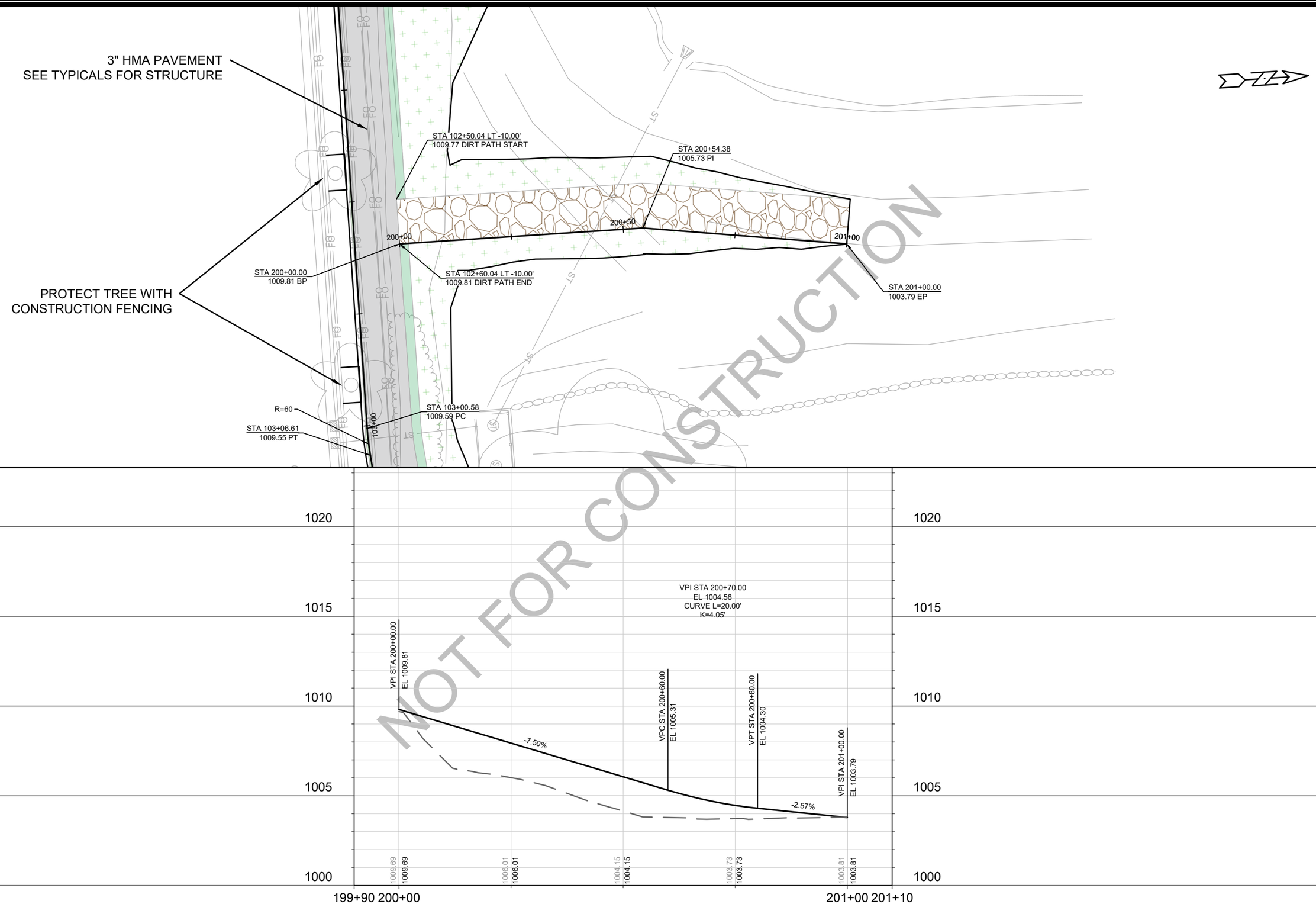

MARK	REVISION	DATE	BY
--	--	--	--
--	--	--	--
--	--	--	--
--	--	--	--

Designed By: JN
Date: 7/1/2024 10:41 AM
Scale: 1" = 20'

13925

P4

13925

MADISON, WI

CONTRACT NO: 8717

MAINTENANCE PATH EAST PLAN AND PROFILE

NAUTILUS POINT PARK WIDENED SIDEWALK

M:\DESIGN\Projects\13925\CAD\Plan Sheets\Maintenance Path East - (2).dwg

CITY OF MADISON WISCONSIN

13925

P4

GENERAL NOTES:
SEE CITY CONTRACT 8717
FOR HATCHED AREA/FLOW
LINE DETAILS

CURB RAMPS SHOWN HAVE
NON-TRAVERSABLE FLARES

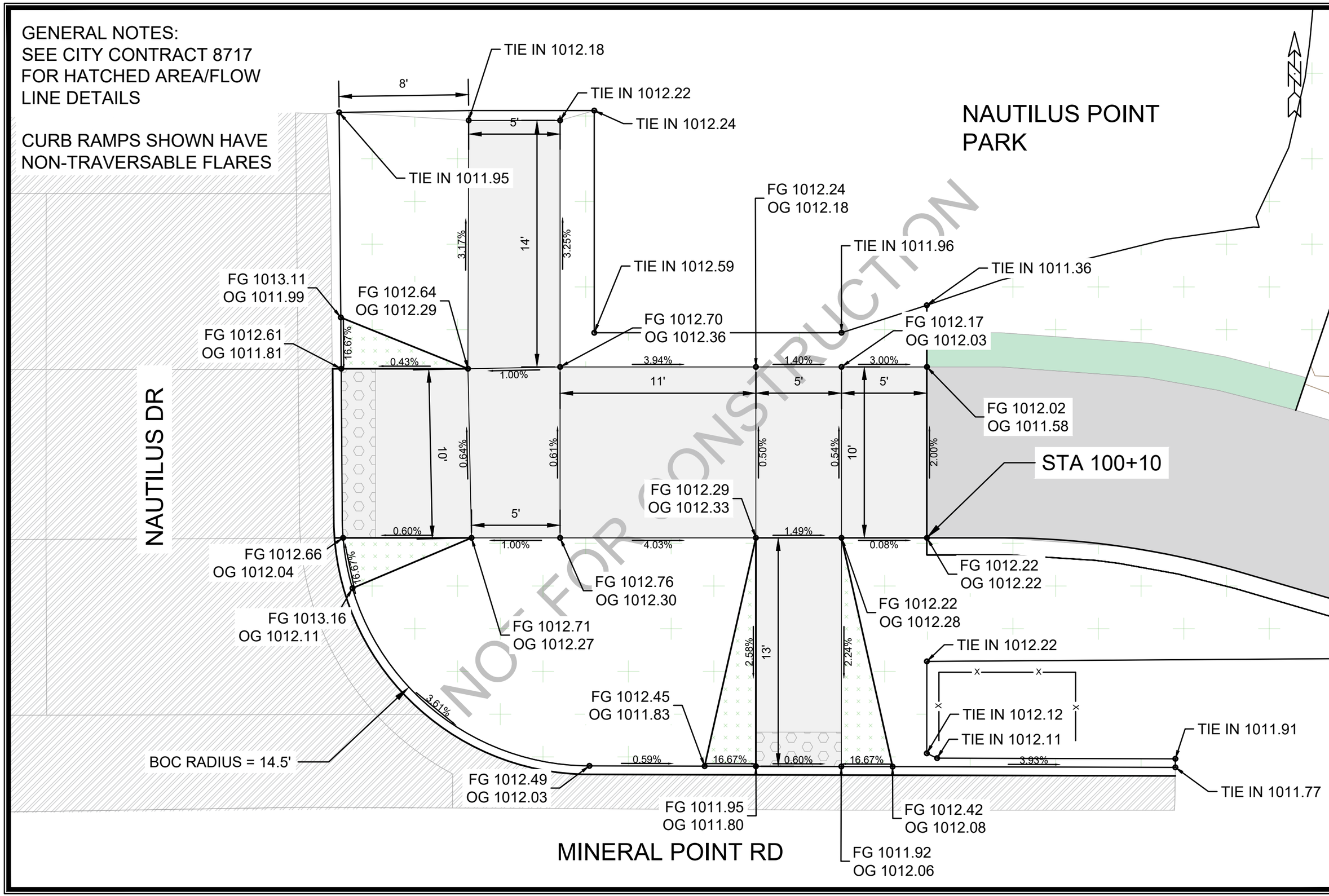

MARK	REVISION	DATE	BY
--	--	--	--
--	--	--	--
--	--	--	--
--	--	--	--

Designed By: JN
Date: 7/1/2024 10:41 AM
Scale: 1" = 5'
C-1

13925

MADISON, WI

CONTRACT NO: 8717

CURB RAMP DETAILS

NAUTILUS POINT PARK WIDENED SIDEWALK

M:\DESIGN\Projects\13925\CAD\Streets\13925EN-CurbRamps.dwg

13925

C-1

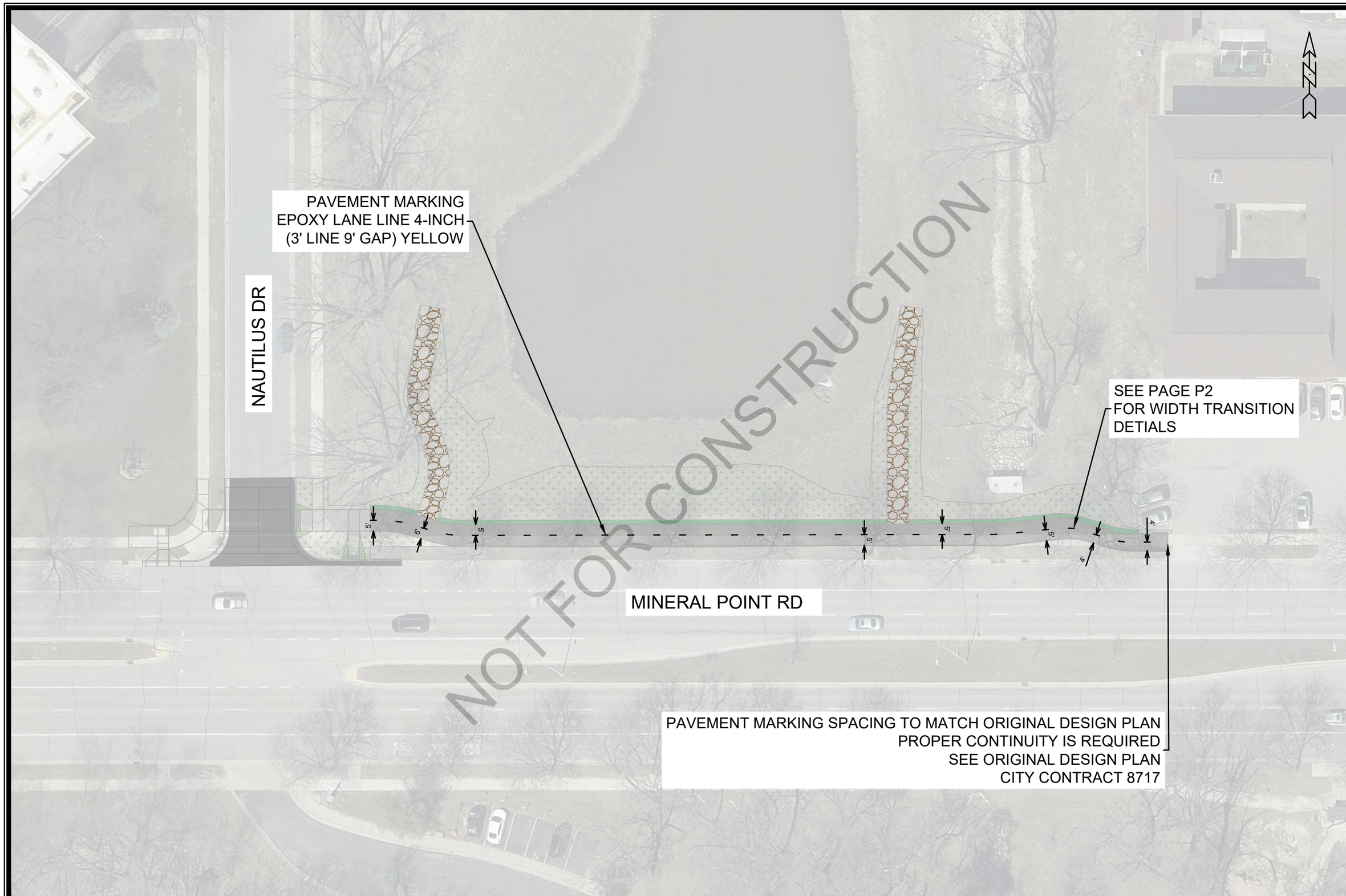

MARK	REVISION	DATE	BY
--	--	--	--
--	--	--	--
--	--	--	--
--	--	--	--

Designed By: JN
Date: 7/1/2024 10:41 AM
Scale: 1:40
13925
PM1

13925

MADISON, WI

CONTRACT NO: 8717

PAVEMENT MARKING

NAUTILUS POINT PARK WIDENED SIDEWALK

M:\DESIGN\Projects\13925\CAD\Traffic\13925EN-PAVEMENT MARKING.dwg

13925

PM1

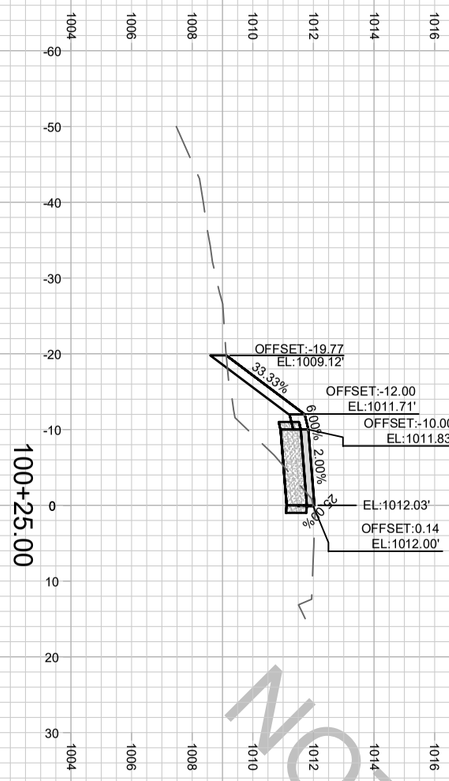

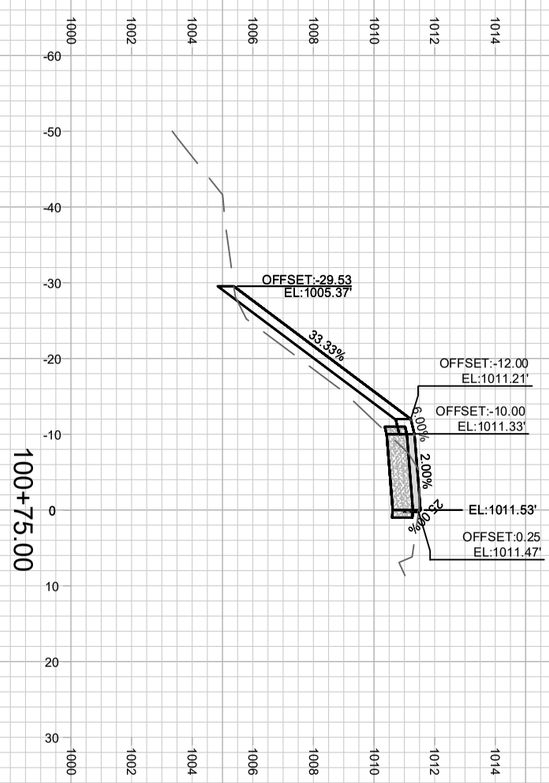

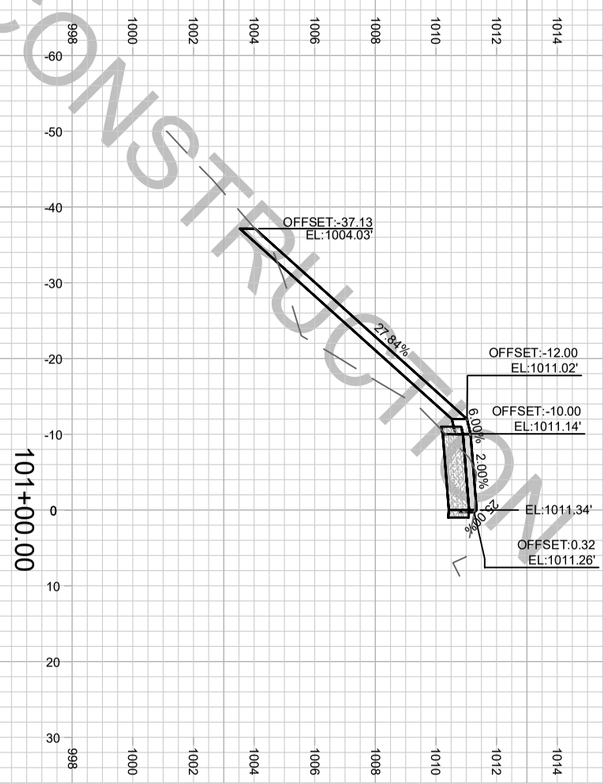

NOT FOR CONSTRUCTION

X-1

13925

WIDENED SIDEWALK CROSS SECTIONS 13925

NAUTILUS POINT PARK WIDENED SIDEWALK MADISON, WI

M:\DESIGN\Projects\13925\CAD\Streets\13925EN-Street.dwg CONTRACT NO: 8717

MARK	REVISION	DATE	BY
--	--	--	--
--	--	--	--
--	--	--	--
--	--	--	--

Designed By: JN | Date: 7/1/2024 10:41 AM | Scale: 1 IN:20 FT

13925 X-1

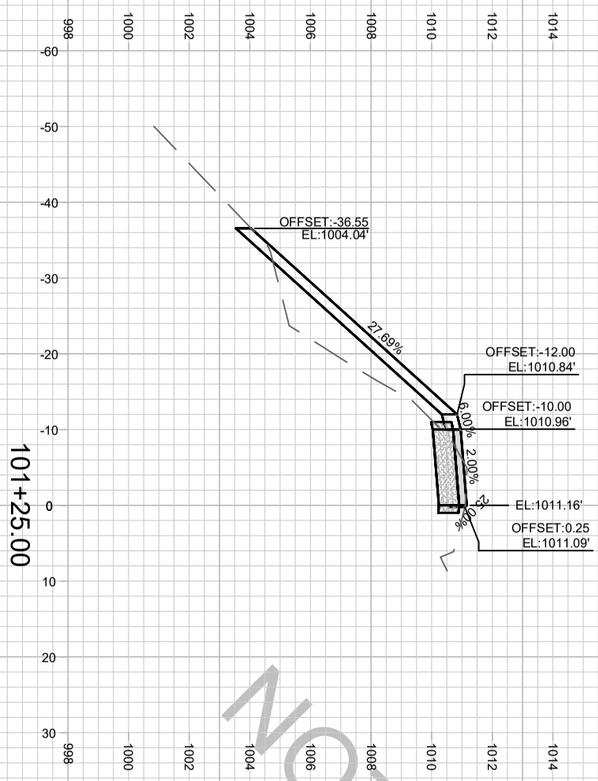

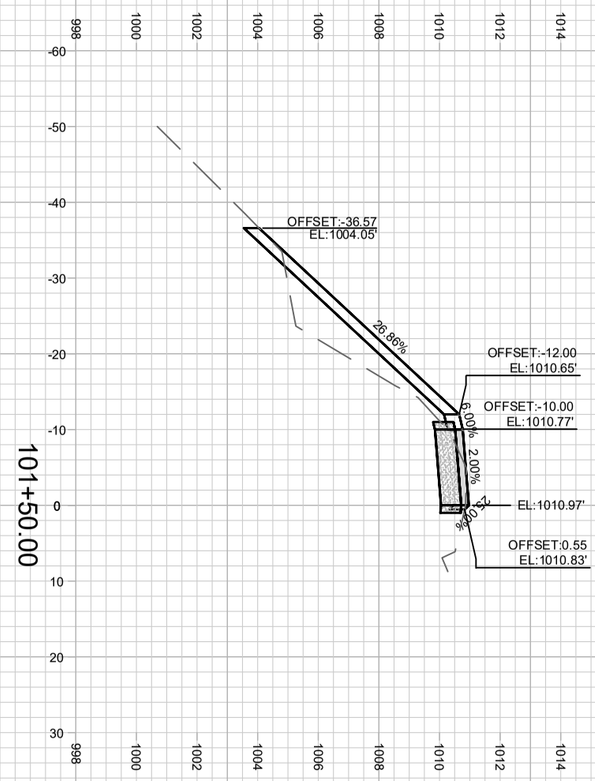

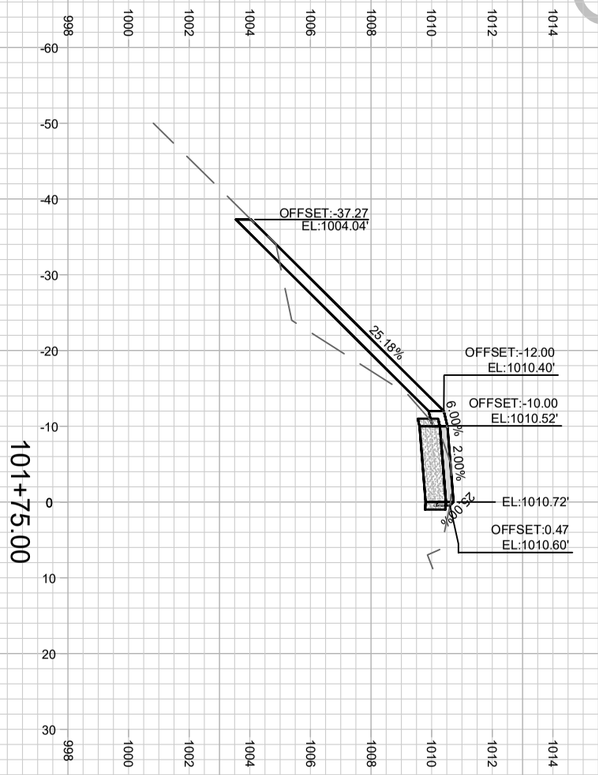

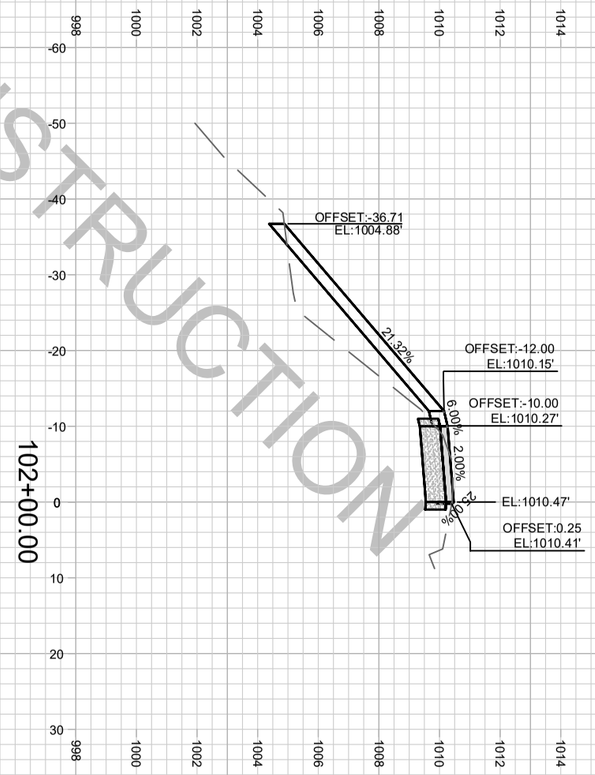

NOT FOR CONSTRUCTION

X-2

13925

WIDENED SIDEWALK CROSS SECTIONS 13925

NAUTILUS POINT PARK WIDENED SIDEWALK MADISON, WI

M:\DESIGN\Projects\13925\CAD\Streets\13925EN-Street.dwg CONTRACT NO: 8717

MARK	REVISION	DATE	BY
--	--	--	--
--	--	--	--
--	--	--	--
--	--	--	--

Designed By: JN | Date: 7/1/2024 10:41 AM | Scale: 1 IN:20 FT

13925 X-2

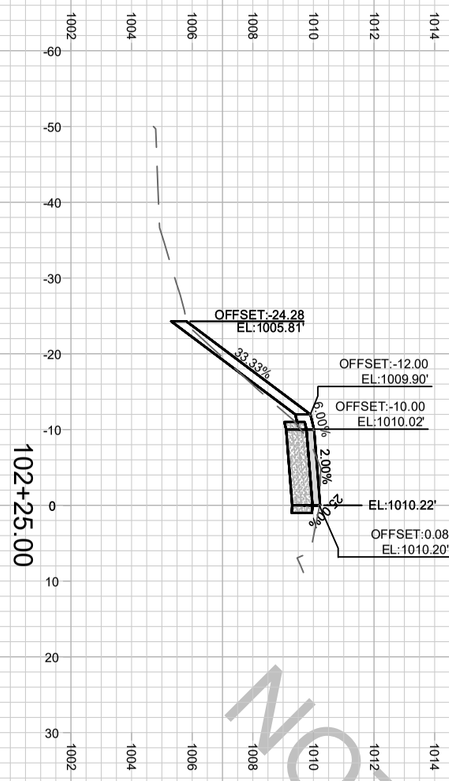

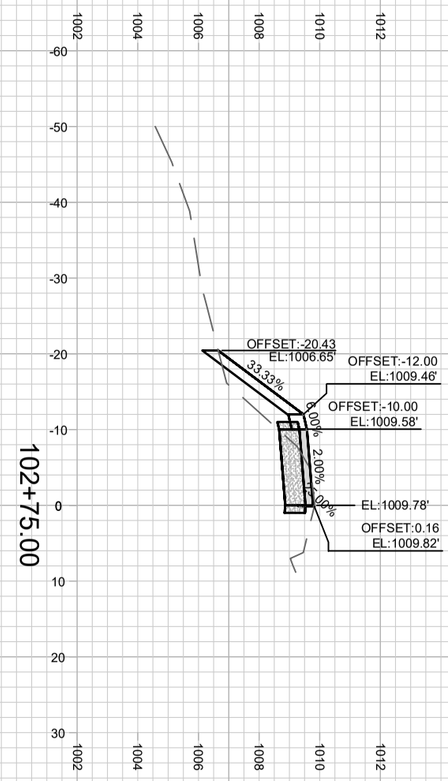

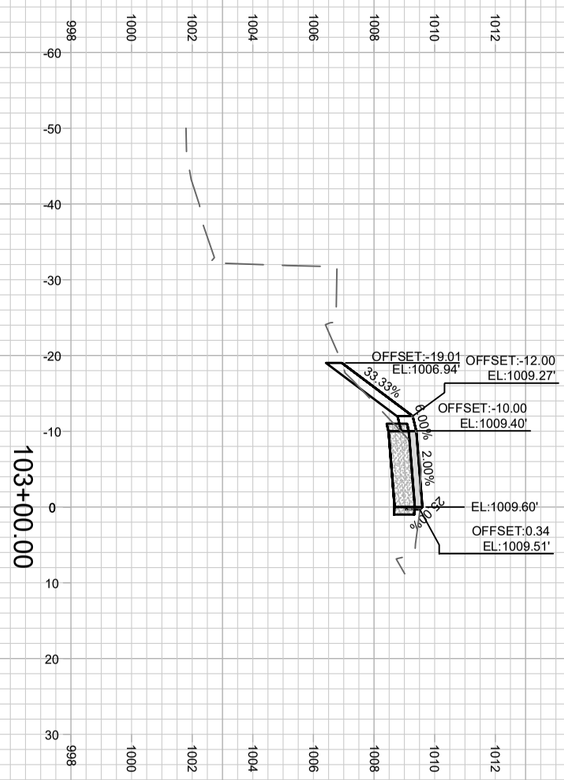

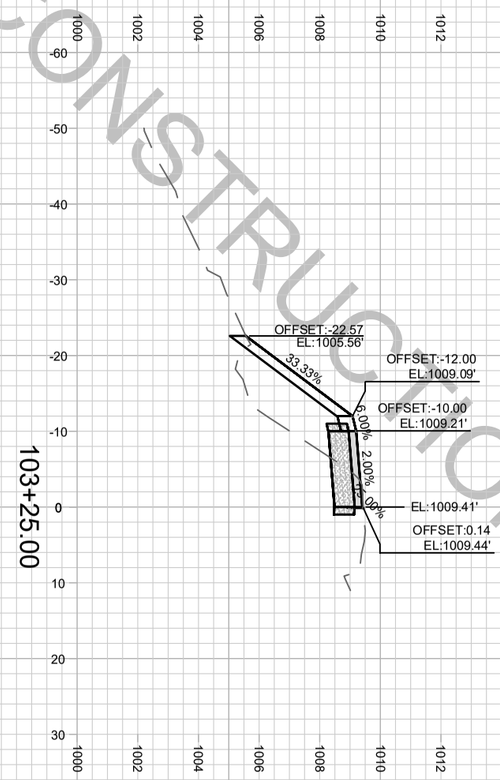

NOT FOR CONSTRUCTION

X-3

13925

WIDENED SIDEWALK CROSS SECTIONS 13925

NAUTILUS POINT PARK WIDENED SIDEWALK MADISON, WI

M:\DESIGN\Projects\13925\CAD\Streets\13925EN-Street.dwg CONTRACT NO: 8717

MARK	REVISION	DATE	BY
--	--	--	--
--	--	--	--
--	--	--	--
--	--	--	--

Designed By: JN | Date: 7/1/2024 10:41 AM | Scale: 1 IN:20 FT

13925 X-3

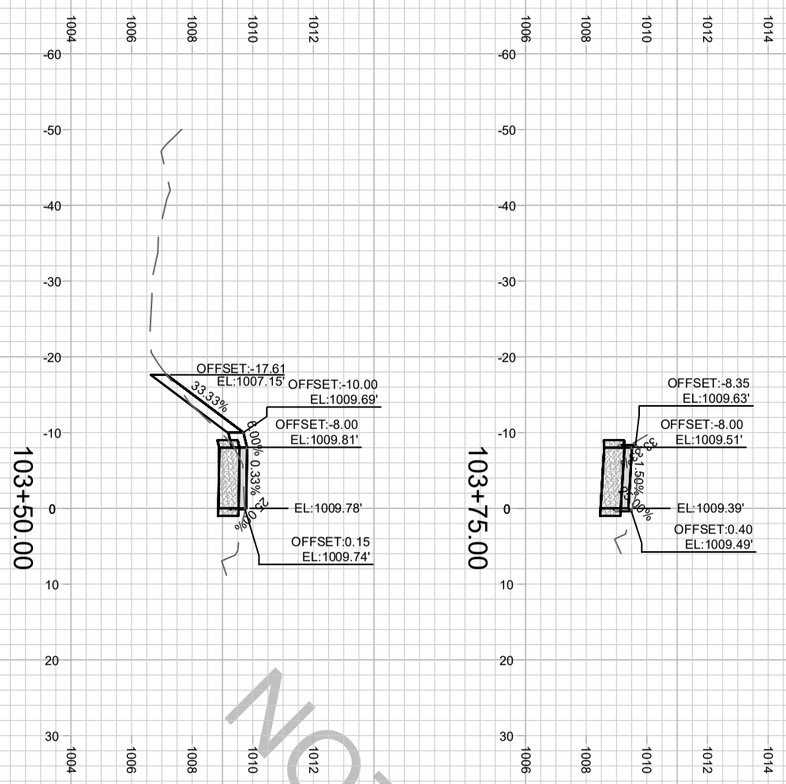

NOT FOR CONSTRUCTION

X-4

13925

WIDENED SIDEWALK CROSS SECTIONS 13925

NAUTILUS POINT PARK WIDENED SIDEWALK MADISON, WI

M:\DESIGN\Projects\13925\CAD\Streets\13925EN-Street.dwg CONTRACT NO: 8717

MARK	REVISION	DATE	BY
--	--	--	--
--	--	--	--
--	--	--	--
--	--	--	--

Designed By: JN | Date: 7/1/2024 10:41 AM | Scale: 1 IN:20 FT

13925 X-4

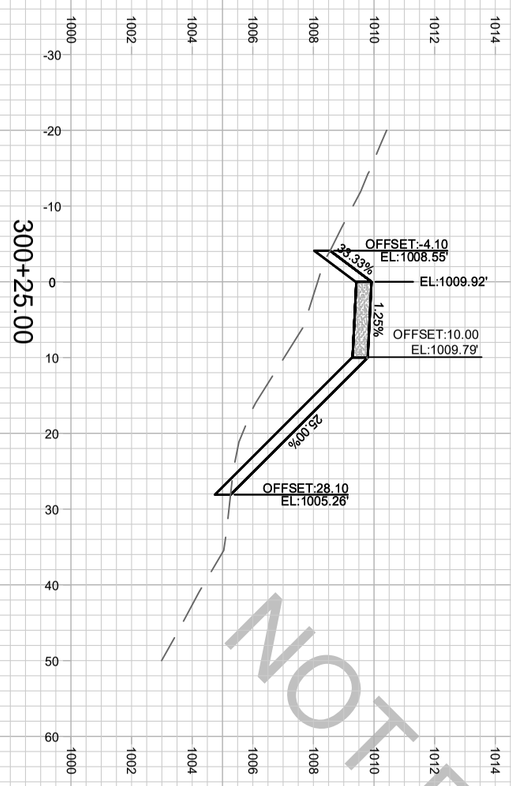

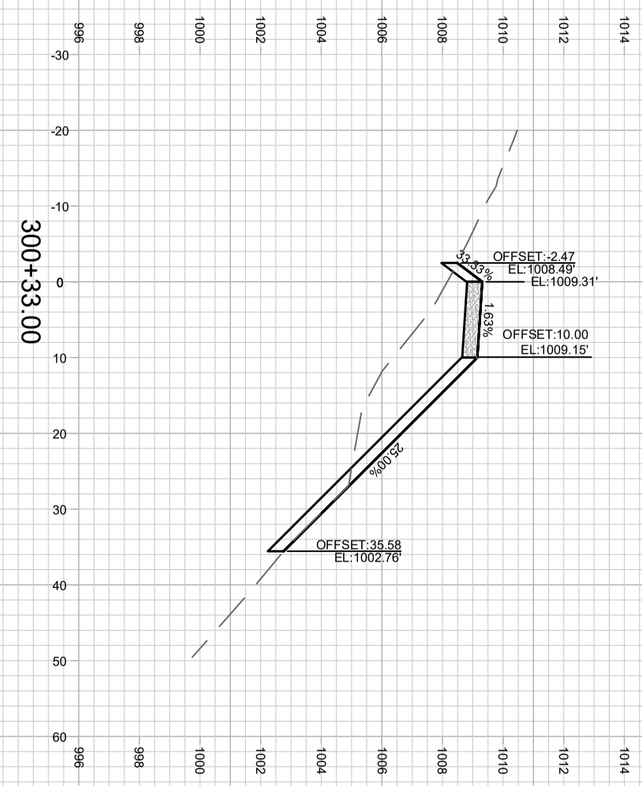

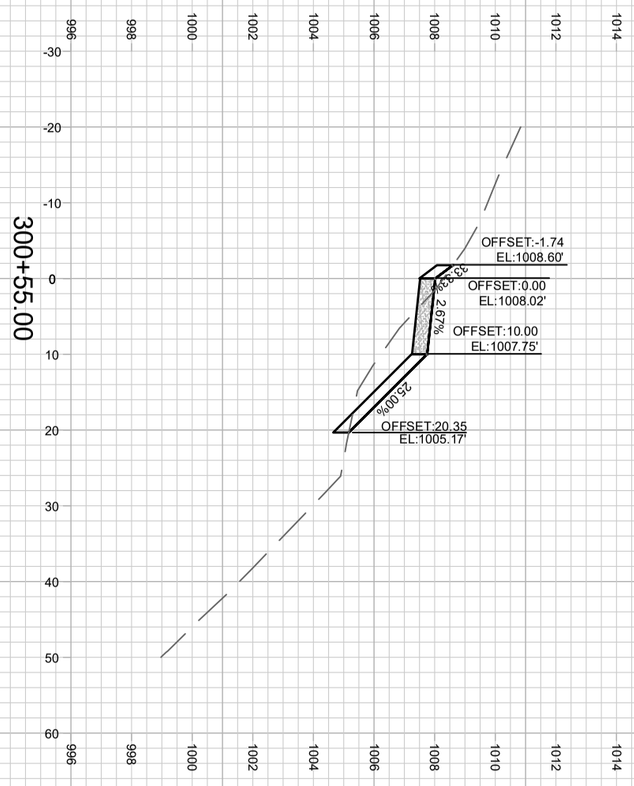

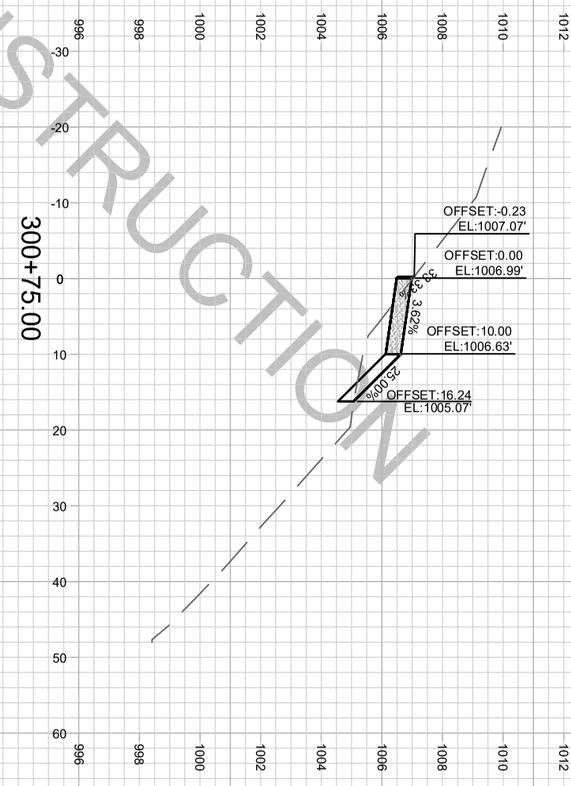

NOT FOR CONSTRUCTION

X-5

13925

MAINTENANCE PATH WEST CROSS SECTIONS 13925

NAUTILUS POINT PARK WIDENED SIDEWALK MADISON, WI

M:\DESIGN\Projects\13925\CAD\Streets\13925EN-Street.dwg CONTRACT NO: 8717

MARK	REVISION	DATE	BY
--	--	--	--
--	--	--	--
--	--	--	--
--	--	--	--

Designed By: JN | Date: 7/1/2024 10:41 AM | Scale: 1 IN:20 FT

13925 X-5

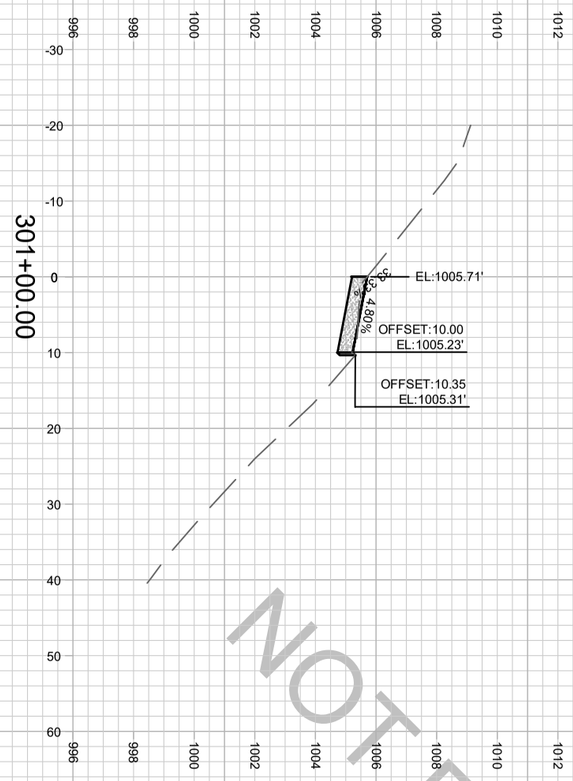

NOT FOR CONSTRUCTION

X-6

13925

MAINTENANCE PATH WEST CROSS SECTIONS 13925

NAUTILUS POINT PARK WIDENED SIDEWALK MADISON, WI

M:\DESIGN\Projects\13925\CAD\Streets\13925EN-Street.dwg CONTRACT NO: 8717

MARK	REVISION	DATE	BY
--	--	--	--
--	--	--	--
--	--	--	--
--	--	--	--

Designed By: JN | Date: 7/1/2024 10:41 AM | Scale: 1 IN:20 FT

13925 X-6

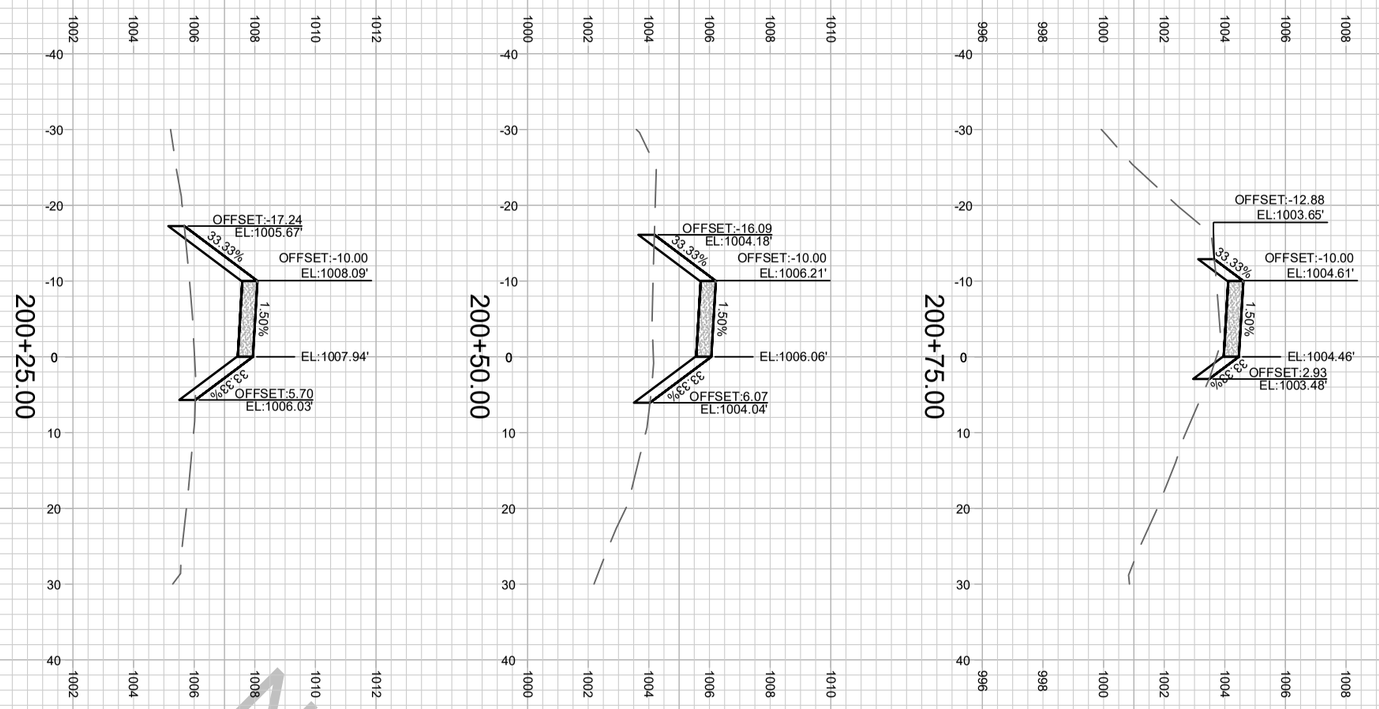

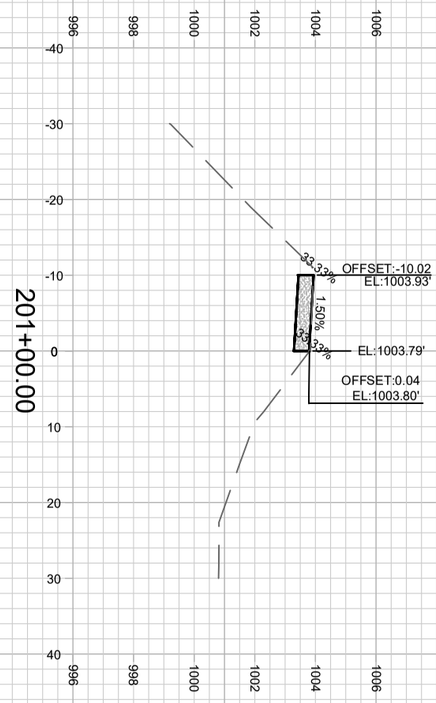

NOT FOR CONSTRUCTION

X-7

13925

MAINTENANCE PATH EAST CROSS SECTIONS 13925

NAUTILUS POINT PARK WIDENED SIDEWALK MADISON, WI

M:\DESIGN\Projects\13925\CAD\Streets\13925EN-Street.dwg CONTRACT NO: 8717

MARK	REVISION	DATE	BY
--	--	--	--
--	--	--	--
--	--	--	--
--	--	--	--

Designed By: JN | Date: 7/1/2024 10:41 AM | Scale: 1 IN:20 FT

13925 X-7

SCC Code	SCC Description	Item Number	Description	Units	Quantity Total
40.01	Demolition, Clearing, Earthwork	204.0155	Removing Concrete Sidewalk	SY	166
40.01	Demolition, Clearing, Earthwork	205.0100	Excavation Common	CY	144
40.01	Demolition, Clearing, Earthwork	208.0100	Borrow	CY	250
40.06	Pedestrian / bike access and accommodation, landscaping	305.0120	Base Aggregate Dense 1 1/4-Inch	TON	177
40.06	Pedestrian / bike access and accommodation, landscaping	460.5223	HMA Pavement 3" 4 LT 58-28 S	TON	64
40.07	Automobile, bus, van accessways including roads, parking lot	601.0411	Concrete Curb & Gutter 30-Inch Type D	LF	81
40.06	Pedestrian / bike access and accommodation, landscaping	602.0410	Concrete Sidewalk 5-Inch	SF	130
40.06	Pedestrian / bike access and accommodation, landscaping	602.0420	Concrete Sidewalk 7-Inch	SF	0
40.06	Pedestrian / bike access and accommodation, landscaping	602.0515	Curb Ramp Detectable Warning Field Natural Patina	SF	0
40.08	Temporary Facilities and other indirect costs during constructi	619.1000	Mobilization	EACH	1
40.06	Pedestrian / bike access and accommodation, landscaping	625.0500	Salvaged Topsoil	SY	1312
40.08	Temporary Facilities and other indirect costs during constructi	628.1905	Mobilizations Erosion Control	EACH	1
40.08	Temporary Facilities and other indirect costs during constructi	628.1910	Mobilizations Emergency Erosion Control	EACH	2
40.06	Pedestrian / bike access and accommodation, landscaping	628.6505	Soil Stabilizer Type A	ACRE	0.19
40.02	Site Utilities, Utility Relocation	628.7020	Inlet Protection Type D	EACH	4
40.08	Temporary Facilities and other indirect costs during constructi	628.756	Tracking Pad	EACH	1
40.06	Pedestrian / bike access and accommodation, landscaping	629.0210	Fertilizer Type B	CWT	0.060
40.06	Pedestrian / bike access and accommodation, landscaping	630.0500	Seed Water	MGAL	10
40.08	Temporary Facilities and other indirect costs during constructi	650.5500	Construction Staking Curb Gutter and Curb & Gutter	LF	81
40.06	Pedestrian / bike access and accommodation, landscaping	650.9000	Construction Staking Curb Ramps	EACH	30
40.06	Pedestrian / bike access and accommodation, landscaping	SPV.0060.501	Tree Protection	EACH	8
40.06	Pedestrian / bike access and accommodation, landscaping	SPV.0085.501	Seeding	LB	4
40.07	Automobile, bus, van accessways including roads, parking lot	SPV.0090.022	Remove, Salvage and Reinstall Fence	LF	17
40.06	Pedestrian / bike access and accommodation, landscaping	SPV.0090.114	Pavement Marking Epoxy Lane Line 4-Inch	LF	371
40.02	Site Utilities, Utility Relocation	SPV.0090.2008	Silt sock (8 Inch) -Complete	LF	747
40.06	Pedestrian / bike access and accommodation, landscaping	SPV.0180.2009	EROSION MATTING, CLASS I, TYPE A - ORGANIC	SY	972
40.06	Pedestrian / bike access and accommodation, landscaping	SPV.0180.2010	Aggressive Native Seed Mix	SY	892

MARK | REVISION | DATE | BY
Designed By: ### | Date: 7/1/2024 10:41 AM | Scale: 1 IN:40 FT
13925
MISCELLANEOUS QUANTITES
NAUTILUS POINT PARK WIDENED SIDEWALK
MADISON, WI
CONTRACT NO: 8717
M:\DESIGN\Projects\13925\CAD\Streets\13925EN-Street.dwg
13925
MQ-1