

SITE LOCATION MAP

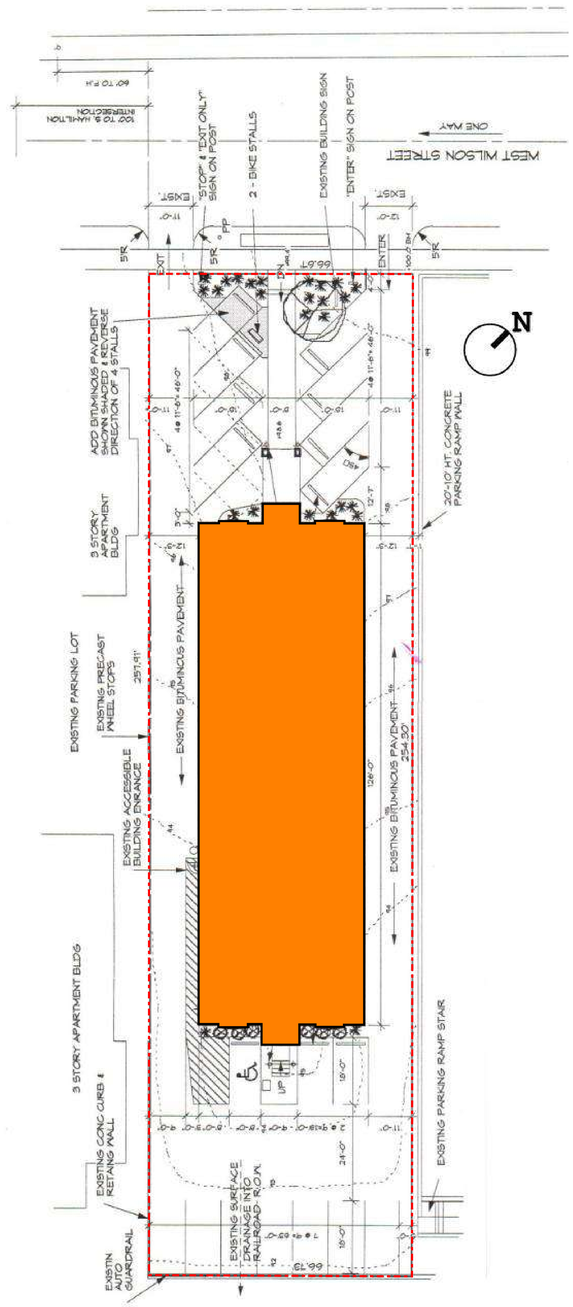

EXISITNG BUILDING ON SITE

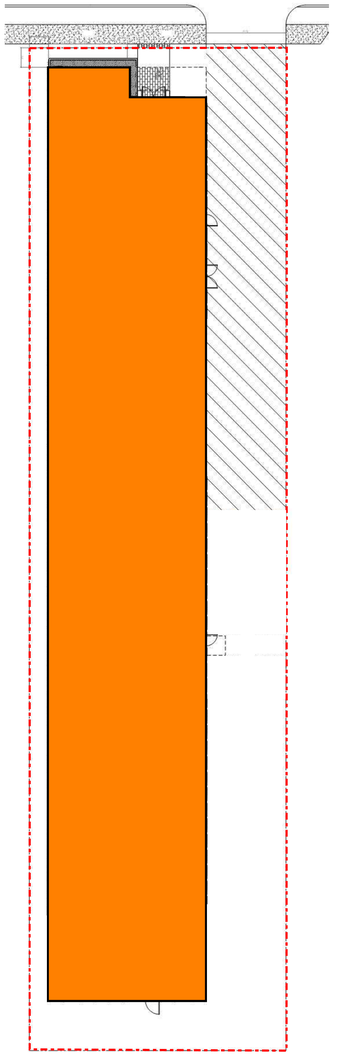

PROPOSED BUILDING ON SITE

SEA Design

N3302 South Oakland Road
Town of Oakland, Wiconsin
53538

progression

139 West Wilson
Madison, Wisconsin

Location Map

Revisions:	
UDC	12/11/2023
P.C.	12/11/2023

Project #: 21.000
Issued For: UDC/P.C.
Date: 12/11/2023

A001



view down NE down Wilson east of Hamilton/Henry intersection

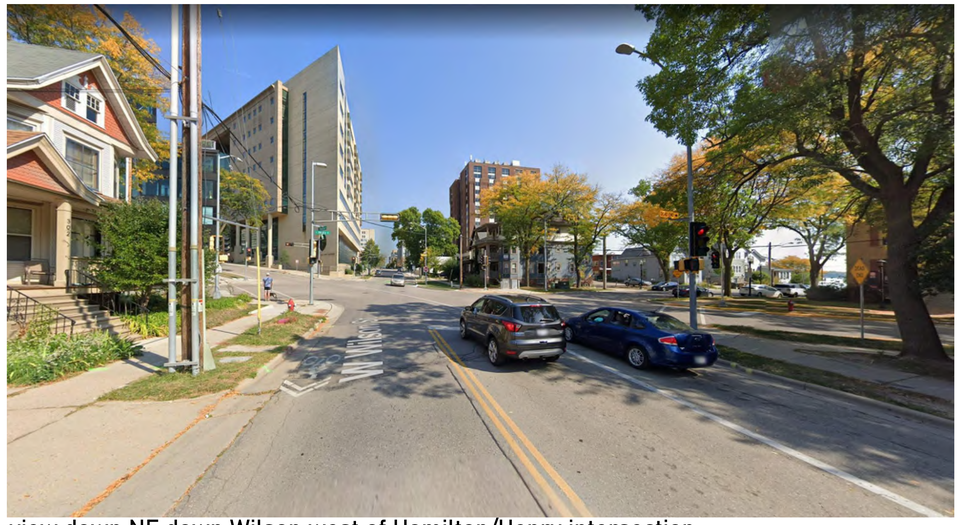

view down NE down Wilson west of Hamilton/Henry intersection



view down S onto Wilson at intersection of Wilson and Hamilton



view SE down West Wilson just east of S. Carroll



view looking NE onto intersection of Wilson and Hamilton



view S down West Wilson between Hamilton and S. Carroll

SEA Design
N2302 South Oakland Road
Town of Oakland, Wisconsin
53538

progression

139 West Wilson
Madison, Wisconsin

Context Photos

Revisions:	
UDC	12/11/2023
P.C.	12/11/2023

Project #:	21.000
Issued For:	Review
Date:	12/11/2023

A100



FRONT AND WEST SIDE

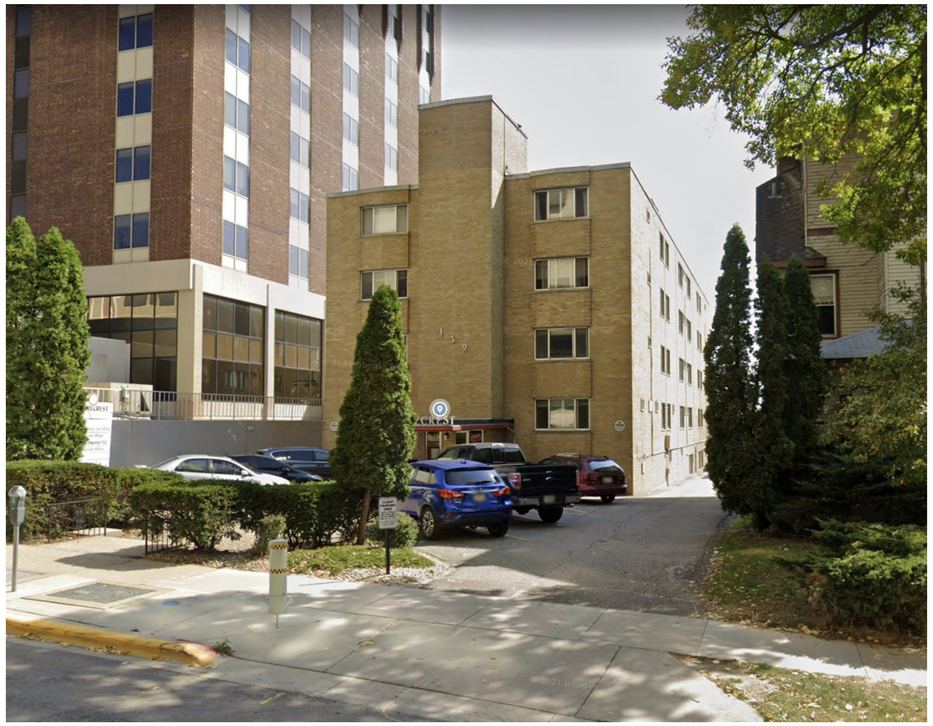

FRONT AND EAST SIDE



REAR FACADE FROM LAKESIDE IN CONTEXT



FRONT FACADE 139 WEST WILSON (The Shorecrest)



REAR FACADE

SEA Design
N3302 South Oakland Road
Town of Oakland, Wiconsin
53538

progression

139 West Wilson
Madison, Wisconsin

Existing Building Photos

Revisions:	
UDC	12/11/2023
P.C.	12/11/2023

Project #: 21.000
Issued For: Review
Date: 12/11/2023

A100.1

Exisitng interior photographs shown here are typcial of 139 West Wilson Street





















SEA Design

N3302 South Oakland Road
Town of Oakland, Wiconsin
53538

progression

139 West Wilson
Madison, Wisconsin

Existing Building - Interior Photos

Revisions:	
UDC	12/11/2023
P.C.	12/11/2023

Project #:	21.000
Issued For:	Review
Date:	12/11/2023

A100.2

EXISTING CONDITIONS SURVEY

PART OF LOT 3, BLOCK 70, ORIGINAL PLAT OF MADISON, RECORDED IN VOLUME A OF PLATS, PAGE 3, AS DOCUMENT No. 102, DANE COUNTY REGISTRY, LOCATED IN THE SOUTHWEST QUARTER OF THE NORTHWEST QUARTER OF SECTION 24, TOWNSHIP 07 NORTH, RANGE 09 EAST, CITY OF MADISON, DANE COUNTY, WISCONSIN.

SECTION CORNER MONUMENTS				
LETTER	CORNER	FOUND	NORTHING	EASTING
A	NW 24–07–09	THE CAPITOL BLDG	482,833.37	821,166.41
B	WITNESS CORNER	BRASS CAP	482,330.90	821,158.49
C	WITNESS CORNER	BRASS CAP	480,715.18	821,133.10
D	W 1/4 24–07–09	IN THE LAKE	480,193.39	821,124.90

SECTION LINE BEARINGS	
LETTER	BEARING AND DISTANCE
A–B	S00°54'23"W 502.53'
B–C	S00°53'57"W 1,615.92'
C–D	S00°54'03"W 521.85'
A–D	S00°54'03"W 2,640.31'

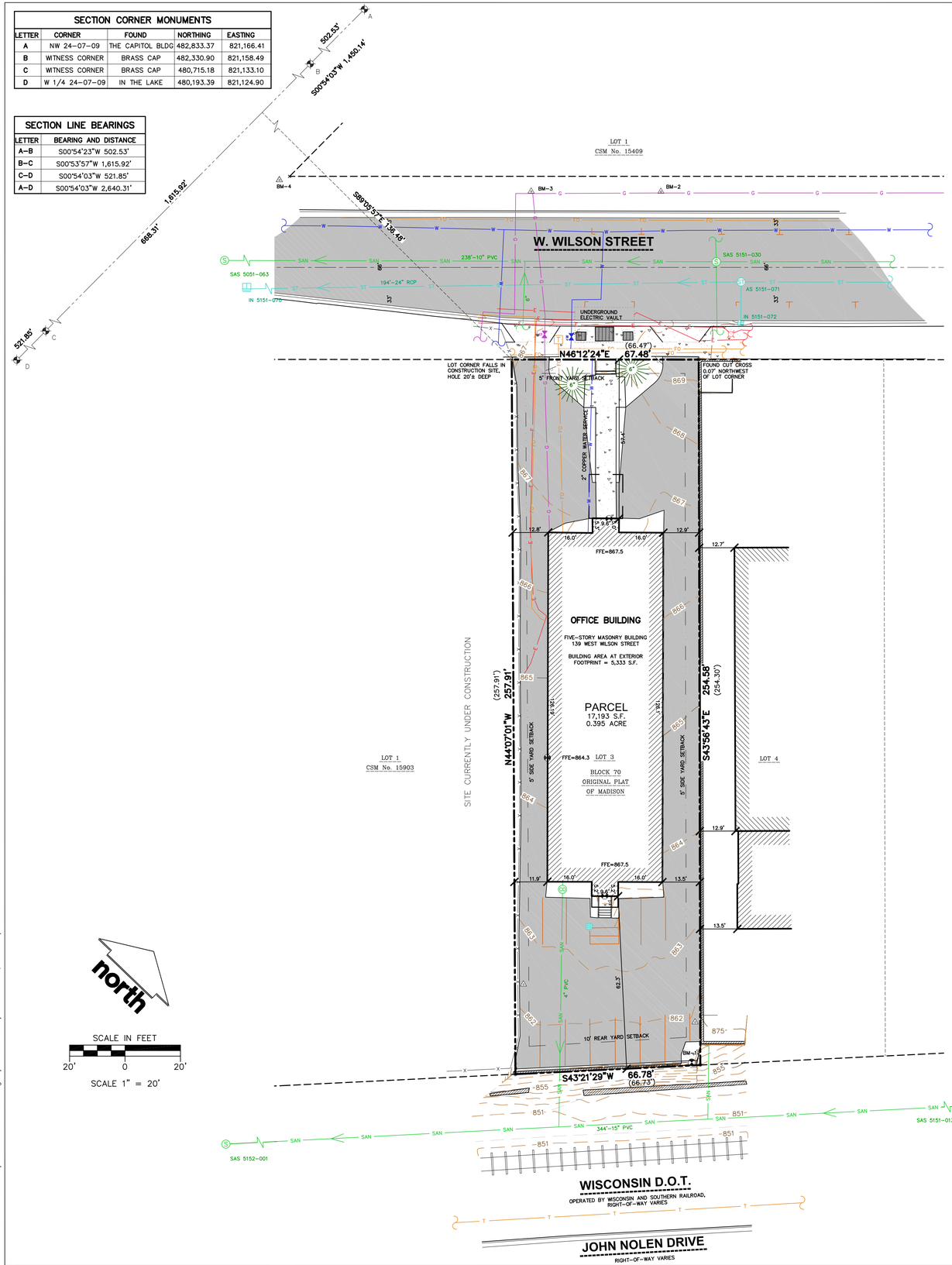

north

SCALE IN FEET

20' 0 20'

SCALE 1" = 20'

LEGEND

- GOVERNMENT CORNER
- 1" IRON PIPE FOUND
- CHISELED 'X' FOUND
- 3/4" REBAR FOUND
- CONTROL POINT
- BENCHMARK
- FINISHED FLOOR SHOT LOCATION
- SIGN
- SANITARY MANHOLE
- CLEAN OUT
- HYDRANT
- WATER VALVE
- STORM MANHOLE
- SQUARE CASTED INLET
- CURB INLET
- GAS VALVE
- LIGHT POLE
- TELEPHONE PEDESTAL
- CONIFEROUS TREE
- PARCEL BOUNDARY
- SECTION LINE
- RIGHT–OF–WAY LINE
- CENTERLINE
- PLATTED LOT LINE
- SETBACK LINE
- FENCE LINE
- CONCRETE CURB & GUTTER
- SANITARY SEWER
- WATER LINE
- STORM SEWER
- NATURAL GAS
- UNDERGROUND ELECTRIC
- FIBER OPTIC
- UNDERGROUND TELEPHONE
- BUILDING
- INDEX CONTOUR
- INTERMEDIATE CONTOUR
- BITUMINOUS PAVEMENT
- CONCRETE PAVEMENT
- PAVEMENT STRIPING
- END OF FLAGGED UTILITIES
- ( ) DENOTES RECORD DATA DEPICTING THE SAME LINE ON THE GROUND AS RETRACED BY THIS SURVEY

NOTES

1. FIELD WORK PERFORMED ON JUNE 08, 2022.
2. BEARINGS FOR THIS SURVEY AND MAP ARE REFERENCED TO THE WISCONSIN COUNTY COORDINATE SYSTEM, DANE COUNTY. THE WEST LINE OF THE NORTHWEST QUARTER OF SECTION 24–07–09, RECORDED AS S00°54'01"W.
3. ELEVATIONS ARE BASED ON THE NORTH AMERICAN VERTICAL DATUM OF 1988 (NAVD88). BENCHMARK IS A BRASS CAP IN CONCRETE MONUMENT FOR THE WITNESS CORNER TO THE WEST QUARTER CORNER OF SECTION 24–07–09, ELEVATION = 850.32'
4. CONTOUR INTERVAL IS ONE FOOT.
5. SUBSURFACE UTILITIES AND FEATURES SHOWN ON THIS MAP HAVE BEEN APPROXIMATED BY LOCATING SURFICIAL FEATURES AND APPURTENANCES, LOCATING DIGGERS HOTLINE FIELD MARKINGS AND BY REFERENCE TO UTILITY RECORDS AND MAPS. DIGGER'S HOTLINE TICKET NO. 20222305367, WITH A START DATE OF JUNE 03, 2022.
6. UTILITY COMPANIES CONTACTED THRU DIGGERS HOTLINE:
   - CITY OF MADISON ENGINEERING
   - MADISON GAS AND ELECTRIC COMPANY (ELECTRIC AND GAS)
   - CHARTER COMMUNICATIONS
   - AMERICAN TRANSMISSION COMPANY
   - LEVEL 3 IS NOW CENTURYLINK
   - AT&T TRANSMISSION
   - AT&T DISTRIBUTION
   - TDS TELECOM
   - MCI
   - MADISON METROPOLITAN SEWERAGE DISTRICT
   - WINDSTREAM
   - WISCONSIN DEPARTMENT OF ADMISISTRATION–DIVISION OF ENTERPRISE TECHNOLOGY
7. BEFORE EXCAVATION, APPROPRIATE UTILITY COMPANIES SHOULD BE CONTACTED. FOR EXACT LOCATION OF UNDERGROUND UTILITIES, CONTACT DIGGERS HOTLINE, AT 1.800.242.8511.
8. JSD PROFESSIONAL SERVICES, INC. DOES NOT GUARANTEE THAT BENCHMARKS LISTED ON THIS MAP HAVE NOT BEEN DISTURBED SINCE THE DATE OF THIS SURVEY AND SHALL BE VERIFIED BEFORE BEING UTILIZED.
9. THIS PARCEL IS ZONED URBAN MIXED–USE DISTRICT (UMX) PER THE CITY OF MADISON ZONING MAP.
   - LOT AREA–3,000 SQUARE FEET
   - LOT WIDTH–30 FEET
   - MINIMUM FRONT YARD SETBACK–5 FEET
   - SIDE YARD SET BACK–5 FEET
   - REAR YARD SETBACK–10 FEET

   CHECK WITH CITY ZONING DEPARTMENT FOR HEIGHT RESTRICTIONS AND SETBACKS PER BUILDING USE.
10. ROADWAY UTILITY RECORD DRAWINGS WERE REQUESTED FROM THE CITY OF MADISON. THE UTILITIES SHOWN REPRESENT FIELD LOCATED UTILITIES IN COMBINATION WITH THE SUPPLIED CITY RECORDS.

LEGAL DESCRIPTION

PART OF LOT 3, BLOCK 70, ORIGINAL PLAT OF MADISON, RECORDED IN VOLUME A OF PLATS, ON PAGE 3, AS DOCUMENT No. 102, LOCATED IN THE SOUTHWEST QUARTER OF THE NORTHWEST QUARTER OF SECTION 24, TOWNSHIP 07 EAST, RANGE 09 NORTH, CITY OF MADISON, DANE COUNTY, WISCONSIN.

TAX KEY NO: 251/0709–242–0124–0

SURVEYOR'S CERTIFICATE

I, JOHN KREBS, WISCONSIN PROFESSIONAL LAND SURVEYOR NO. S–1878, HEREBY CERTIFY THAT UNDER THE DIRECTION OF SEA DESIGN THIS SURVEY AND MAP HAS BEEN PREPARED AND COMPLIES WITH WISCONSIN ADMINISTRATIVE CODE A–E7 AND IS CORRECT TO THE BEST OF MY KNOWLEDGE AND BELIEF IN ACCORDANCE WITH THE INFORMATION PROVIDED.

JOHN KREBS, S–1878
PROFESSIONAL LAND SURVEYOR

DATE

WISCONSIN JOHN KREBS S–1878 McFARLAND, WISCONSIN LAND SURVEYOR

STORM SEWER MANHOLES					
STRUCT. ID	RIM ELEVATION	INVERT	ELEVATION	PIPE SIZE	PIPE TYPE
AS 5151–071	870.68	NE	863.18	24"	RCP
		SE	866.92	12"	RCP
		SW	863.18	24"	RCP

STORM SEWER INLETS					
INLET ID	RIM ELEVATION	INVERT	ELEVATION	PIPE SIZE	PIPE TYPE
INL 5151–072	869.99	NW	867.09	12"	RCP
INL 5151–070	863.44	NE	855.15	24"	RCP
		SW	855.15	24"	RCP

BENCHMARKS		
BENCH MARK	ELEVATION	DESCRIPTION
BM–1	862.06	CHISLED 'X' IN CONCRETE RETAINING WALL
BM–2	870.68	CHISLED 'X', NORTH SIDE OF W. WILSON STREET
BM–3	868.69	CHISLED 'X', NORTH SIDE OF W. WILSON STREET
BM–4	865.89	CHISLED 'X', NORTH SIDE OF W. WILSON STREET

*JSD DOES NOT GUARANTEE THAT THE BENCHMARK ELEVATIONS LISTED ON THIS MAP HAVE NOT BEEN DISTURBED SINCE THE DATE OF THIS SURVEY AND SHOULD BE VERIFIED PRIOR TO CONSTRUCTION ACTIVITIES.

SANITARY SEWER MANHOLES					
STRUCT. ID	RIM ELEVATION	INVERT	ELEVATION	PIPE SIZE	PIPE TYPE
SAS 5151–013	850.76	NE	845.14	15"	PVC
		SW	845.12	15"	PVC
SAS 5152–022	851.47	NE	844.74	15"	PVC
		NW	846.44	12"	PVC
		SW	844.71	15"	PVC
SAS 5151–030	870.66	NE	860.06	10"	PVC
		SE	861.01	8"	PVC
		NW	860.86	8"	PVC
		SW	860.01	10"	PVC
SAS 5051–063	862.65	NE	851.10	10"	PVC
		N	851.33	8"	PVC
		NE	856.92	8"	PVC
		NE	851.50	8"	PVC
		SE	851.00	12"	PVC

DIGGERS HOTLINE

JSD
CREATE THE VISION TELL THE STORY
jsdinc.com
MADISON REGIONAL OFFICE
161 HORIZON DRIVE, SUITE 101
VERONA, WISCONSIN 53593
P. 608.848.5060

CLIENT:
SEA DESIGN

CLIENT ADDRESS:
N3302 SOUTH OAKLAND
FORT ATKINSON, WI 53538

PROJECT:
139 W. WILSON STREET

PROJECT LOCATION:
139 W. WILSON STREET
CITY OF MADISON
DANE COUNTY, WISCONSIN

MODIFICATIONS:

#	Date:	Description:
1		
2		
3		
4		
5		
6		
7		
8		
9		
10		
11		
12		
13		
14		
15		

Prepared By:	JK 06/14/22
Reviewed By:	TJB 06/15/22
Approved By:	TJB 06/15/22

SHEET TITLE:
EXISTING CONDITIONS SURVEY

SHEET NUMBER:
1 OF 1

PROJECT NO: 22-11487

THESE PLANS AND DESIGNS ARE COPYRIGHT PROTECTED AND MAY NOT BE USED IN WHOLE OR IN PART WITHOUT THE WRITTEN CONSENT OF JSD PROFESSIONAL SERVICES, INC.

File: I:\2022\22\11487\DWG\Survey Sheet\22-11487 Existing.dwg Layout: 24x36 User: jk Plotted: Jun 15, 2022 - 2:51pm Xref's:

GENERAL NOTES

1. REFER TO THE EXISTING CONDITIONS SURVEY FOR EXISTING CONDITIONS NOTES AND LEGENDS.
2. ALL WORK IN THE ROW AND/OR PUBLIC EASEMENTS SHALL BE IN ACCORDANCE WITH THE STANDARD SPECIFICATIONS FOR SEWER & WATER CONSTRUCTION IN WISCONSIN AND MUNICIPAL REQUIREMENTS.
3. EXISTING GRADE SPOT ELEVATIONS SHOWN FOR INFORMATIONAL PURPOSES. DURING CONSTRUCTION MATCH EXISTING GRADES AT CONSTRUCTION LIMITS.
4. NO SITE GRADING OUTSIDE OR DOWNSLOPE OF PROPOSED SILT FENCE LOCATION. NO LAND DISTURBANCE BEYOND PROPERTY LINES.
5. JSD SHALL BE HELD HARMLESS AND DOES NOT WARRANT ANY DEVIATIONS BY THE OWNER/CONTRACTOR FROM THE APPROVED CONSTRUCTION PLANS THAT MAY RESULT IN DISCIPLINARY ACTIONS BY ANY OR ALL REGULATORY AGENCIES.

DEMOLITION NOTES

1. THIS PLAN INDICATES ITEMS ON THE PROPERTY INTENDED FOR DEMOLITION BASED ON THE CURRENT SITE DESIGN THAT HAVE BEEN IDENTIFIED BY A REASONABLE OBSERVATION OF THE EXISTING CONDITIONS THROUGH FIELD SURVEY RECONNAISSANCE, "DIGGER'S HOTLINE" LOCATION, AND GENERAL "STANDARD OF CARE". THERE MAY BE ADDITIONAL ITEMS THAT CAN NOT BE IDENTIFIED BY A REASONABLE ABOVE GROUND OBSERVATION, OF WHICH THE ENGINEER WOULD HAVE NO KNOWLEDGE OR MAY BE A PART OF ANOTHER DESIGN DISCIPLINE. IT IS THE CONTRACTOR'S/BIDDER'S RESPONSIBILITY TO REVIEW THE PLANS, PROPERTY AND VISIT AND PROVIDE THEIR OWN DUE DILIGENCE TO INCLUDE IN THEIR BID WHAT ADDITIONAL ITEMS, IN THEIR OPINION, MAY BE NECESSARY FOR DEMOLITION. ANY ADDITIONAL ITEMS IDENTIFIED BY THE CONTRACTOR/BIDDER SHALL BE IDENTIFIED IN THE BID AND REPORTED TO THE ENGINEER OF RECORD. JSD TAKES NO RESPONSIBILITY FOR ITEMS ON THE PROPERTY THAT COULD NOT BE LOCATED BY A REASONABLE OBSERVATION OF THE PROPERTY OR OF WHICH THEY WOULD HAVE NO KNOWLEDGE.
2. CONTRACTOR SHALL KEEP ALL STREETS AND PRIVATE DRIVES FREE AND CLEAR OF ALL CONSTRUCTION RELATED DIRT, DUST AND DEBRIS.
3. ALL TREES WITHIN THE CONSTRUCTION LIMITS SHALL BE REMOVED UNLESS SPECIFICALLY CALLED OUT FOR PROTECTION. ALL TREES TO BE REMOVED SHALL BE REMOVED IN THEIR ENTIRETY AND STUMPS SHALL BE GROUND TO PROPOSED SUBGRADE.
4. ALL LIGHT POLES TO BE REMOVED SHALL BE REMOVED IN THEIR ENTIRETY, INCLUDING BASE AND ALL APPURTENANCES. SALVAGE FOR RELOCATION, DISPOSAL BY CONTRACTOR AND/OR ABANDONMENT OF ALL ELECTRIC LINES WITH ELECTRICAL ENGINEER AND OWNER PRIOR TO DEMOLITION.
5. ABANDONED/REMOVED ITEMS SHALL BE DISPOSED OF OFF SITE UNLESS OTHERWISE NOTED.
6. CONTRACTOR TO REPLACE ALL SIDEWALK AND CURB AND GUTTER ABUTTING THE PROPERTIES, WHICH IS DAMAGED BY THE CONSTRUCTION, OR ANY SIDEWALK AND CURB AND GUTTER THAT THE CITY ENGINEER DETERMINES NEEDS TO BE REPLACED BECAUSE IT IS NOT AT A DESIRABLE GRADE REGARDLESS OF WHETHER THE CONDITION EXISTED PRIOR TO BEGINNING CONSTRUCTION.
7. PRIOR TO CONSTRUCTION, THE CONTRACTOR IS RESPONSIBLE FOR:
   - 7.1. EXAMINE ALL SITE CONDITIONS RELATIVE TO THE CONDITIONS INDICATED ON THE ENGINEERING DRAWINGS. ANY DISCREPANCIES ARE TO BE REPORTED IMMEDIATELY TO THE ENGINEER AND RESOLVED PRIOR TO THE START OF CONSTRUCTION.
   - 7.2. VERIFYING UTILITY ELEVATIONS AND NOTIFYING ENGINEER OF ANY DISCREPANCIES. NO WORK SHALL BE PERFORMED UNTIL THE DISCREPANCIES ARE RESOLVED.
   - 7.3. NOTIFYING ALL UTILITIES PRIOR TO THE REMOVAL OF ANY UNDERGROUND UTILITIES.
   - 7.4. NOTIFYING THE DESIGN ENGINEER AND LOCAL CONTROLLING MUNICIPALITY 48 HOURS PRIOR TO THE START OF CONSTRUCTION TO ARRANGE FOR APPROPRIATE CONSTRUCTION INSPECTION.
8. ANY SANITARY SEWER, SANITARY SEWER SERVICES, WATER MAIN, WATER SERVICES, STORM SEWER, OR OTHER UTILITIES, WHICH ARE DAMAGED BY THE CONTRACTORS, SHALL BE REPAIRED TO THE OWNER'S SATISFACTION AT THE CONTRACTOR'S EXPENSE.
9. CONTRACTOR IS RESPONSIBLE FOR SITE SAFETY DURING THE CONSTRUCTION OF THESE IMPROVEMENTS.
10. CONTRACTOR TO COORDINATE PRIVATE UTILITY REMOVAL / ABANDONMENT AND NECESSARY RELOCATION WITH RESPECTIVE UTILITY COMPANY. COORDINATION REQUIRED PRIOR TO CONSTRUCTION.
11. ALL DEMOLITION SHALL BE IN ACCORDANCE WITH THE APPROVED MUNICIPALITY RECYCLING PLAN.
12. ANY CONTAMINATED SOILS SHALL BE REMOVED IN ACCORDANCE WITH FEDERAL AND STATE REGULATIONS TO AN APPROVED LANDFILL.
13. ALL EXISTING UTILITIES TO BE FIELD LOCATED AND FLAGGED BY CONTRACTOR.
14. EXISTING FIBER OPTIC LINE TO BE CLEARLY MARKED PRIOR TO ANY EXCAVATION. CONTRACTOR TO NOTIFY ENGINEER IMMEDIATELY IF ANY DISCREPANCIES OCCUR IN THE LOCATION SHOWN OR PROPOSED IMPROVEMENTS IMPACTING EXISTING FIBER OPTIC LINE LOCATION.
15. SEWER ABANDONMENT SHALL BE IN ACCORDANCE WITH SECTION 3.2.24, OF THE STANDARD SPECIFICATIONS FOR WATER AND SEWER CONSTRUCTION IN WISCONSIN, LATEST ADDITION, AND CITY OF MADISON SPECIFICATIONS.
16. WATER ABANDONMENT SHALL BE IN ACCORDANCE WITH SECTION 4.14.0 OF THE STANDARD SPECIFICATIONS FOR WATER AND SEWER CONSTRUCTION IN WISCONSIN, LATEST ADDITION, AND CITY OF MADISON SPECIFICATIONS.
17. ALL PERIMETER EROSION CONTROL DEVICES SHALL BE INSTALLED PRIOR TO THE START OF DEMOLITION ACTIVITIES. CONTRACTOR SHALL KEEP ALL STREETS AND PAVEMENT FREE AND CLEAR OF ALL CONSTRUCTION RELATED DIRT, DUST AND DEBRIS.
18. BUILDING REMOVALS SHALL BE BY A QUALIFIED CONTRACTOR. CONTRACTOR TO FOLLOW ALL DEMOLITION REGULATIONS, DISCONNECT ALL UTILITIES, OBTAIN ALL APPLICABLE PERMITS AND DISPOSE OF ALL BUILDING MATERIALS IN APPROPRIATE LANDFILLS. DEMOLISHED MATERIALS SHALL NOT BE BURIED ON SITE. IF ENCOUNTERED, ANY CONTAMINATED SOILS SHALL BE REMOVED TO A LANDFILL IN ACCORDANCE WITH APPROPRIATE STATE AND FEDERAL REGULATIONS.
19. CONTRACTOR TO REMOVE EXISTING UTILITY PIPE OR PROVIDE PIPE BACK-FILLING AFTER REMOVAL OF EXISTING UTILITIES WITHIN BUILDING FOOTPRINT USING "LOW DENSITY CONCRETE/FLOWABLE FILL".
20. RESTORATION OF THE EXISTING ROADWAY RIGHT-OF-WAYS ARE CONSIDERED INCIDENTAL AND SHOULD BE PART OF THE COST OF THE UNDERGROUND IMPROVEMENTS, DEMOLITION AND REMOVAL. THIS INCLUDES CURB & GUTTER, SIDEWALK, TOPSOIL, SEEDING AND MULCHING.
21. SECTION 28.185(9) REQUIRES THAT EVERY APPLICANT FOR A DEMOLITION OR REMOVAL APPROVAL THAT REQUIRES APPROVAL BY THE PLAN COMMISSION IS REQUIRED TO GET A REUSE AND RECYCLING PLAN APPROVED BY THE CITY RECYCLING COORDINATOR, BRYAN JOHNSON AT STREETS@CITYOFMADISON.COM PRIOR TO RECEIVING A RAZE PERMIT. EVERY PERSON WHO IS REQUIRED TO SUBMIT A REUSE AND RECYCLING PLAN PURSUANT TO SECTION 28.185(9) SHALL SUBMIT DOCUMENTS SHOWING COMPLIANCE WITH THE PLAN WITHIN SIXTY (60) DAYS OF COMPLETION OF DEMOLITION. A DEMOLITION OR REMOVAL PERMIT IS VALID FOR ONE (1) YEAR FROM THE DATE OF THE PLAN COMMISSION.

CONSTRUCTION SEQUENCING

1. INSTALL PERIMETER SILT FENCE, INLET PROTECTION AND TEMPORARY CONSTRUCTION ENTRANCE.
2. STRIP AND STOCKPILE TOPSOIL, INSTALL SILT FENCE AROUND PERIMETER OF STOCKPILE.
3. CONDUCT ROUGH GRADING EFFORTS AND INSTALL CHECK DAMS WITHIN DRAINAGE DITCHES AS NEEDED.
4. INSTALL UTILITY PIPING AND STRUCTURES, IMMEDIATELY INSTALL INLET PROTECTION.
5. COMPLETE FINAL GRADING, INSTALLATION OF GRAVEL BASE COURSES, PLACEMENT OF CURBS, PAVEMENTS, WALKS, ETC.
6. PLACE TOPSOIL AND IMMEDIATELY STABILIZE DISTURBED AREAS WITH EROSION CONTROL MEASURES AS INDICATED ON PLANS.
7. EROSION CONTROLS SHALL NOT BE REMOVED UNTIL SITE IS FULLY STABILIZED OR 70% VEGETATIVE COVER IS ESTABLISHED.

CONTRACTOR MAY MODIFY SEQUENCING AFTER ITEM NO. 1 AS NEEDED TO COMPLETE CONSTRUCTION IF EROSION CONTROLS ARE MAINTAINED IN ACCORDANCE WITH THE CONSTRUCTION SITE EROSION CONTROL REQUIREMENTS.

PAVING NOTES

1. GENERAL
   - 1.1. ALL PAVING SHALL CONFORM TO "STATE OF WISCONSIN STANDARD SPECIFICATIONS FOR HIGHWAY & STRUCTURE CONSTRUCTION, LATEST EDITION, APPLICABLE CITY OF MADISON ORDINANCES AND THE GEOTECHNICAL REPORT PREPARED BY GEOTEST DATED MARCH 25, 2022.
   - 1.2. ALL PAVING DIMENSIONS ARE TO FACE OF CURB UNLESS SPECIFIED OTHERWISE.
   - 1.3. SURFACE PREPARATION – NOTIFY ENGINEER/OWNER OF UNSATISFACTORY CONDITIONS. DO NOT BEGIN PAVING WORK UNTIL DEFICIENT SUBBASE AREAS HAVE BEEN CORRECTED AND ARE READY TO RECEIVE PAVING.
   - 1.4. ANY REQUIRED REPLACEMENT OF PUBLIC CURB AND GUTTER SHALL MATCH EXISTING AND MEET MUNICIPALITY REQUIREMENTS.
2. ASPHALTIC CONCRETE PAVING SPECIFICATIONS
   - 2.1. CODES AND STANDARDS – THE PLACING, CONSTRUCTION AND COMPOSITION OF THE ASPHALTIC BASE COURSE AND ASPHALTIC CONCRETE SURFACE COURSE SHALL BE IN ACCORDANCE WITH THE REQUIREMENTS OF SECTIONS 450, 455, 460 AND 465 OF THE STATE OF WISCONSIN STANDARD SPECIFICATIONS FOR HIGHWAY AND STRUCTURE CONSTRUCTION, CURRENT EDITION, HEREAFTER, THIS PUBLICATION WILL BE REFERRED TO AS STATE HIGHWAY SPECIFICATIONS.
   - 2.2. WEATHER LIMITATIONS – APPLY TACK COATS WHEN AMBIENT TEMPERATURE IS ABOVE 50° F (10° C) AND WHEN TEMPERATURE HAS NOT BEEN BELOW 35° F (1° C) FOR 12 HOURS IMMEDIATELY PRIOR TO APPLICATION. DO NOT APPLY WHEN BASE IS WET OR CONTAINS EXCESS OF MOISTURE. CONSTRUCT ASPHALTIC CONCRETE SURFACE COURSE WHEN TEMPERATURE IS ABOVE 40° F (4° C) AND WHEN BASE IS DRY AND WHEN WEATHER IS NOT RAINY. BASE COURSE MAY BE PLACED WHEN AIR TEMPERATURE IS ABOVE 30° F (–1° C).
   - 2.3. GRADE CONTROL – ESTABLISH AND MAINTAIN REQUIRED LINES AND ELEVATIONS FOR EACH COURSE DURING CONSTRUCTION.
   - 2.4. CRUSHED AGGREGATE BASE COURSE – THE TOP LAYER OF BASE COURSE SHALL CONFORM TO SECTIONS 301 AND 305, STATE HIGHWAY SPECIFICATIONS.
   - 2.5. BINDER COURSE AGGREGATE – THE AGGREGATE FOR THE BINDER COURSE SHALL CONFORM TO SECTIONS 460 AND 315, STATE HIGHWAY SPECIFICATIONS.
   - 2.6. SURFACE COURSE AGGREGATE – THE AGGREGATE FOR THE SURFACE COURSE SHALL CONFORM TO SECTIONS 460 AND 465, STATE HIGHWAY SPECIFICATIONS.
   - 2.7. ASPHALTIC MATERIALS – THE ASPHALTIC MATERIALS SHALL CONFORM TO SECTION 455 AND 460, STATE HIGHWAY SPECIFICATIONS.
3. CONCRETE PAVING SPECIFICATIONS
   - 3.1. CONCRETE PAVING SHALL BE IN ACCORDANCE WITH THE REQUIREMENTS OF SECTIONS 415 AND 416 OF THE STATE HIGHWAY SPECIFICATIONS.
   - 3.2. CURING COMPOUNDS SHALL CONFORM TO SECTION 415 OF THE STATE HIGHWAY SPECIFICATIONS.
   - 3.3. CONTRACTOR SHALL PROVIDE CONTROL JOINTS AND CONSTRUCTION JOINTS OF ONE-QUARTER CONCRETE THICKNESS AT AN EQUAL RATIO OF LENGTH TO WIDTH WHEREVER POSSIBLE WITH A MAXIMUM LENGTH BETWEEN JOINTS OF 8' ON CENTER.
   - 3.4. CONTRACTOR SHALL PROVIDE EXPANSION JOINTS IN SIDEWALKS AT A MAXIMUM 24' ON CENTER.
   - 3.5. EXTERIOR CONCRETE SURFACES SHALL BE BROOM FINISHED.
   - 3.6. ALL CONCRETE SURFACES TO BE SEALED WITH TYPE TK-26UV CONCRETE SEALANT.
4. PAVEMENT MARKING SPECIFICATIONS
   - 4.1. USE 4" WIDE, HIGH VISIBILITY YELLOW LATEX PAINT FOR STALL LINES.
   - 4.2. MARK AND STRIPE ADA PARKING SPACES APPROPRIATELY.
   - 4.3. ALL PAVEMENT MARKINGS INCLUDING: STOP BARS, CROSSWALKS, DIRECTIONAL ARROWS, PARKING STALL LINES, ADA STALL MARKINGS, NO PARKING ZONES, DROP-OFF/PICK-UP ZONES SHALL BE PAINTED WITH LATEX PAINT PER SPECIFICATIONS.
   - 4.4. 2' x 4' TRUNCATED DOME WARNING DETECTION FIELD SHALL BE PLACED AT ALL ADA RAMPS.

GRADING AND SEEDING NOTES

1. ALL PROPOSED GRADES SHOWN ARE FINISHED GRADES. CONTRACTOR SHALL VERIFY ALL GRADES, MAKE SURE ALL AREAS DRAIN PROPERLY AND SHALL REPORT ANY DISCREPANCIES TO THE ENGINEER PRIOR TO CONSTRUCTION.
2. CONTRACTOR SHALL ASSUME SOLE RESPONSIBILITY FOR COMPUTATIONS OF ALL GRADING QUANTITIES. WHILE JSD PROFESSIONAL SERVICES, INC. ATTEMPTS TO PROVIDE A COST EFFECTIVE APPROACH TO BALANCE EARTHWORK, GRADING DESIGN IS GOVERNED BY MANY FACTORS, INCLUDING SAFETY, AESTHETICS, AND COMMON ENGINEERING STANDARDS OF CARE. THEREFORE, NO GUARANTEE CAN BE MADE FOR A BALANCED SITE.
3. PARKING LOT AND DRIVEWAY ELEVATIONS ARE PAVEMENT GRADES, NOT TOP OF CURB GRADES, UNLESS OTHERWISE NOTED.
4. ANY WORK WITHIN RIGHT-OF-WAY SHALL BE PROPERLY PERMITTED AND COORDINATED WITH THE APPROPRIATE OFFICIALS PRIOR TO COMMENCEMENT OF ANY CONSTRUCTION ACTIVITIES. ALL GRADING WITHIN RIGHT-OF-WAY IS SUBJECT TO APPROVAL BY SAID OFFICIALS.
5. CONTRACTOR SHALL PROVIDE NOTICE TO THE MUNICIPALITY IN ADVANCE OF ANY SOIL DISTURBING ACTIVITIES, IN ACCORDANCE WITH MUNICIPAL REQUIREMENTS.
6. ALL DISTURBED AREAS SHALL BE SODDED AND/OR SEEDED AND MULCHED IMMEDIATELY FOLLOWING GRADING ACTIVITIES. SOD/SEED MIX TO BE IN ACCORDANCE WITH LANDSCAPE PLAN.
7. CONTRACTOR SHALL CHISEL-PLOW OR DEEP TILL WITH DOUBLE TINES ALL STORMWATER MANAGEMENT FACILITIES JUST PRIOR TO SODDING AND/OR SEEDING AND MULCHING TO PROMOTE INFILTRATION.
8. CONTRACTOR SHALL WATER ALL NEWLY SODDED/SEEDED AREAS DURING THE SUMMER MONTHS WHENEVER THERE IS A 7 DAY LAPSE WITH NO SIGNIFICANT RAINFALL.
9. CONTRACTOR TO DEEP TILL ALL COMPACTED PERVIOUS SURFACES PRIOR TO SODDING AND/OR SEEDING AND MULCHING.
10. ALL SLOPES 20% OR GREATER SHALL BE TEMPORARY SEEDED, MULCHED, OR OTHER MEANS OF COVER PLACED ON THEM WITHIN 2 WEEKS OF DISTURBANCE.
11. ALL EXPOSED SOIL AREAS THAT WILL NOT BE BROUGHT TO FINAL GRADE OR ON WHICH LAND DISTURBING ACTIVITIES WILL NOT BE PERFORMED FOR A PERIOD GREATER THAN 30 DAYS AND REQUIRE VEGETATIVE COVER FOR LESS THAN 1 YEAR, REQUIRE TEMPORARY SEEDING FOR EROSION CONTROL. SEEDING FOR EROSION CONTROL SHALL BE IN ACCORDANCE WITH WDNR TECHNICAL STANDARD 1059 AND CITY OF MADISON ORDINANCE.

UTILITY NOTES

1. ALL EXISTING UTILITIES ARE SHOWN FOR INFORMATIONAL PURPOSES ONLY AND ARE NOT GUARANTEED TO BE ACCURATE OR ALL INCLUSIVE. THE CONTRACTOR IS RESPONSIBLE FOR MAKING HIS OWN DETERMINATION AS TO THE TYPE AND LOCATIONS OF UNDERGROUND UTILITIES AS MAY BE NECESSARY TO AVOID DAMAGE THERETO. CONTRACTOR/OWNER SHALL CALL "DIGGER'S HOTLINE" PRIOR TO ANY CONSTRUCTION.

2. PRIOR TO CONSTRUCTION, THE PRIME CONTRACTOR IS RESPONSIBLE FOR:
EXAMINING ALL SITE CONDITIONS RELATIVE TO THE CONDITIONS INDICATED ON THE ENGINEERING DRAWINGS. ANY DISCREPANCIES ARE TO BE REPORTED TO THE ENGINEER AND RESOLVED PRIOR TO THE START OF CONSTRUCTION.
   - OBTAINING ALL PERMITS INCLUDING PERMIT COSTS, TAP FEES, METER DEPOSITS, BONDS, AND ALL OTHER FEES REQUIRED FOR PROPOSED WORK TO OBTAIN OCCUPANCY.
   - VERIFYING ALL ELEVATIONS, LOCATIONS AND SIZES OF SANITARY, WATER AND STORM LATERALS AND CHECK ALL UTILITY CROSSINGS FOR CONFLICTS. NOTIFY ENGINEER OF ANY DISCREPANCY. NO WORK SHALL BE PERFORMED UNTIL THE DISCREPANCY IS RESOLVED.
   - NOTIFYING ALL UTILITIES PRIOR TO INSTALLATION OF ANY UNDERGROUND IMPROVEMENTS.
   - NOTIFYING THE DESIGN ENGINEER AND MUNICIPALITY 48 HOURS PRIOR TO THE START OF CONSTRUCTION TO ARRANGE FOR APPROPRIATE CONSTRUCTION OBSERVATION.
   - COORDINATING ALL CONSTRUCTION WITH OTHER CONTRACTORS INVOLVED WITH CONSTRUCTION OF THE PROPOSED DEVELOPMENT AND FOR REPORTING ANY ERRORS OR DISCREPANCIES BETWEEN THESE PLANS AND PLANS PREPARED BY OTHERS.
3. ALL UTILITY WORK SHALL BE DONE IN ACCORDANCE WITH THE STANDARD SPECIFICATIONS FOR SEWER AND WATER CONSTRUCTION IN WISCONSIN AND LOCAL CODES AND ORDINANCES. IN ADDITION, IT IS THE CONTRACTORS RESPONSIBILITY TO DETERMINE WHICH SPECIFICATIONS AND CODES APPLY, AND TO COORDINATE ALL CONSTRUCTION ACTIVITIES WITH THE APPROPRIATE LOCAL AND STATE AUTHORITIES.
4. SPECIFICATIONS SHALL COMPLY WITH THE CITY OF MADISON SPECIAL PROVISIONS.
5. LENGTHS OF ALL UTILITIES ARE TO CENTER OF STRUCTURES OR FITTINGS AND MAY VARY SLIGHTLY FROM PLAN. LENGTHS SHALL BE VERIFIED IN THE FIELD DURING CONSTRUCTION.
6. CONTRACTOR IS RESPONSIBLE FOR SITE SAFETY DURING THE CONSTRUCTION OF IMPROVEMENTS.
7. CONTRACTOR SHALL INSTALL A PEDESTRIAN FENCE AROUND ALL EXCAVATIONS TO BE LEFT OPEN OVER NIGHT AS REQUIRED IN CONSTRUCTION SITES WHERE THE POTENTIAL FOR PEDESTRIAN INJURY EXISTS.
8. CONTRACTOR SHALL ADJUST AND/OR RECONSTRUCT ALL UTILITY COVERS (SUCH AS MANHOLE COVERS, VALVE BOX COVERS, ETC.) TO MATCH THE FINISHED GRADES OF THE AREAS EFFECTED BY THE CONSTRUCTION.
9. THE PRIME CONTRACTOR IS RESPONSIBLE FOR COORDINATING ALL CONSTRUCTION WITH OTHER CONTRACTORS INVOLVED WITH CONSTRUCTION OF THE PROPOSED DEVELOPMENT AND FOR REPORTING ANY ERRORS OR DISCREPANCIES BETWEEN THESE PLANS AND PLANS PREPARED BY OTHERS.
10. ANY SANITARY SEWER, SANITARY SEWER SERVICES, WATER MAIN, WATER SERVICES, STORM SEWER, OR OTHER UTILITIES, WHICH ARE DAMAGED BY THE CONTRACTORS, SHALL BE REPAIRED TO THE OWNER'S SATISFACTION AT THE CONTRACTOR'S EXPENSE.
11. THE CONTRACTOR IS RESPONSIBLE FOR PROVIDING THE ENGINEER WITH AS-BUILT CONDITIONS OF THE DESIGNATED IMPROVEMENTS IN ORDER THAT THE APPROPRIATE DRAWINGS CAN BE PREPARED, IF REQUIRED, FOR ANY CHANGES TO THE DRAWINGS OR ADDITIONAL ITEMS MUST BE REPORTED TO THE ENGINEER AS WORK PROGRESSES.
12. STORM SEWER SPECIFICATIONS –

    PIPE – REINFORCED CONCRETE PIPE (RCP) SHALL MEET THE REQUIREMENTS OF ASTM CLASS III (MINIMUM) C-76 WITH RUBBER GASKET JOINTS CONFORMING TO ASTM C-443. HIGH DENSITY DUAL-WALL POLYETHYLENE PIPE SHALL BE AS MANUFACTURED BY ADS OR EQUAL WITH WATER TIGHT JOINTS, AND SHALL MEET THE REQUIREMENTS OF AASHTO DESIGNATION M-294 TYPE "S".

    INLETS – INLETS SHALL BE CONSTRUCTED IN ACCORDANCE WITH FILE. NO. 28 OF THE "STANDARD SPECIFICATIONS", OR APPROVED EQUAL WITH A 1'-8" X 2'-6" MAXIMUM OPENING. CURB FRAME & GRATE SHALL BE NEENAH R-3067 WITH TYPE R GRATE, OR EQUAL.

    BACKFILL AND BEDDING – STORM SEWER SHALL BE CONSTRUCTED WITH GRAVEL BACKFILL AND CLASS "B" BEDDING IN ALL PAVED AREAS AND TO A POINT 5 FEET BEYOND THE EDGE OF PAVEMENT. TRENCHES RUNNING PARALLEL TO AND LESS THAN 5 FEET FROM THE EDGE OF PAVEMENT SHALL ALSO REQUIRE GRAVEL BACKFILL. LANDSCAPED AREAS MAY BE BACKFILLED WITH EXCAVATED MATERIAL IN CONFORMANCE WITH SECTION 8.43.5 OF THE "STANDARD SPECIFICATIONS".

    FIELD TILE CONNECTION – ALL FIELD TILE ENCOUNTERED DURING CONSTRUCTION SHALL BE INCLUDED IN THE UNIT PRICE(S) FOR STORM SEWER. TILE LINES CROSSED BY THE TRENCH SHALL BE REPLACED WITH THE SAME MATERIAL AS THE STORM SEWER.
13. WATER MAIN SPECIFICATIONS –

    PIPE – DUCTILE IRON PIPE SHALL BE CLASS 52 CONFORMING TO AWWA C151 AND CHAPTER 8.18.0 OF THE "STANDARD SPECIFICATIONS". POLYVINYL CHLORIDE (PVC) PIPE SHALL MEET THE REQUIREMENTS OF AWWA STANDARD C-900, CLASS 150, DR-18, WITH CAST IRON O.D. AND INTEGRAL ELASTOMERIC GASKETED JOINTS. NON-METALLIC WATER MAINS SHALL BE INSTALLED WITH BLUE INSULATION TRACER WIRE AND CONFORM WITH SPS 382.30(11)(h).

    VALVES AND VALVE BOXES – GATE VALVES SHALL BE AWWA GATE VALVES MEETING THE REQUIREMENTS OF AWWA C-500 AND CHAPTER 8.27.0 OF THE "STANDARD SPECIFICATIONS". GATE VALVES AND VALVE BOXES SHALL CONFORM TO LOCAL PLUMBING ORDINANCES.

    HYDRANTS – HYDRANTS SHALL CONFORM TO THE SPECIFICATIONS OF THE CITY OF MADISON. THE DISTANCE FROM THE GROUND LINE TO THE CENTERLINE OF THE LOWEST NOZZLE AND THE LOWEST CONNECTION OF THE FIRE DEPARTMENT SHALL BE NO LESS THAN 18-INCHES AND NO GREATER THAN 23-INCHES (SEE DETAIL).

    BEDDING AND COVER MATERIAL – PIPE BEDDING AND COVER MATERIAL SHALL BE SAND, CRUSHED STONE CHIPS OR CRUSHED STONE SCREENINGS CONFORMING TO CHAPTER 8.43.2 OF THE "STANDARD SPECIFICATIONS".

    BACKFILL – BACKFILL MATERIAL AND INSTALLATION SHALL BE IN ACCORDANCE WITH CHAPTER 2.6.0 OF THE "STANDARD SPECIFICATIONS". GRAVEL BACKFILL IS REQUIRED IN ALL PAVED AREAS AND TO A POINT 5 FEET BEYOND THE EDGE OF PAVEMENT. TRENCHES RUNNING PARALLEL TO AND LESS THAN 5 FEET FROM THE EDGE OF PAVEMENT SHALL ALSO REQUIRE GRAVEL BACKFILL. LANDSCAPED AREAS MAY BE BACKFILLED WITH EXCAVATED MATERIAL IN CONFORMANCE WITH SECTION 8.43.5 OF THE "STANDARD SPECIFICATIONS".
14. SANITARY SEWER SPECIFICATIONS –

    PIPE – SANITARY SEWER PIPE MATERIAL SHALL BE POLYVINYL CHLORIDE (PVC) MEETING REQUIREMENTS OF ASTM D 3034, SDR-35, WITH INTEGRAL BELL TYPE FLEXIBLE ELASTOMERIC JOINTS, MEETING THE REQUIREMENTS OF ASTM D-3212.

    BEDDING AND COVER MATERIAL – BEDDING AND COVER MATERIAL SHALL CONFORM TO THE APPROPRIATE SECTIONS OF THE "STANDARD SPECIFICATION" WITH THE FOLLOWING MODIFICATION: "COVER MATERIAL SHALL BE THE SAME AS USED FOR BEDDING AND SHALL CONFORM TO SECTION 8.43.2 (A). BEDDING AND COVER MATERIAL SHALL BE PLACED IN A MINIMUM OF THREE SEPARATE LIFTS, OR AS REQUIRED TO INSURE ADEQUATE COMPACTING OF THESE MATERIALS, WITH ONE LIFT OF BEDDING MATERIAL ENDING AT OR NEAR THE SPRINGLINE OF THE PIPE. THE CONTRACTOR SHALL TAKE CARE TO COMPLETELY WORK BEDDING MATERIAL UNDER THE HAUNCH OF THE PIPE TO PROVIDE ADEQUATE SIDE SUPPORT."

    BACKFILL – BACKFILL MATERIAL AND INSTALLATION SHALL BE IN ACCORDANCE CHAPTER 2.6.0 OF THE "STANDARD SPECIFICATIONS." GRAVEL BACKFILL IS REQUIRED IN ALL PAVED AREAS AND TO A POINT 5 FEET BEYOND THE EDGE OF PAVEMENT. TRENCHES RUNNING PARALLEL TO AND LESS THAN 5 FEET FROM THE EDGE OF PAVEMENT SHALL ALSO REQUIRE GRAVEL BACKFILL. LANDSCAPED AREAS MAY BE BACKFILLED WITH EXCAVATED MATERIAL IN CONFORMANCE WITH SECTION 8.43.5 OF THE "STANDARD SPECIFICATIONS."

    MANHOLES – MANHOLES SHALL BE CONSTRUCTED IN ACCORDANCE WITH FILE NOS. 12, 13 AND 15 OF THE "STANDARD SPECIFICATIONS" AND ALL SPECIAL PROVISIONS OF THE CITY OF MADISON.

    MANHOLE FRAMES AND COVERS – MANHOLE FRAMES AND COVERS SHALL BE NEENAH R-1642 WITH TYPE "B" SELF SEALING LIDS, NON-ROCKING OR EQUAL.
15. WATERMAIN AND SANITARY SEWER SHALL BE INSULATED WHEREVER THE DEPTH OF COVER IS LESS THAN 6 FEET. INSULATION AND INSTALLATION OF INSULATION SHALL BE CONFORMING WITH CHAPTER 4.17.0 "INSULATION" OF THE STANDARD SPECIFICATIONS FOR SEWER AND WATER CONSTRUCTION IN WISCONSIN 6TH EDITION UPDATED WITH ITS LATEST ADDENDUM (TYP.).
16. ALL NON-METALLIC UTILITY PIPES (SANITARY SEWER, STORM SEWER, AND WATER PIPING) SHALL BE INSTALLED IN CONJUNCTION WITH TRACER WIRE AS REQUIRED BY SPS 382.30(11)(h), SPS 382.36(7)(c)10., AND SPS 382.40(8)(k). COLOR OF TRACER WIRE SHALL BE: SANITARY SEWER – GREEN, STORM SEWER – BROWN, WATER – BLUE, NON-POTABLE WATER – PURPLE.

EROSION CONTROL NOTES

1. CONTRACTOR IS RESPONSIBLE TO NOTIFY ENGINEER OF RECORD AND OFFICIALS OF ANY CHANGES TO THE EROSION CONTROL AND STORMWATER MANAGEMENT PLANS. ENGINEER OF RECORD AND APPROPRIATE CITY OF MADISON OFFICIALS MUST APPROVE ANY CHANGES PRIOR TO DEVIATION FROM THE APPROVED PLANS.
2. ALL EROSION CONTROL MEASURES SHALL BE CONSTRUCTED AND MAINTAINED BY THE CONTRACTOR IN ACCORDANCE WITH THE WISCONSIN DEPARTMENT OF NATURAL RESOURCES (WDNR) TECHNICAL STANDARDS (REFERRED TO AS BMP'S) AND CITY OF MADISON ORDINANCE. IT IS THE CONTRACTOR'S RESPONSIBILITY TO OBTAIN A COPY OF THESE STANDARDS. CONTRACTOR SHALL BE RESPONSIBLE FOR ANY ADDITIONAL EROSION CONTROL MEASURES WHICH MAY BE NECESSARY TO MEET UNFORESEEN FIELD CONDITIONS.
3. INSTALL PERIMETER EROSION CONTROL MEASURES (SUCH AS CONSTRUCTION ENTRANCES, SILT FENCE AND EXISTING INLET PROTECTION) PRIOR TO ANY SITE WORK, INCLUDING GRADING OR DISTURBANCE OF EXISTING SURFACE COVER, AS SHOWN ON PLAN. MODIFICATIONS TO THE APPROVED EROSION CONTROL MEASURES MAY BE ORDERED TO MEET UNFORESEEN FIELD CONDITIONS IS ALLOWED AS LONG AS MODIFICATIONS CONFORM TO BMP'S. ALL DESIGN MODIFICATIONS MUST BE APPROVED BY THE CITY OF MADISON PRIOR TO DEVIATION OF THE APPROVED PLAN.
4. ADDITIONAL EROSION CONTROL MEASURES, AS REQUESTED BY STATE INSPECTORS, LOCAL INSPECTORS, COUNTY INSPECTORS AND/OR ENGINEER OF RECORD SHALL BE INSTALLED WITHIN 24 HOURS OF REQUEST.
5. INSPECTIONS AND MAINTENANCE OF ALL EROSION CONTROL MEASURES SHALL BE ROUTINE (ONCE PER WEEK MINIMUM) TO ENSURE PROPER FUNCTION OF EROSION CONTROLS AT ALL TIMES. EROSION CONTROL MEASURES ARE TO BE IN WORKING ORDER AT THE END OF EACH WORK DAY.
6. ALL EROSION AND SEDIMENT CONTROL ITEMS SHALL BE INSPECTED WITHIN 24 HOURS OF ALL RAIN EVENTS EXCEEDING 0.5 INCHES. ANY DAMAGED EROSION CONTROL MEASURES SHALL BE REPAIRED OR REPLACED IMMEDIATELY UPON INSPECTION.
7. CONSTRUCTION ENTRANCES SHALL BE INSTALLED AT ALL LOCATIONS OF VEHICLE INGRESS/EGRESS POINTS, ADDITIONAL LOCATIONS OTHER THAN AS SHOWN ON THE PLANS MUST BE PRIOR APPROVED BY THE MUNICIPALITY. CONSTRUCTION ENTRANCES SHALL BE 50' LONG AND NO LESS THAN 12" THICK BY USE OF 3" CLEAR STONE. CONSTRUCTION ENTRANCES SHALL BE MAINTAINED BY THE CONTRACTOR IN A CONDITION WHICH WILL PREVENT THE TRACKING OR FLOWING OF SEDIMENT ONTO ADJACENT PUBLIC STREETS AFTER EACH WORKING DAY OR MORE FREQUENTLY AS REQUIRED.
8. PAVED SURFACES ADJACENT TO CONSTRUCTION SITE VEHICLE ACCESS SHALL BE SWEPT AND/OR SCRAPED TO REMOVE ACCUMULATED SOIL DIRT AND/OR DUST AFTER THE END OF EACH WORK DAY AND AS DIRECTED BY THE CITY OF MADISON.
9. INLET PROTECTION SHALL BE IMMEDIATELY FITTED AT THE INLET OF ALL INSTALLED STORM SEWER A

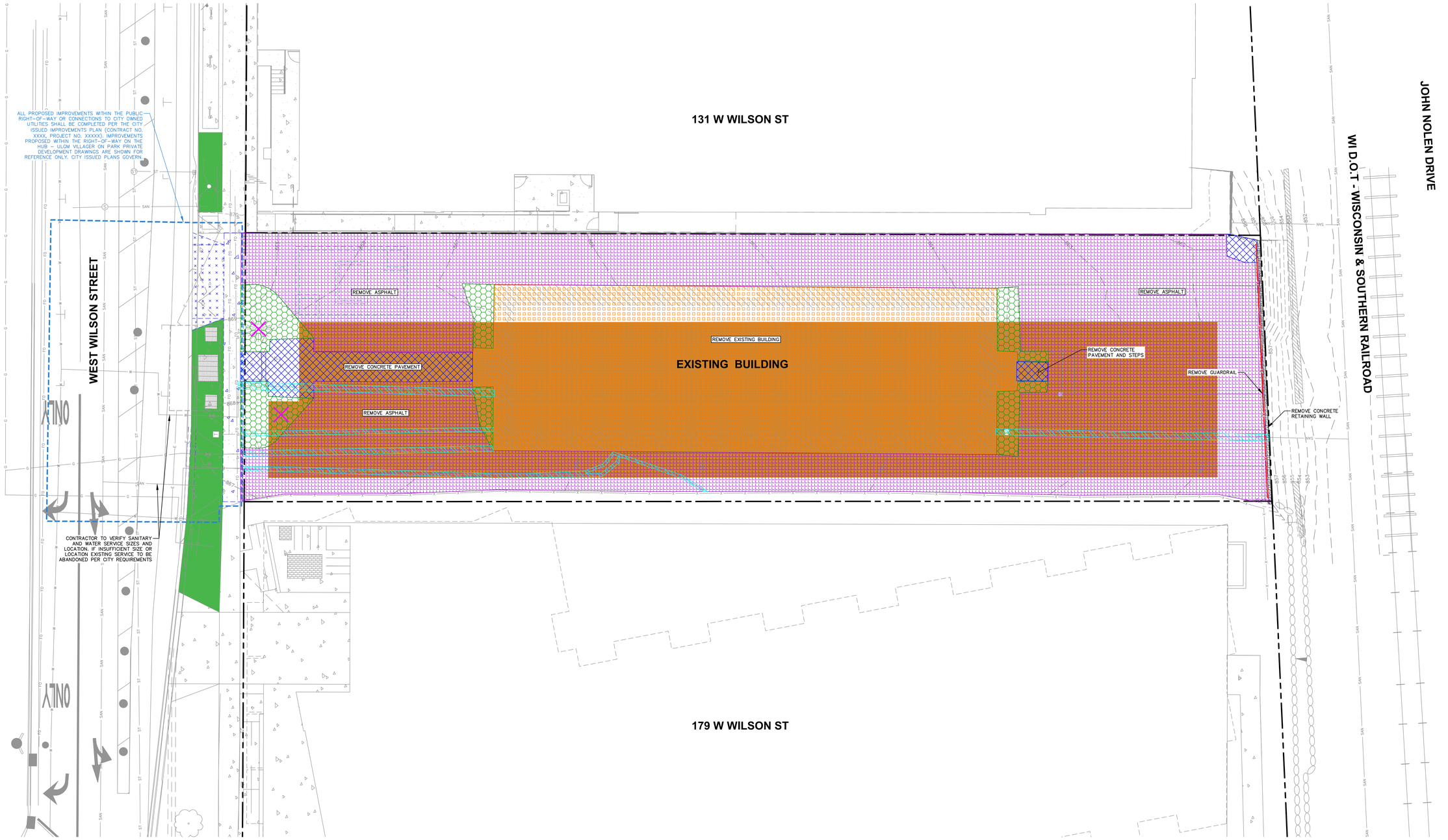

SCALE IN FEET
10' 0 10'

DIGGERS HOTLINE
Toll Free (800) 242-8511

JSD
CREATE THE VISION TELL THE STORY
jsdinc.com
MADISON REGIONAL OFFICE
507 WEST VERONA AVE, SUITE 500
VERONA, WISCONSIN 53593
P. 608.848.5060

CLIENT:
SEA DESIGN

CLIENT ADDRESS:
N3302 SOUTH OAKLAND ROAD
TOWN OF OAKLAND, WI 53538

PROJECT:
139 WEST WILSON ST
REDEVELOPMENT

PROJECT LOCATION:
139 WEST WILSON ST
MADISON, WI 53703

PLAN MODIFICATIONS:

#	Date:	Description:
1	06.26.2023	LAND USE / UDC SUBMITTAL
2	10.20.2023	UDC RE-SUBMITTAL
3	12.11.2023	LAND USE / UDC RE-SUBMITTAL
4		
5		
6		
7		
8		
9		
10		
11		
12		
13		
14		
15		

Designed By: MAS
Reviewed By: KJY
Approved By:

SHEET TITLE:
DEMOLITION PLAN

SHEET NUMBER:
C2.0

JSD PROJECT NO: 22-11487

THESE PLANS AND DESIGNS ARE COPYRIGHT PROTECTED AND MAY NOT BE USED IN WHOLE OR IN PART WITHOUT THE WRITTEN CONSENT OF JSD PROFESSIONAL SERVICES, INC.

File: I:\2022\22-11487\DWG\Civil Sheets\22-11487 - Con Docs.dwg Layout: C2.0 DEMO User: mammel Plotted: Dec 05, 2023 - 9:23am XrefS:

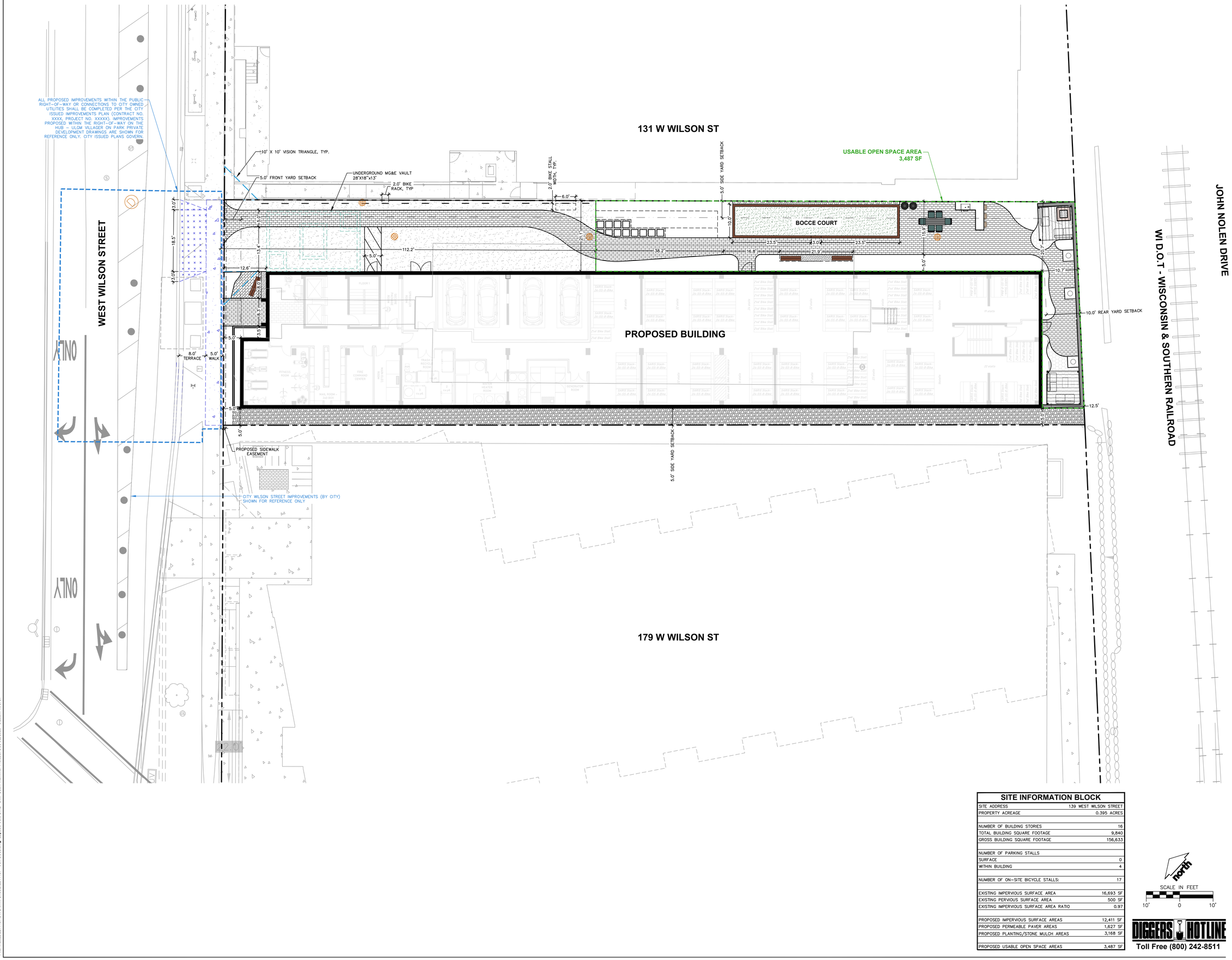

SITE INFORMATION BLOCK

SITE ADDRESS	139 WEST WILSON STREET
PROPERTY ACREAGE	0.395 ACRES
NUMBER OF BUILDING STORIES	16
TOTAL BUILDING SQUARE FOOTAGE	9,840
GROSS BUILDING SQUARE FOOTAGE	156,633
NUMBER OF PARKING STALLS	
SURFACE	0
WITHIN BUILDING	4
NUMBER OF ON-SITE BICYCLE STALLS:	17
EXISTING IMPERVIOUS SURFACE AREA	16,693 SF
EXISTING PERVOUS SURFACE AREA	500 SF
EXISTING IMPERVIOUS SURFACE AREA RATIO	0.97
PROPOSED IMPERVIOUS SURFACE AREAS	12,411 SF
PROPOSED PERMEABLE PAVER AREAS	1,627 SF
PROPOSED PLANTING/STONE MULCH AREAS	3,168 SF
PROPOSED USABLE OPEN SPACE AREAS	3,487 SF

north

SCALE IN FEET

10' 0 10'

DIGGERS HOTLINE
Toll Free (800) 242-8511

JSD
CREATE THE VISION TELL THE STORY
jsdinc.com
MADISON REGIONAL OFFICE
507 WEST VERONA AVE, SUITE 500
VERONA, WISCONSIN 53593
P. 608.848.5060

CLIENT:
SEA DESIGN

CLIENT ADDRESS:
N3302 SOUTH OAKLAND ROAD
TOWN OF OAKLAND, WI 53538

PROJECT:
139 WEST WILSON ST
REDEVELOPMENT

PROJECT LOCATION:
139 WEST WILSON ST
MADISON, WI 53703

PLAN MODIFICATIONS:

#	Date:	Description:
1	06.26.2023	LAND USE / UDC SUBMITTAL
2	10.20.2023	UDC RE-SUBMITTAL
3	12.11.2023	LAND USE / UDC RE-SUBMITTAL
4		
5		
6		
7		
8		
9		
10		
11		
12		
13		
14		
15		

Designed By: MAS
Reviewed By: KJY
Approved By:

SHEET TITLE:
SITE PLAN - DIMENSIONED

SHEET NUMBER:
C3.0

JSD PROJECT NO: 22-11487

THESE PLANS AND DESIGNS ARE COPYRIGHT PROTECTED AND MAY NOT BE USED IN WHOLE OR IN PART WITHOUT THE WRITTEN CONSENT OF JSD PROFESSIONAL SERVICES, INC.

File: I:\2022\22114872DWG\Civil Sheets\22114872 - Con Docs.dwg Layout: C3.0 SITE - DIM User: rhammel Plotted: Dec 05, 2023 - 9:23am XrefS:

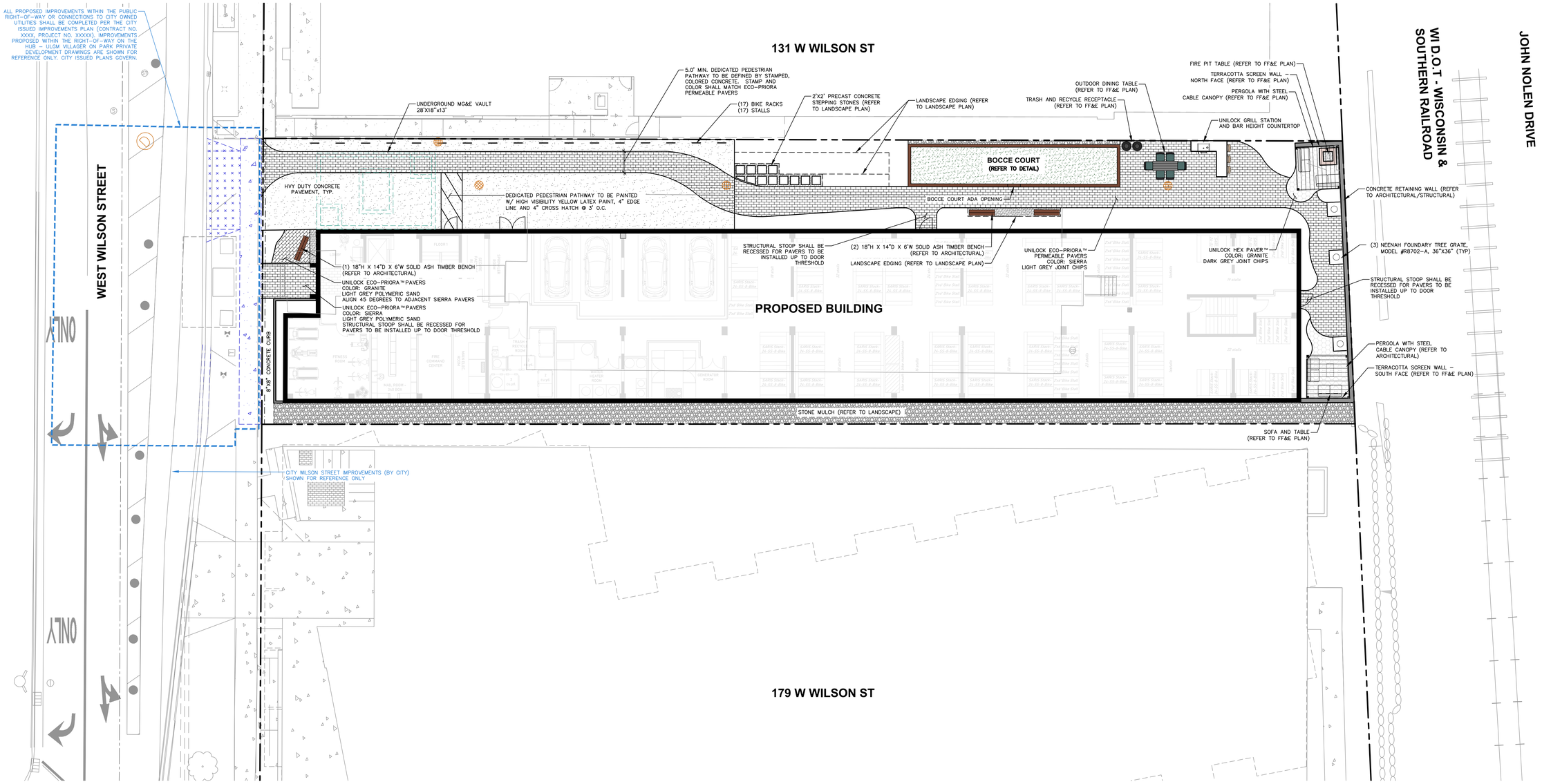

SCALE IN FEET
10' 0 10'

DIGGERS HOTLINE
Toll Free (800) 242-8511

JSD
CREATE THE VISION TELL THE STORY
jsdinc.com
MADISON REGIONAL OFFICE
507 WEST VERONA AVE, SUITE 500
VERONA, WISCONSIN 53593
P. 608.848.5060

CLIENT:
SEA DESIGN

CLIENT ADDRESS:
N3302 SOUTH OAKLAND ROAD
TOWN OF OAKLAND, WI 53538

PROJECT:
139 WEST WILSON ST REDEVELOPMENT

PROJECT LOCATION:
139 WEST WILSON ST
MADISON, WI 53703

PLAN MODIFICATIONS:

#	Date:	Description:
1	06.26.2023	LAND USE / UDC SUBMITTAL
2	10.20.2023	UDC RE-SUBMITTAL
3	12.11.2023	LAND USE / UDC RE-SUBMITTAL
4		
5		
6		
7		
8		
9		
10		
11		
12		
13		
14		
15		

Designed By: MAS
Reviewed By: KJY
Approved By:

SHEET TITLE:
SITE PLAN - ANNOTATED

SHEET NUMBER:
C3.1

JSD PROJECT NO: 22-11487

THESE PLANS AND DESIGNS ARE COPYRIGHT PROTECTED AND MAY NOT BE USED IN WHOLE OR IN PART WITHOUT THE WRITTEN CONSENT OF JSD PROFESSIONAL SERVICES, INC.

File: I:\2022\22-11487\DWG\Civil Sheets\22-11487 - Con Docs.dwg Layout: C3.1 SITE - ANNO User: mammel Plotted: Dec 05, 2023 - 9:23am Xref's:

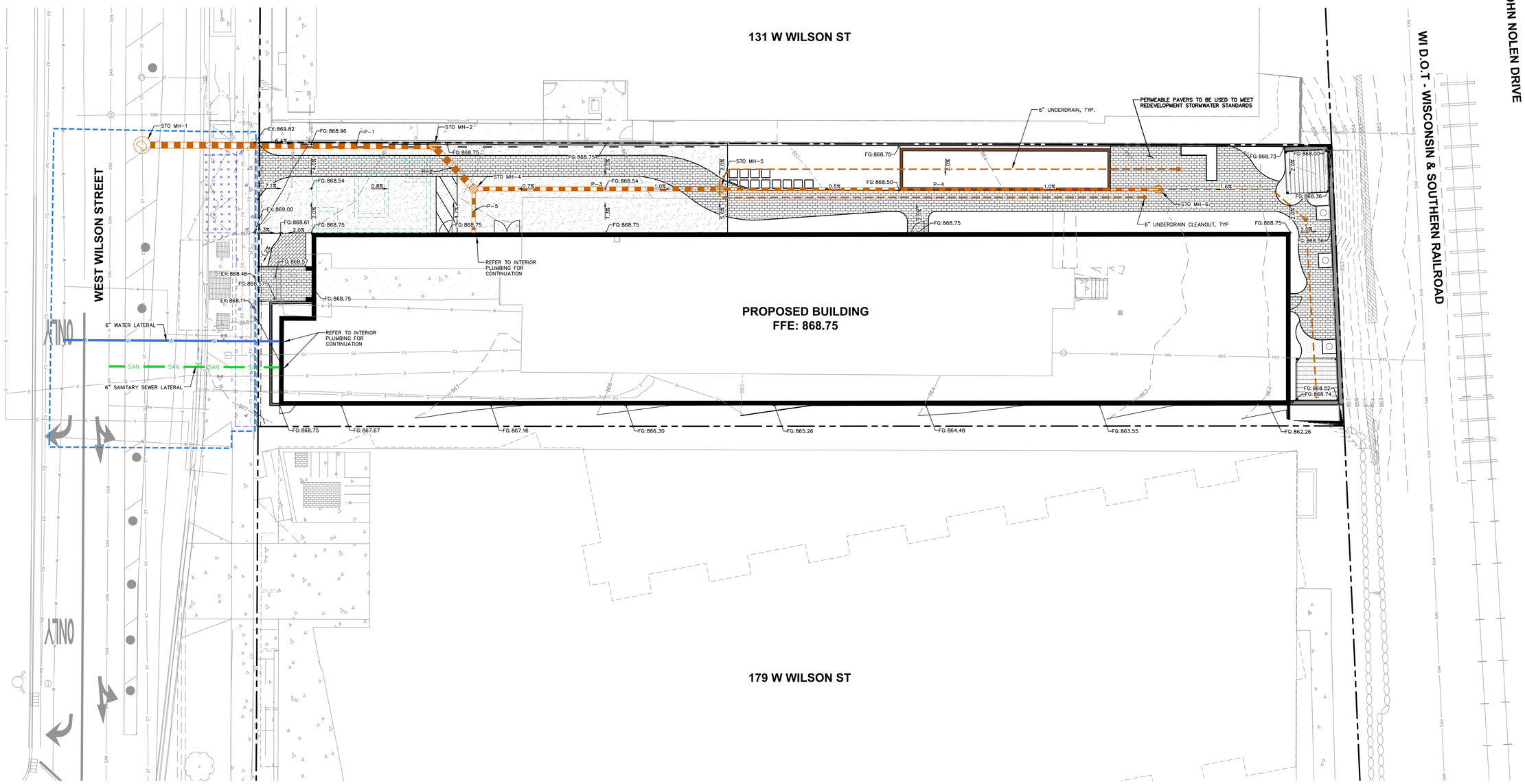

PROPOSED STORM SEWER STRUCTURE TABLE					
LABEL	RIM EL. (FT)	INVERT EL. (FT)	DEPTH (FT)	STRUCTURE DESC.	FRAME & GRATE
STO MH-1	869.12	EX SW INV: 862.52 (24") SE INV: 863.50 (18") EX NE INV: 862.52 (24")	6.6	48 IN MH	R-1550 SOLID GRATE
STO MH-2	868.76	NW INV: 864.19 (18") S INV: 864.29 (18")	4.6	24 IN DB	STANDARD OPEN GRATE
STO MH-4	868.22	N INV: 864.45 (18") SE INV: 864.95 (12") SW INV: 865.12 (10")	3.8	24 IN DB	STANDARD OPEN GRATE
STO MH-5	868.27	NW INV: 865.27 (12") SE INV: 865.60 (8")	3.0	24 IN DB	STANDARD OPEN GRATE
STO MH-6	868.04	NW INV: 866.12 (8")	1.9	24 IN DB	STANDARD OPEN GRATE

PROPOSED STORM SEWER PIPE TABLE							
LABEL	FROM	TO	LENGTH	INVERT EL. (FT)	DISCHARGE EL. (FT)	SLOPE	SIZE & MATERIAL
P-1	STO MH-2	STO MH-1	69'	864.19	863.50	1.00%	18 IN RCP
P-2	STO MH-4	STO MH-2	14'	864.45	864.29	1.15%	18 IN HDPE
P-3	STO MH-5	STO MH-4	58'	865.27	864.95	0.55%	12 IN HDPE
P-4	STO MH-6	STO MH-5	104'	866.12	865.60	0.50%	8 IN HDPE
P-5	ROOF	STO MH-4	10'	865.27	865.12	1.50%	10 IN HDPE

north

SCALE IN FEET

10' 0 10'

DIGGERS HOTLINE
Toll Free (800) 242-8511

JSD
CREATE THE VISION TELL THE STORY
jsdinc.com
MADISON REGIONAL OFFICE
507 WEST VERONA AVE, SUITE 500
VERONA, WISCONSIN 53593
P. 608.848.5060

CLIENT:
SEA DESIGN

CLIENT ADDRESS:
N3302 SOUTH OAKLAND ROAD
TOWN OF OAKLAND, WI 53538

PROJECT:
139 WEST WILSON ST
REDEVELOPMENT

PROJECT LOCATION:
139 WEST WILSON ST
MADISON, WI 53703

PLAN MODIFICATIONS:

#	Date:	Description:
1	06.26.2023	LAND USE / UDC SUBMITTAL
2	10.20.2023	UDC RE-SUBMITTAL
3	12.11.2023	LAND USE / UDC RE-SUBMITTAL
4		
5		
6		
7		
8		
9		
10		
11		
12		
13		
14		
15		

Designed By: MAS
Reviewed By: KJY
Approved By:

SHEET TITLE:
GRADING, EROSION CONTROL, AND UTILITY PLAN

SHEET NUMBER:
C4.0

JSD PROJECT NO: 22-11487

THESE PLANS AND DESIGNS ARE COPYRIGHT PROTECTED AND MAY NOT BE USED IN WHOLE OR IN PART WITHOUT THE WRITTEN CONSENT OF JSD PROFESSIONAL SERVICES, INC.

File: I:\2022\22-11487\DWG\Civil Sheets\22111487 - Con Docs.dwg Layout: C4.0 GRADING-UTILITY User: mammel Plotted: Dec 05, 2023 - 9:23am Xref's:

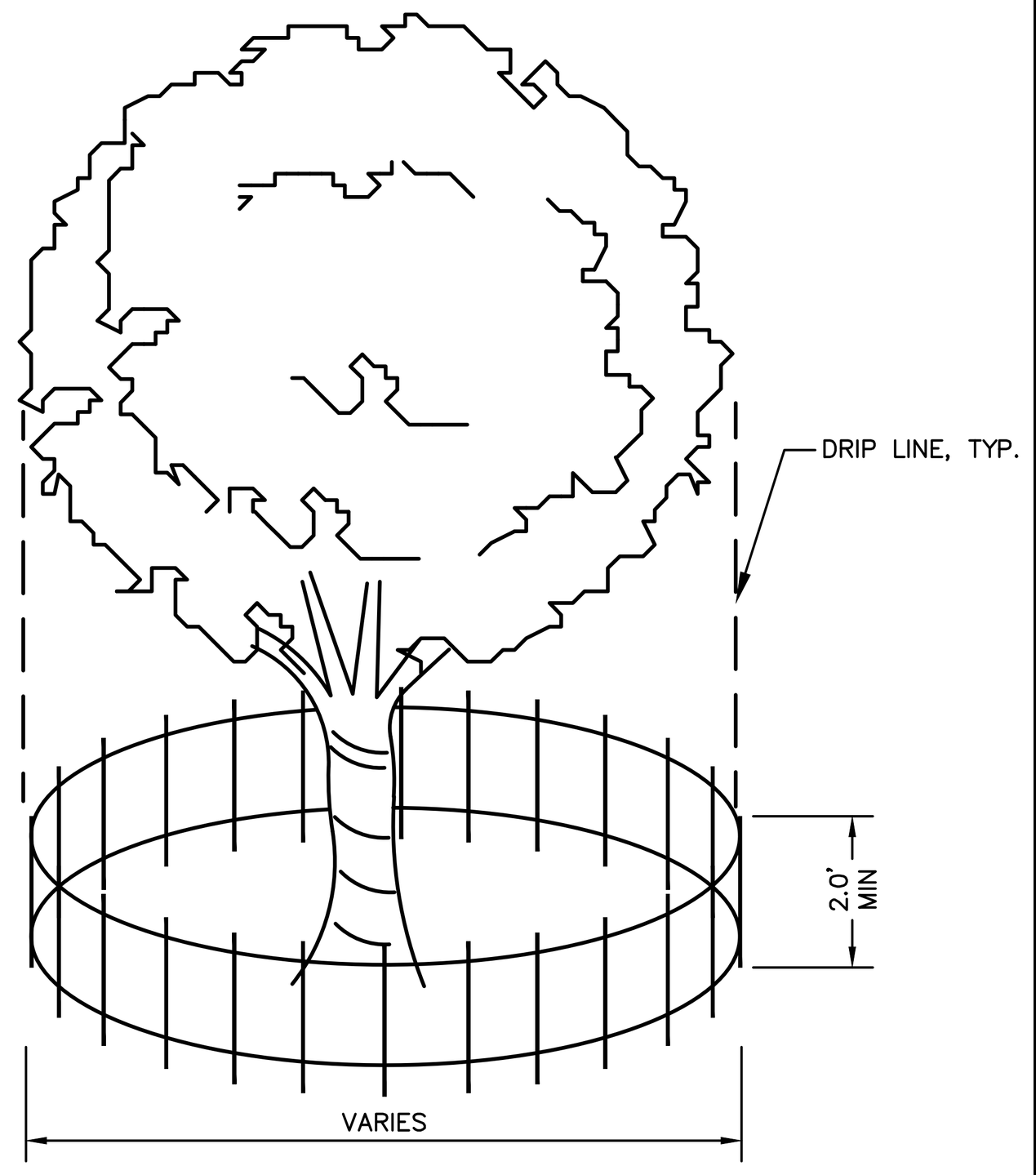

NOTE:

FENCE TO BE INSTALLED TO PROTECT EXISTING TREE(S) DURING CONSTRUCTION. CONTRACTOR TO COORDINATE FENCE LOCATION WITH OWNER PRIOR TO INSTALLATION. SILT FENCE MATERIAL OR OTHER APPROVED BARRIER MATERIAL MAY BE USED.

TREE PROTECTION

N.T.S.

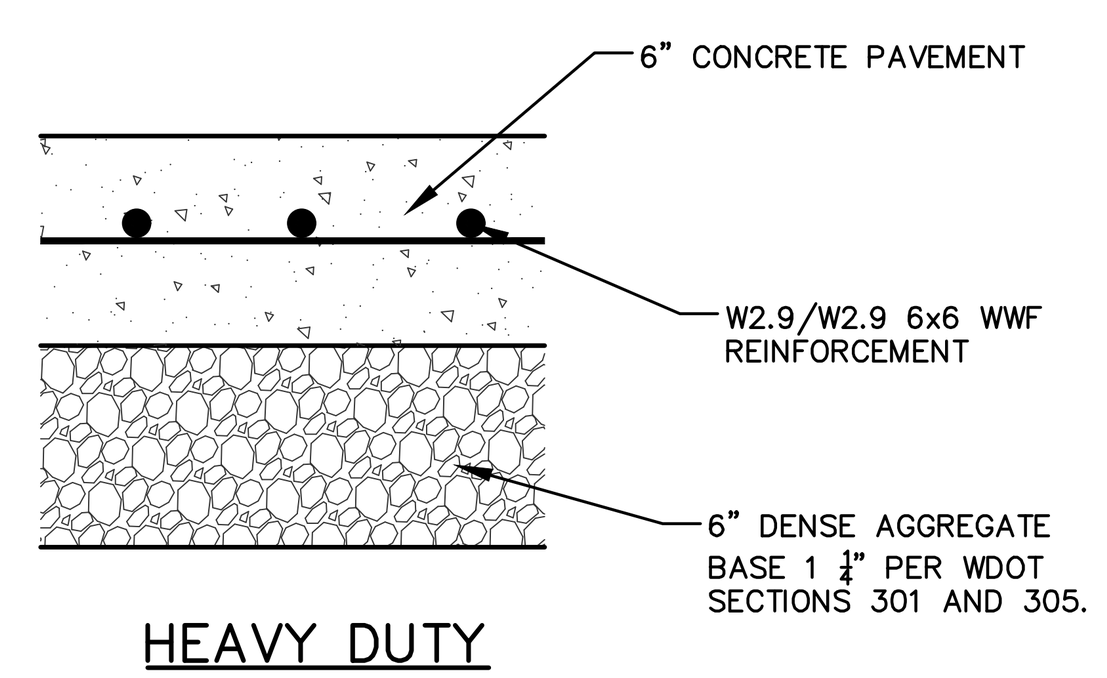

HEAVY DUTY CONCRETE PAVEMENT SECTION

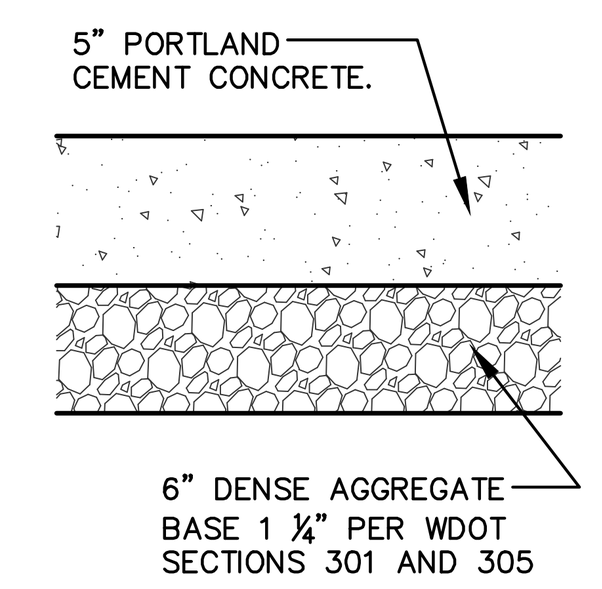

CONCRETE SIDEWALK SECTION

GENERAL NOTES:

1. FINAL PAVEMENT CROSS SECTION DESIGN SHALL BE BASED ON GEOTECHNICAL REPORT TITLED "GEOTECHNICAL SUBSURFACE INVESTIGATION WILSON STREET APARTMENT BUILDING 402 WILSON STREET, MADISON, WISCONSIN" AS PREPARED BY GEOTEST DATED **NOVEMBER 1, 2022**.
2. BASED ON THE GEOTECHNICAL EXPLORATION AND REPORT, RECOMPACTION/PROOF ROLLING TO BE COMPLETED PRIOR TO PLACEMENT OF PAVEMENTS. UNDERCUTTING OR STABILIZATION OF EXISTING SUB BASE MATERIALS MAY BE REQUIRED.
3. WISDOT STANDARD SPECIFICATIONS FOR HIGHWAY AND STRUCTURE CONSTRUCTION, INCLUDING SUPPLEMENTAL SPECIFICATIONS, COMPACTION REQUIREMENTS:
   - CONCRETE: REFER TO SECTION 415.
   - BASE COURSE: REFER TO SECTION 301.3.4.2, STANDARD COMPACTION.
4. CONCRETE EQUIPMENT PADS SHALL HAVE A MINIMUM 6" THICK PORTLAND CEMENTER CONCRETE OVER COMPACTED 6" THICK DENSE GRADED BASE WITH REINFORCEMENT FOR CRACK CONTROL.

CONCRETE PAVEMENT SECTIONS

N.T.S.

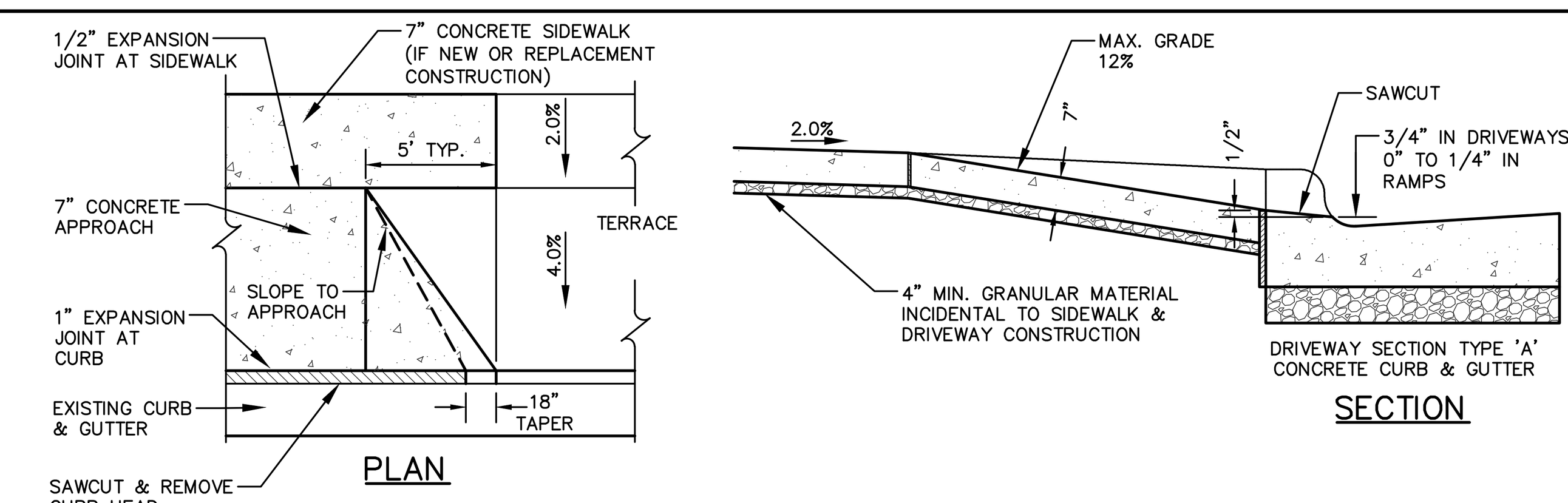

REV. 2-12-2021

COMMERCIAL ENTRANCE

N.T.S.

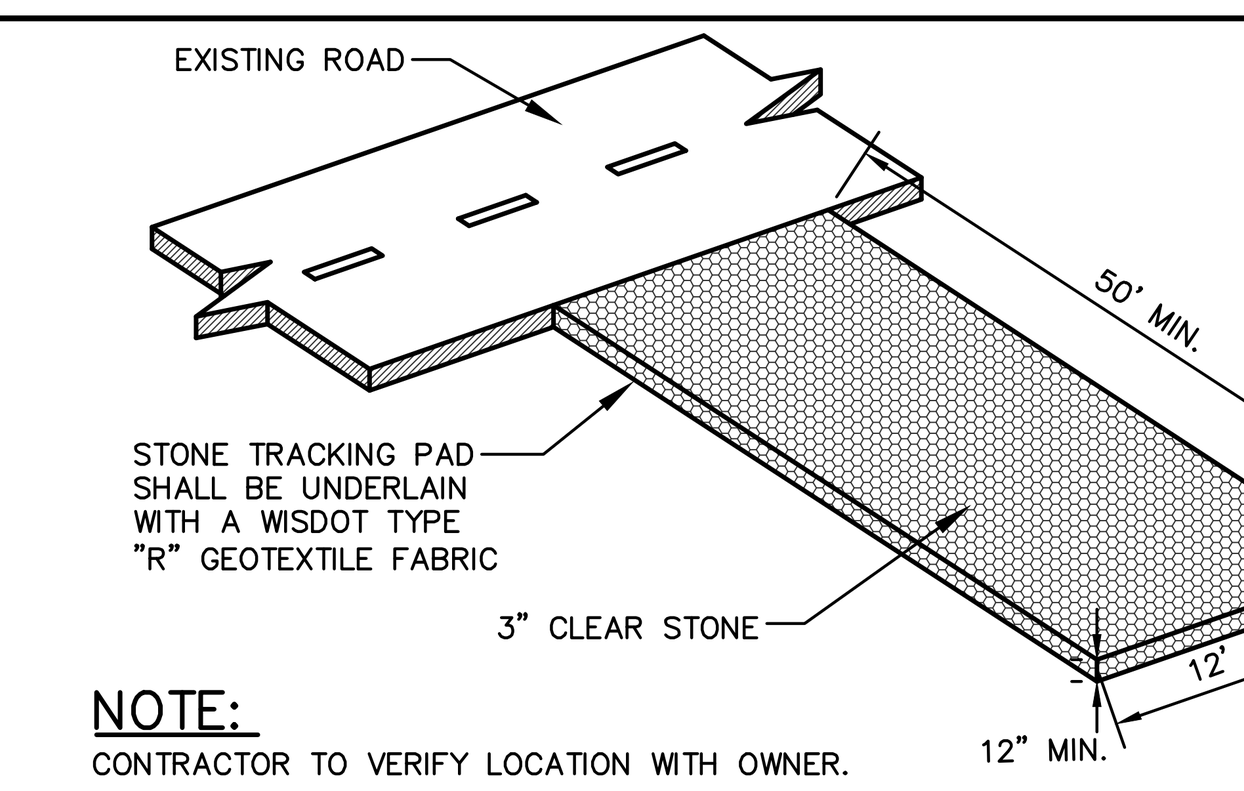

NOTE:

CONTRACTOR TO VERIFY LOCATION WITH OWNER.

CONSTRUCTION ENTRANCE

N.T.S.

NOTES:

1) ALL AGGREGATE MATERIAL SHALL BE CRUSHED, ANGULAR STONE AND FREE OF FINES.

2) SURFACE SLOPE SHALL BE A MINIMUM OF 1% AND A MAXIMUM OF 5%.

3) THE MINIMUM AGGREGATE THICKNESSES ARE AFTER COMPACTION.

4) ONLY USED CRUSHED, ANGULAR GRANITE CHIPS FOR JOINT MATERIAL.

5) REFER TO DNR TECHNICAL STANDARD NO. 1008 FOR MORE DETAIL

6) PAVER EDGE TO BE TERMINATED WITH STAINLESS STEEL EDGING TO BE APPROVED BY OWNER

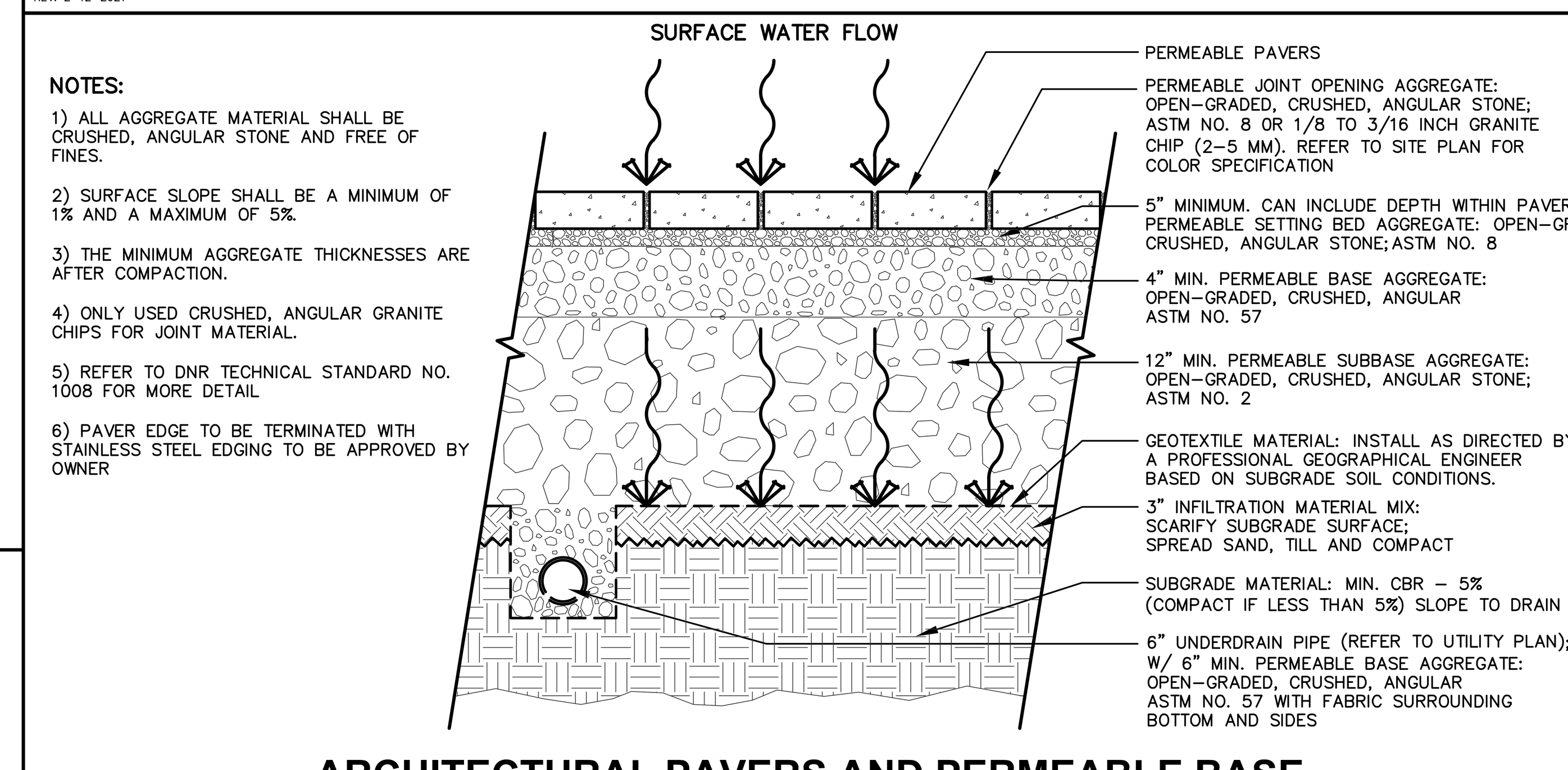

ARCHITECTURAL PAVERS AND PERMEABLE BASE

N.T.S.

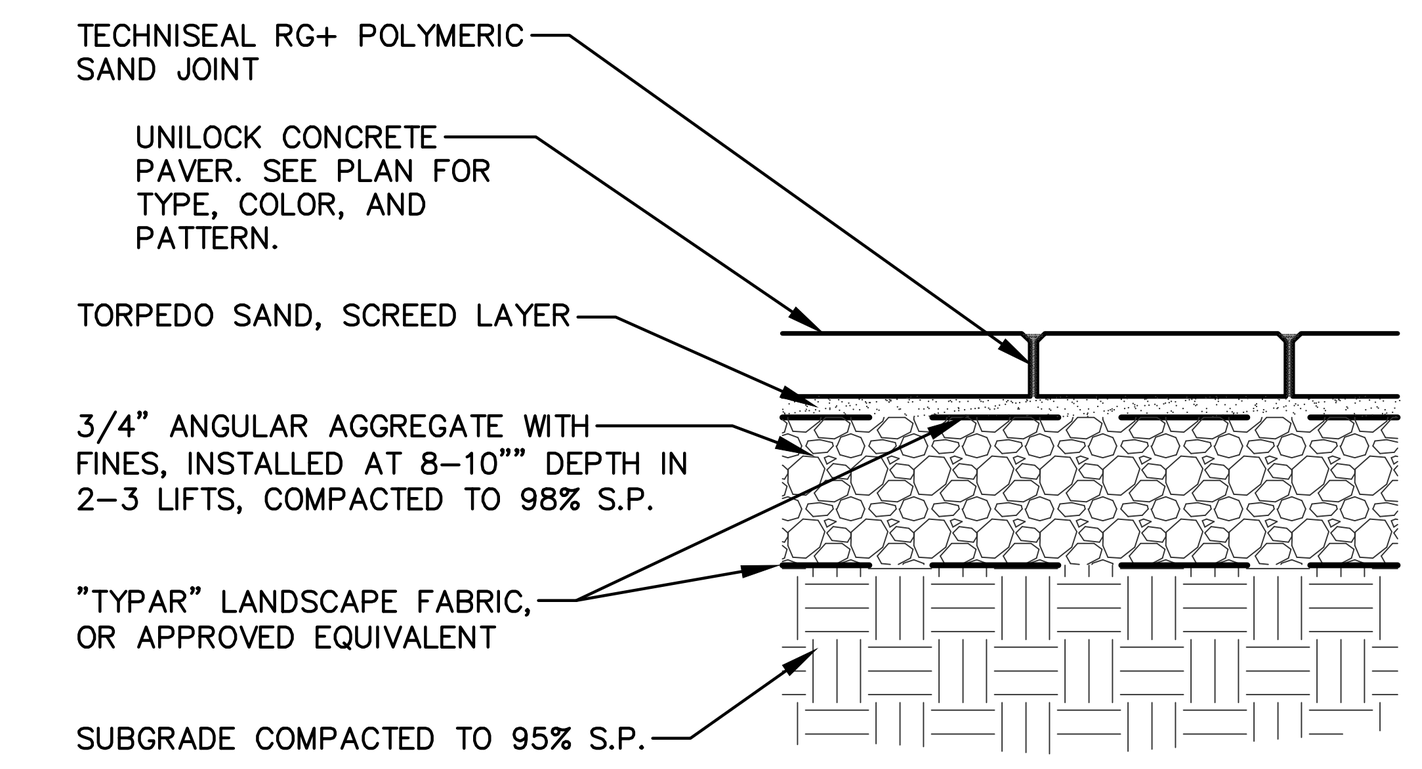

GENERAL NOTES:

- POLYMERIC SAND TO BE TECHNISEAL RG+, COLOR LIGHT GREY, INSTALLED PER MANUFACTURER'S INSTRUCTIONS

PAVER ON AGGREGATE BASE

N.T.S.

FLEXSTORM INLET FILTERS TO MEET DANE COUNTY EROSION CONTROL STANDARDS

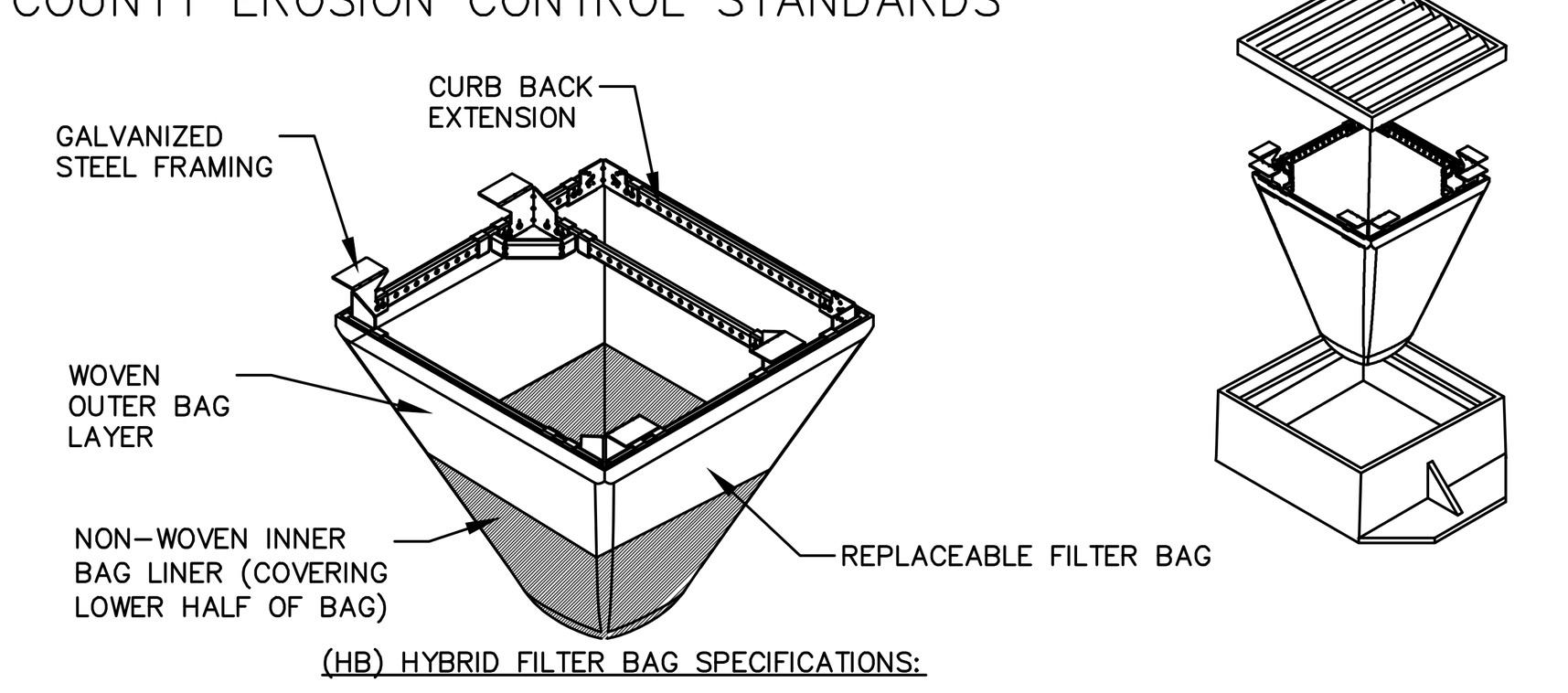

(HB) HYBRID FILTER BAG SPECIFICATIONS:

INSTALLATION INSTRUCTIONS:

1. REMOVE GRATE FROM THE DRAINAGE STRUCTURE
2. CLEAN STONE AND DIRT FROM LEDGE (LIP) OF DRAINAGE STRUCTURE
3. DROP THE INLET FILTER THROUGH THE CLEAR OPENING SUCH THAT THE HANGERS REST FIRMLY ON THE LIP OF THE STRUCTURE
4. REPLACE THE GRATE AND CONFIRM IT IS NOT ELEVATED MORE THAN 1/8"

MAINTENANCE GUIDELINES:

1. EMPTY THE SEDIMENT BAG IF MORE THAN HALF FILLED WITH SEDIMENT AND DEBRIS
2. REMOVE THE GRATE, ENGAGE THE LIFTING POINTS, AND LIFT FILTER FROM THE DRAINAGE STRUCTURE.
3. DISPOSE OF SEDIMENT AND DEBRIS BY THE ENGINEERING OR MAINTENANCE CONTRACT 4. ALTERNATIVELY, AN INDUSTRIAL VACUUM CAN BE USED TO COLLECT SEDIMENT FROM THE FILTER BAG

CATCH-IT INLET FILTER (Temporary Inlet Protection)

Neenah Casting	Inlet Type	Grate Size	Opening Size	Bag Cap (ft³)	Flow Ratings (CFS) HB (Hybrid Bag)	Flow Ratings (CFS) Bypass	ADS P/N
3067	Curb Box	35.25 x 17.75	33.0 x 15.0	4.4	2.0	5.8	62LCBEXTHB
3246A	Curb Box	35.75 x 23.875	33.5 x 21.0	4.2	1.1	3.3	62LCB3624HB
3030	Square/Rect (SQ)	23 x 16	20.5 x 13.5	1.6	0.7	2.2	62MCB2316HB
3067-C	Square/Rect (SQ)	35.25 x 17.75	33 x 15	3.2	1.0	5.2	62LSQ3618HB
R-2501	Round (RD)	~26	~24	2.3	0.8	5.2	62MRD26HB
R-1772/2560	Round (RD)	22.25-23.5	20.5-21	1.5	0.6	4.6	62MRD22HB

Woven and Non-Woven Geotextile Filter Bag Properties (Minimum Average Roll Values)

PROPERTY	TEST METHOD	WOVEN (OUTER)	NON-WOVEN (LINER)
TENSILE STRENGTH	ASTM D4632	350 x 225 Lbs	100 Lbs
ELONGATION	ASTM D4632	20% x 15%	50%
CBR PUNCTURE	ASTM D6241	1000 Lbs	65 Lbs
TRAPEZOIDAL TEAR	ASTM D4533	110 x 75 Lbs	45 Lbs
UV RESISTANCE	ASTM D4355	90%	70%
OPENING SIZE (AOS)	ASTM D4751	20 US STD SIEVE	40 US STD SIEVE
PERMITTIVITY	ASTM D4491	1.5 Sec⁻¹	2.0 Sec⁻¹
WATER FLOW RATE	ASTM D4491	200 gal/min/ft²	145 gal/min/ft²
MINIMUM FILTER BAG VOLUME		2 CUBIC FT	

FLEXSTORM INLET FILTERS CATCH IT

SIZE C DWG NO IPP Flexstorm HD Specifications REV A SHEET 1 OF 1

REV. 7-01-2019

FRAMED INLET PROTECTION

N.T.S.

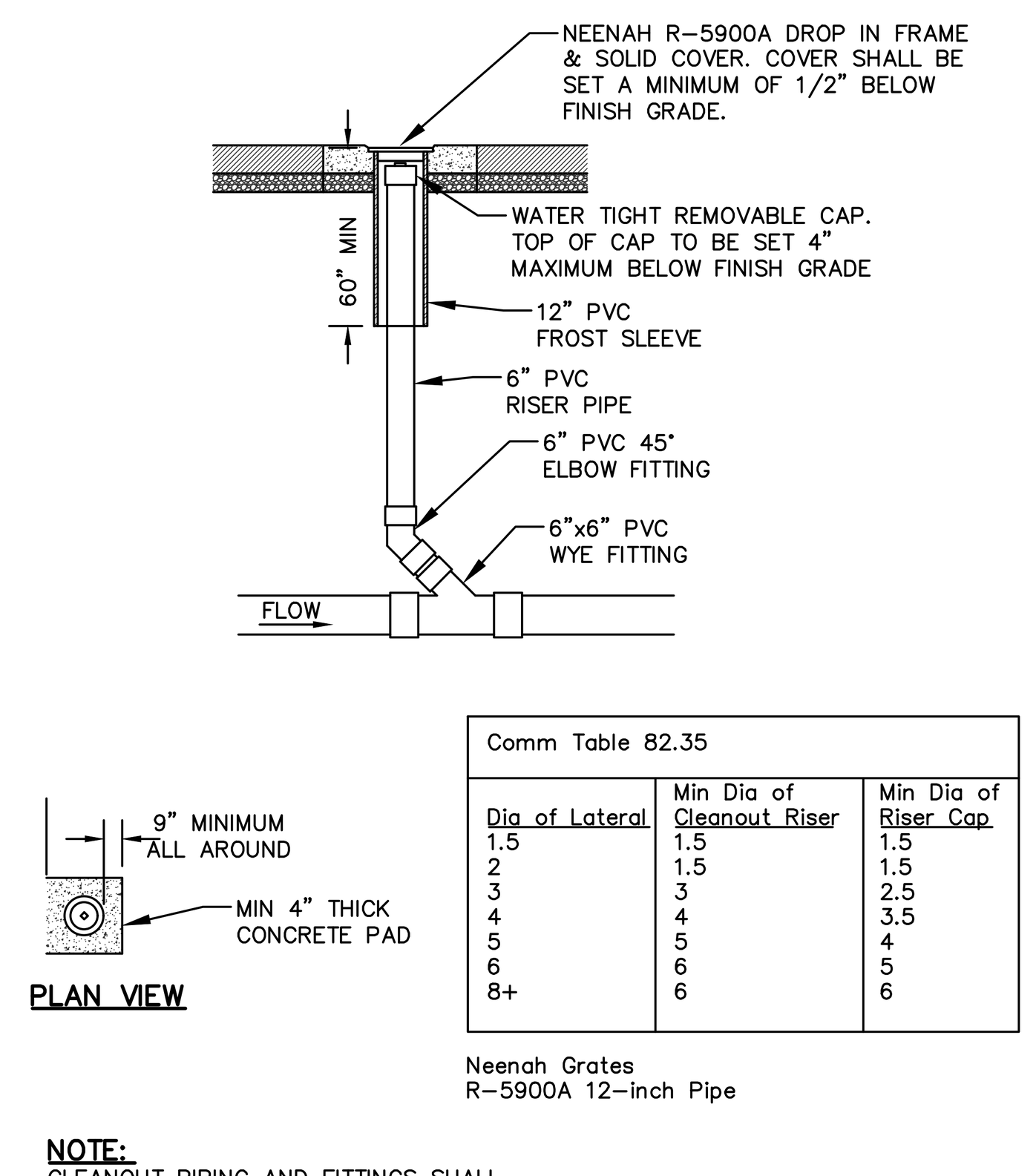

Comm Table 82.35

Dia of Lateral	Min Dia of Cleanout Riser	Min Dia of Riser Cap
1.5	1.5	1.5
2	1.5	1.5
3	3	2.5
4	4	3.5
5	5	4
6	6	5
8+	6	6

Neenah Grates R-5900A 12-inch Pipe

NOTE:
CLEANOUT PIPING AND FITTINGS SHALL MATCH SEWER LATERAL MATERIAL

REV. 12-6-2018

SEWER CLEANOUT

N.T.S.

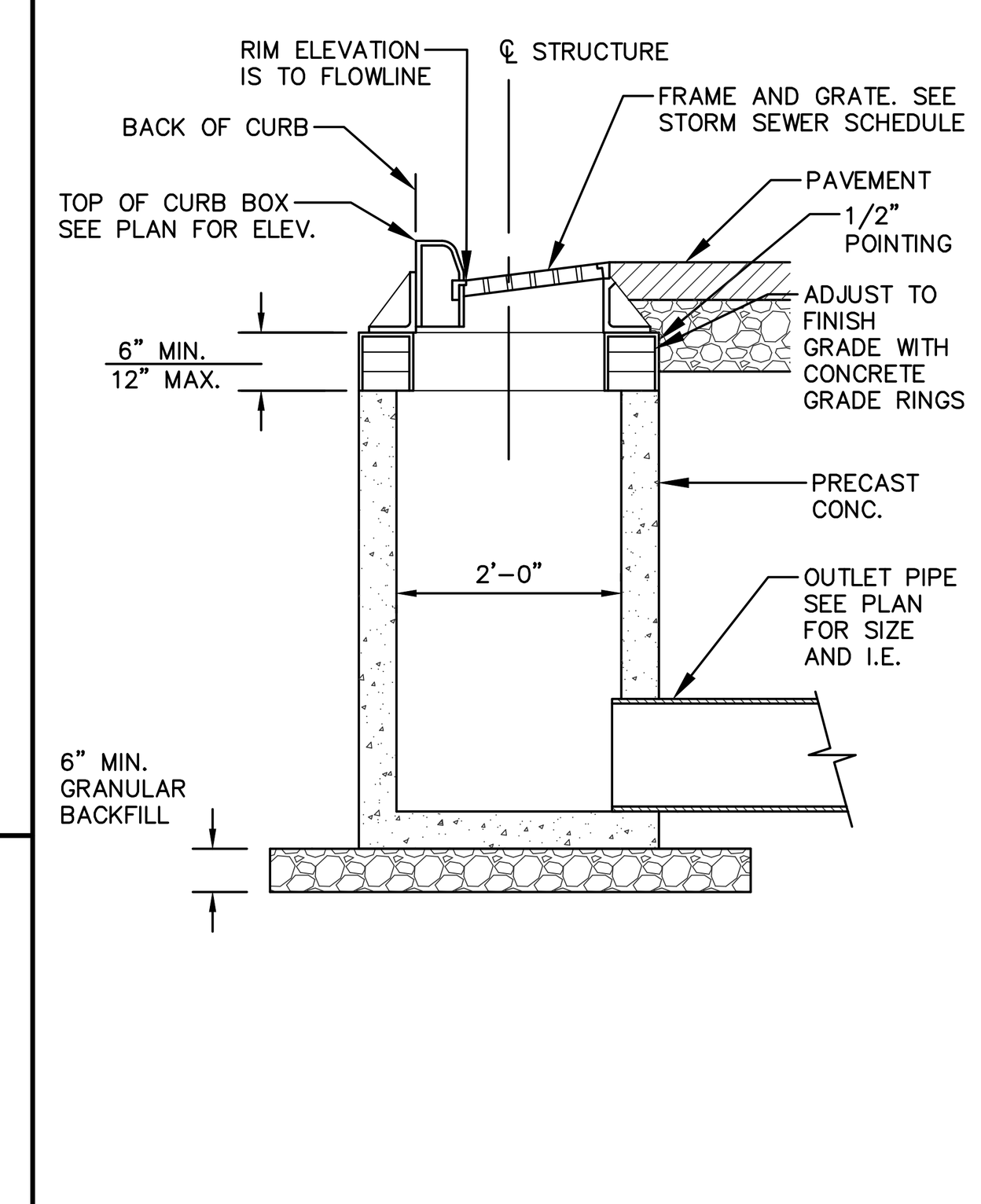

STORM INLET

N.T.S.

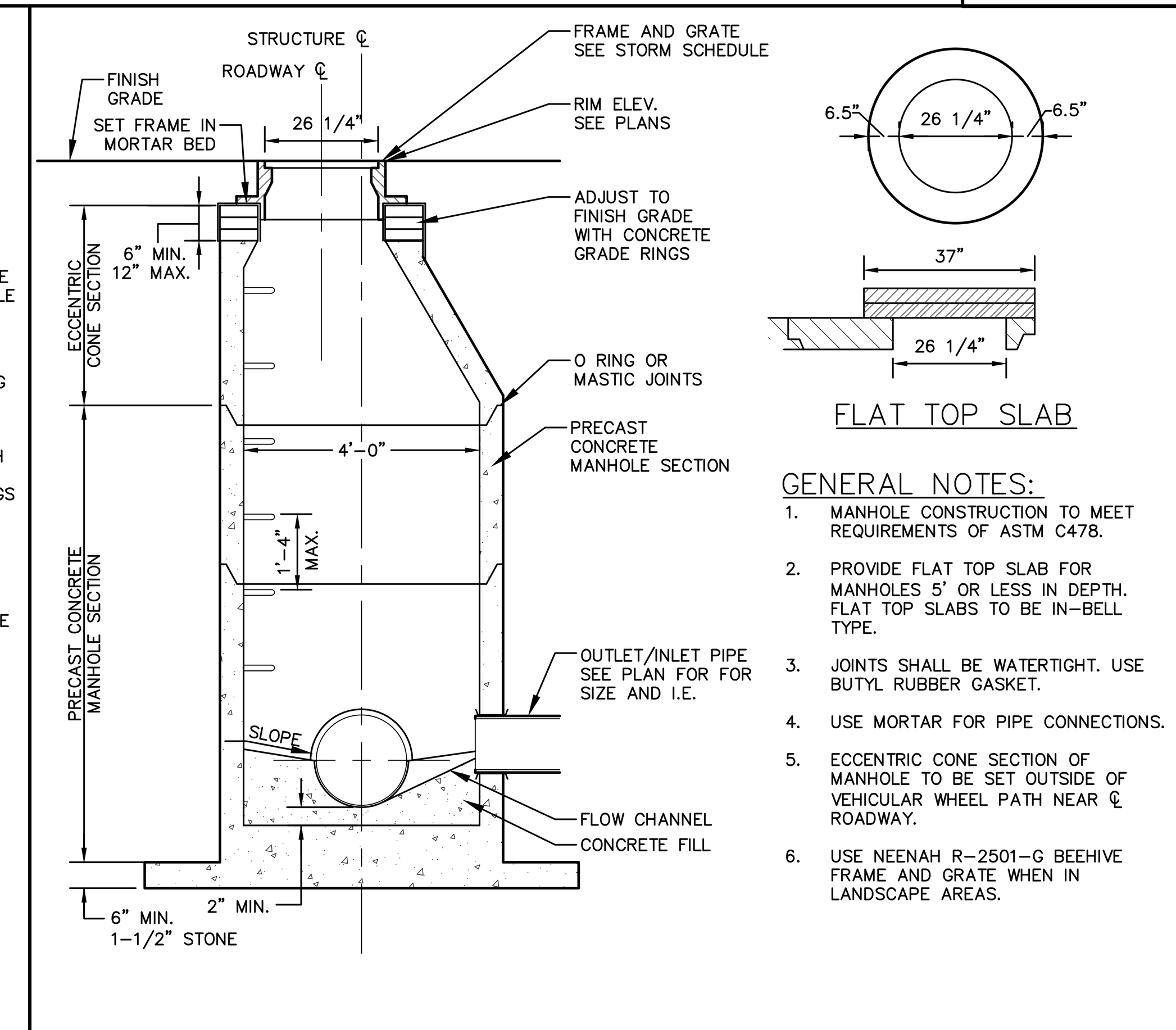

GENERAL NOTES:

1. MANHOLE CONSTRUCTION TO MEET REQUIREMENTS OF ASTM C478.
2. PROVIDE FLAT TOP SLAB FOR MANHOLES 5' OR LESS IN DEPTH. FLAT TOP SLABS TO BE IN-BELL TYPE.
3. JOINTS SHALL BE WATERTIGHT. USE BUTYL RUBBER GASKET.
4. USE MORTAR FOR PIPE CONNECTIONS.
5. ECCENTRIC CONE SECTION OF MANHOLE TO BE SET OUTSIDE OF VEHICULAR WHEEL PATH NEAR ℄ ROADWAY.
6. USE NEENAH R-2501-G BEEHIVE FRAME AND GRATE WHEN IN LANDSCAPE AREAS.

STORM SEWER MANHOLE

N.T.S.

MADRAX DIVISION
GRABER MANUFACTURING, INC.
1080 UNIEK DRIVE
WAUNAKEE, WI 53597
P(800) 448-7931, P(608) 849-1080, F(608) 849-1081
WWW.MADRAX.COM, E-MAIL: SALES@MADRAX.COM

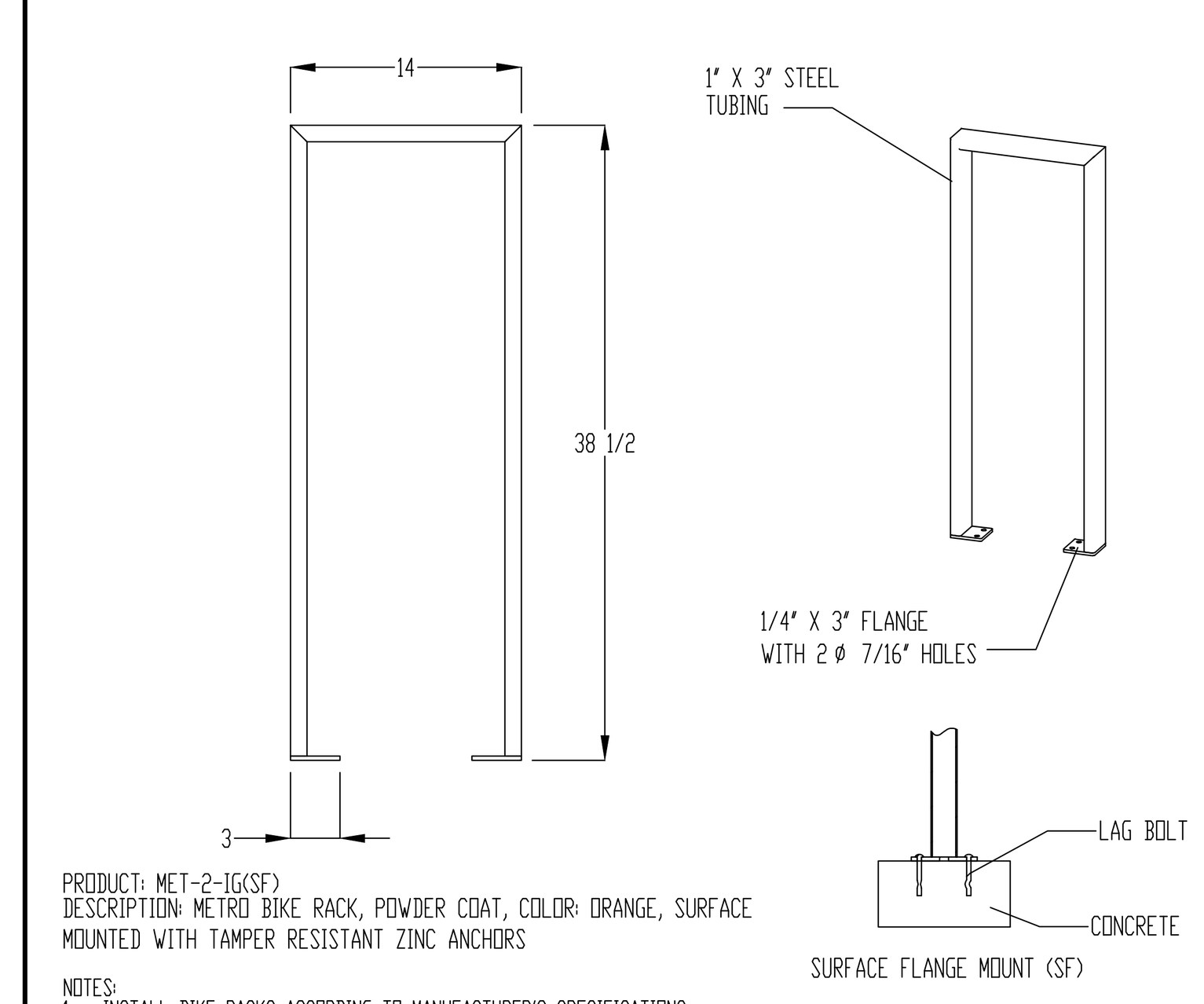

PRODUCT: MET-2-IG(SF)
DESCRIPTION: METRO BIKE RACK, POWDER COAT, COLOR: ORANGE, SURFACE MOUNTED WITH TAMPER RESISTANT ZINC ANCHORS

NOTES:
1. INSTALL BIKE RACKS ACCORDING TO MANUFACTURER'S SPECIFICATIONS.

CONFIDENTIAL DRAWING AND INFORMATION IS NOT TO BE COPIED OR DISCLOSED TO OTHERS WITHOUT THE CONSENT OF GRABER MANUFACTURING, INC. SPECIFICATIONS ARE SUBJECT TO CHANGE WITHOUT NOTICE.

©2020 GRABER MANUFACTURING, INC. ALL PROPRIETARY RIGHTS RESERVED.

BIKE RACK

N.T.S.

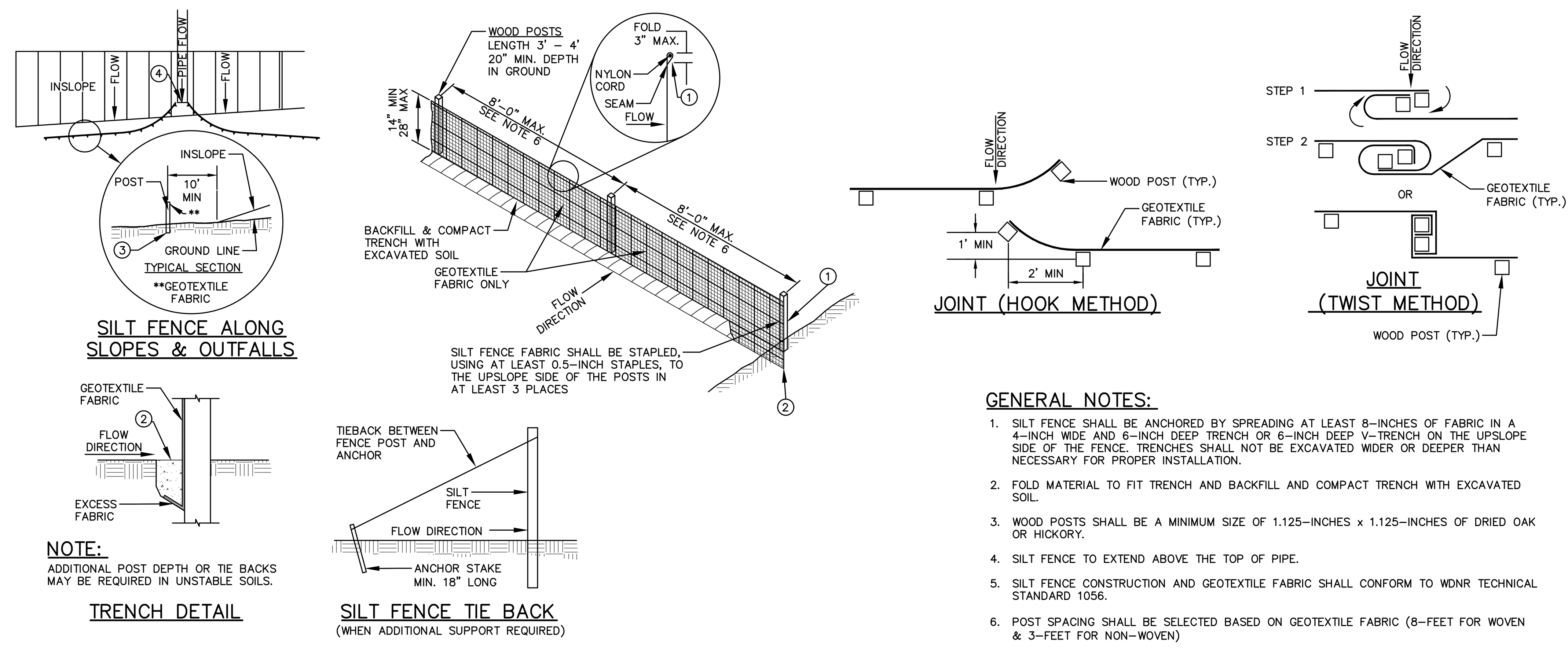

NOTE:
ADDITIONAL POST DEPTH OR TIE BACKS MAY BE REQUIRED IN UNSTABLE SOILS.

GENERAL NOTES:

1. SILT FENCE SHALL BE ANCHORED BY SPREADING AT LEAST 8-INCHES OF FABRIC IN A 4-INCH WIDE AND 6-INCH DEEP TRENCH OR 6-INCH DEEP V-TRENCH ON THE UPSLOPE SIDE OF THE FENCE. TRENCHES SHALL NOT BE EXCAVATED WIDER OR DEEPER THAN NECESSARY FOR PROPER INSTALLATION.
2. FOLD MATERIAL TO FIT TRENCH AND BACKFILL AND COMPACT TRENCH WITH EXCAVATED SOIL.
3. WOOD POSTS SHALL BE A MINIMUM SIZE OF 1.125-INCHES x 1.125-INCHES OF DRIED OAK OR HICKORY.
4. SILT FENCE TO EXTEND ABOVE THE TOP OF PIPE.
5. SILT FENCE CONSTRUCTION AND GEOTEXTILE FABRIC SHALL CONFORM TO WDNR TECHNICAL STANDARD 1056.
6. POST SPACING SHALL BE SELECTED BASED ON GEOTEXTILE FABRIC (8-FEET FOR WOVEN & 3-FEET FOR NON-WOVEN)

REV. 7-01-2019

SILT FENCE

N.T.S.

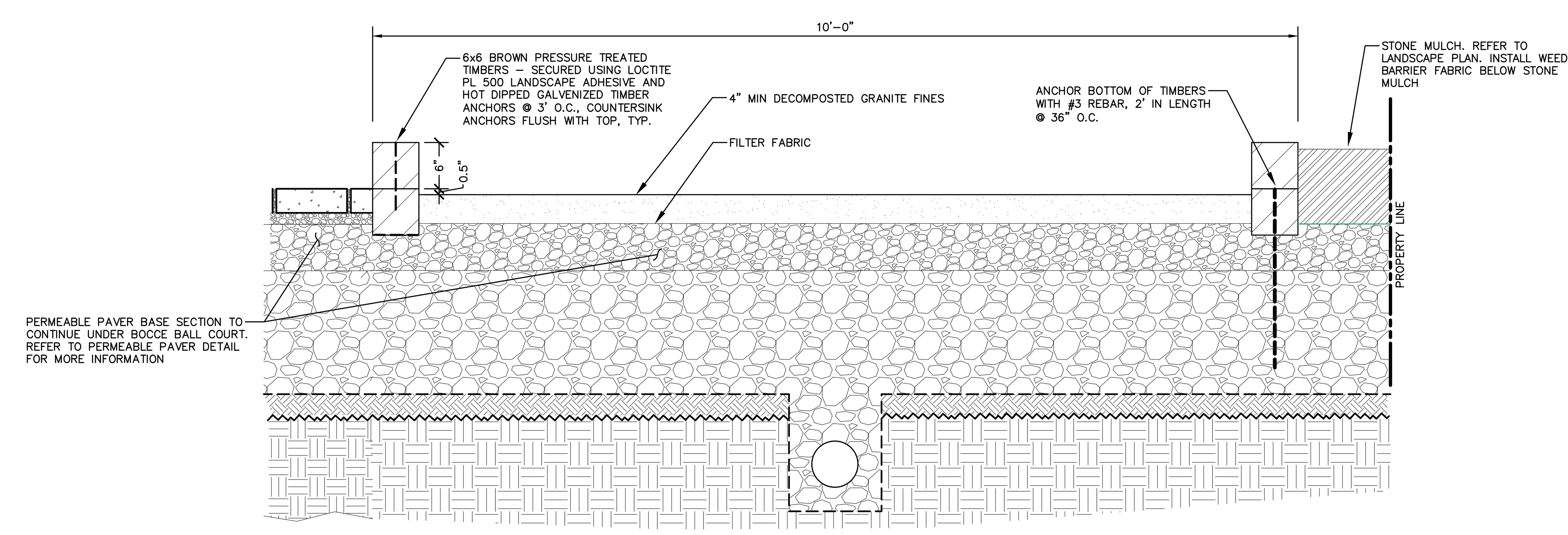

BOCCE COURT SECTION VIEW

N.T.S.

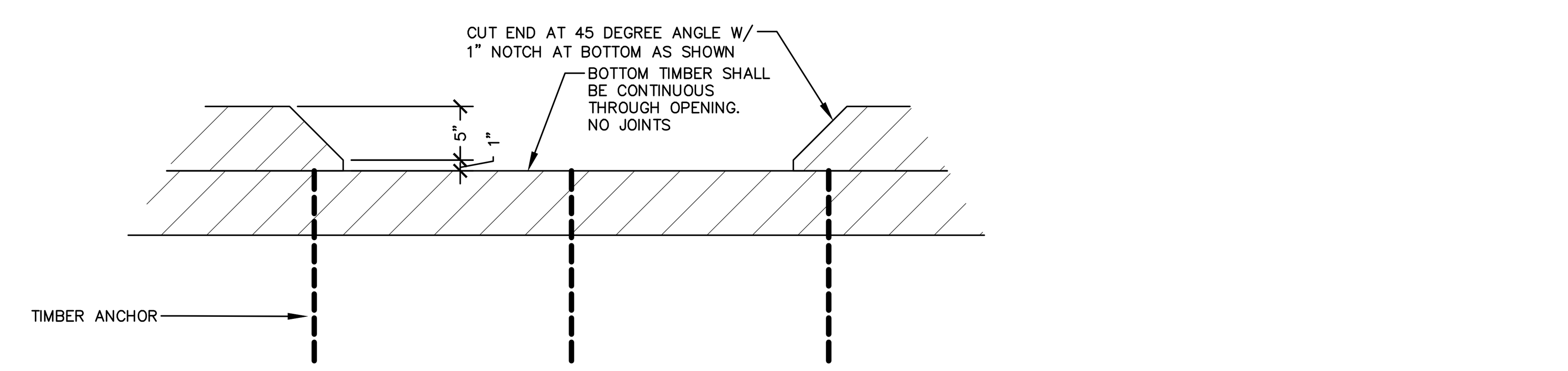

BOCCE COURT ADA OPENING

N.T.S.

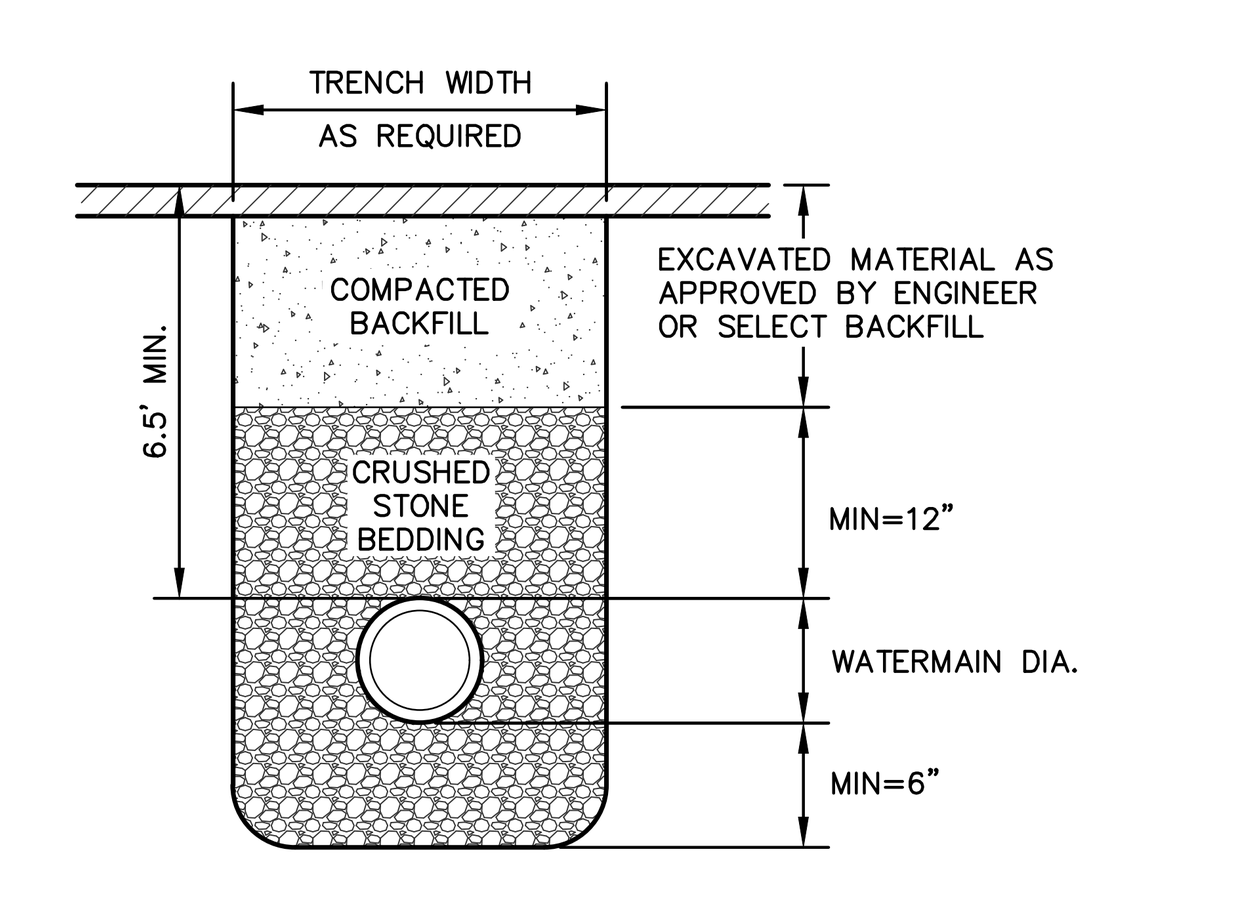

WATERMAIN BEDDING

N.T.S.

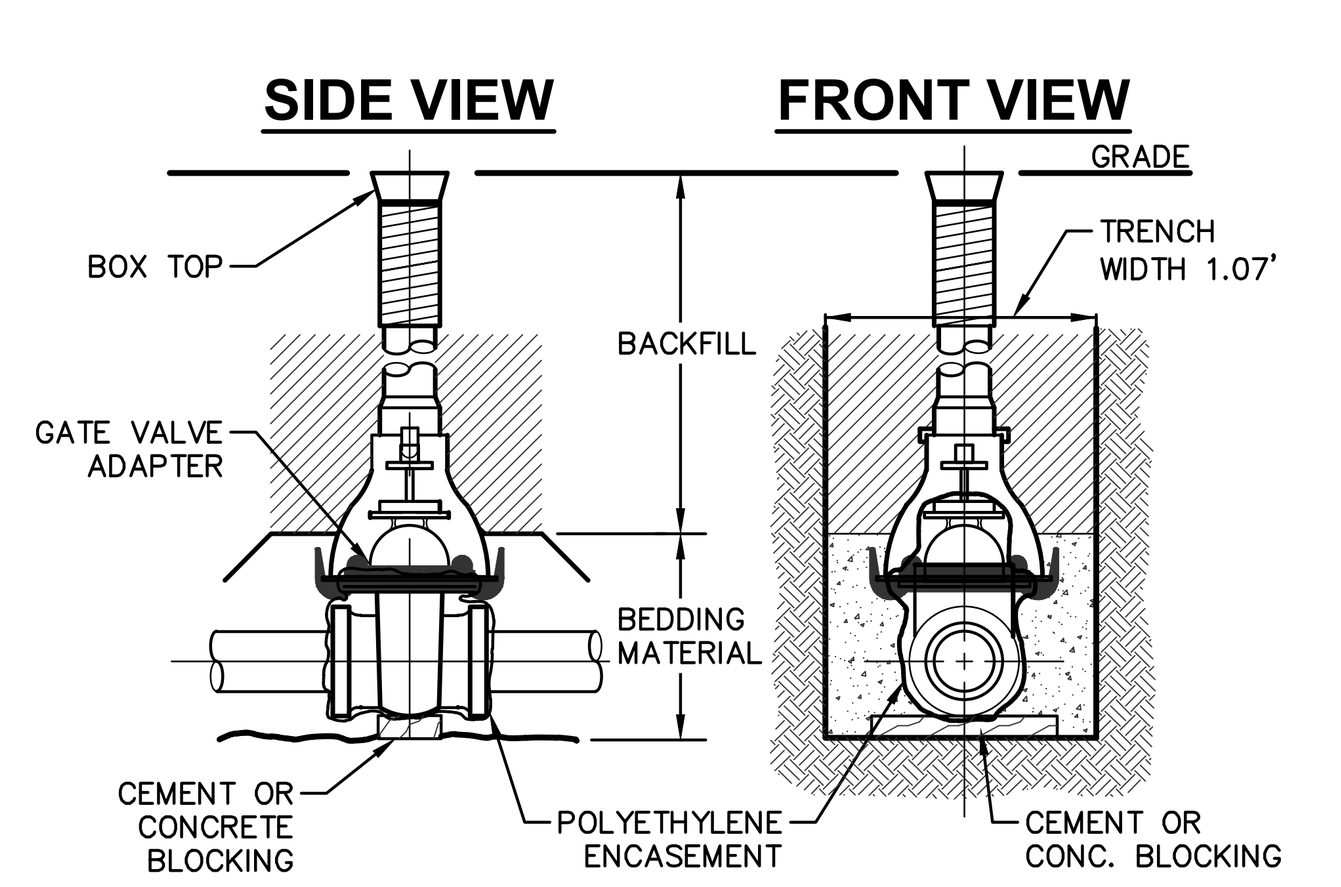

GATE VALVE BOX SETTING

N.T.S.

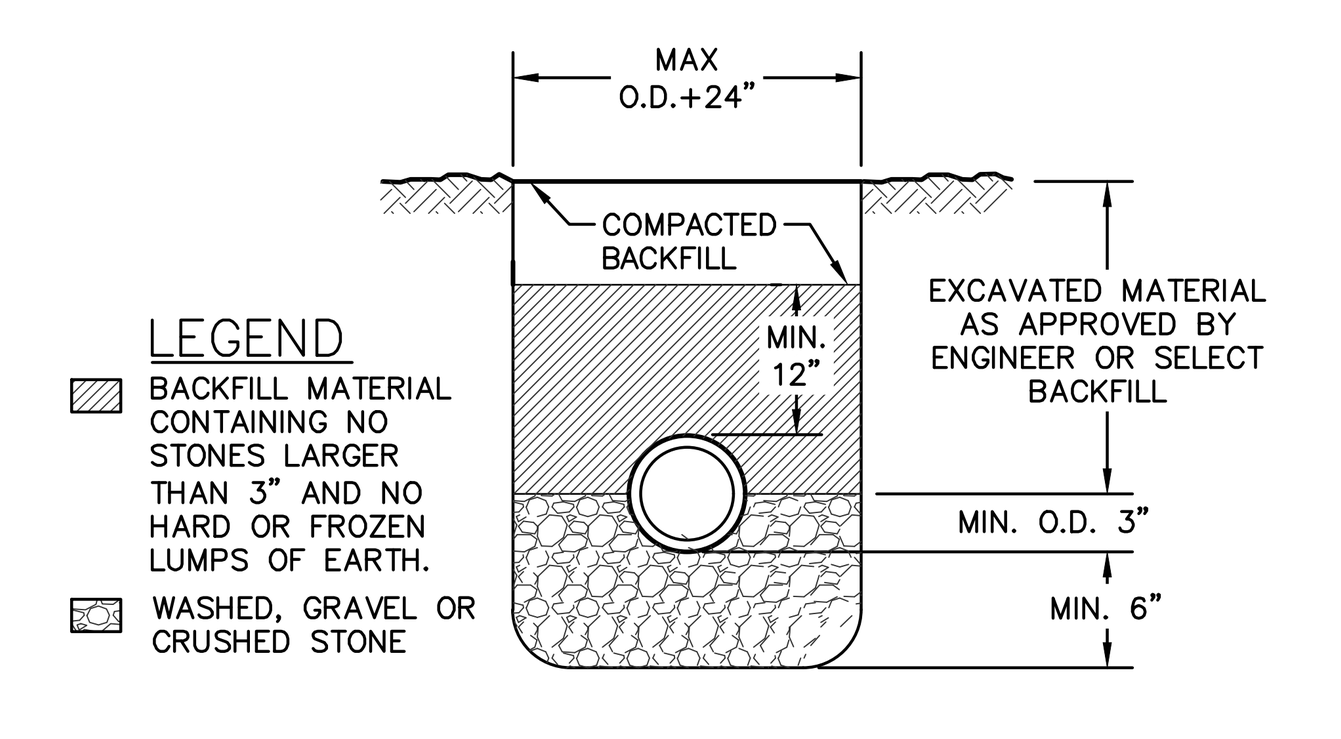

STORM & SANITARY SEWER BEDDING

N.T.S.

JSD
CREATE THE VISION TELL THE STORY
jsdinc.com
MADISON REGIONAL OFFICE
507 WEST VERONA AVE, SUITE 500
VERONA, WISCONSIN 53593
P. 608.848.5060

CLIENT:
SEA DESIGN

CLIENT ADDRESS:
N3302 SOUTH OAKLAND ROAD
TOWN OF OAKLAND, WI 53538

PROJECT:
139 WEST WILSON ST REDEVELOPMENT

PROJECT LOCATION:
139 WEST WILSON ST
MADISON, WI 53703

PLAN MODIFICATIONS:

#	Date:	Description:
1	06.26.2023	LAND USE / UDC SUBMITTAL
2	10.20.2023	UDC RE-SUBMITTAL
3	12.11.2023	LAND USE / UDC RE-SUBMITTAL
4		
5		
6		
7		
8		
9		
10		
11		
12		
13		
14		
15		

Designed By: MAS
Reviewed By: KJY
Approved By:

SHEET TITLE:
DETAILS

SHEET NUMBER:
C5.0

JSD PROJECT NO: 22-11487

THESE PLANS AND DESIGNS ARE COPYRIGHT PROTECTED AND MAY NOT BE USED IN WHOLE OR IN PART WITHOUT THE WRITTEN CONSENT OF JSD PROFESSIONAL SERVICES, INC.

File: I:\2022\2211487\DWG\Civil Sheets\2211487 - Con Docs.dwg Layout: C5.0 DETAILS User: mammel Plotted: Dec 05, 2023 - 9:24am Xref's:

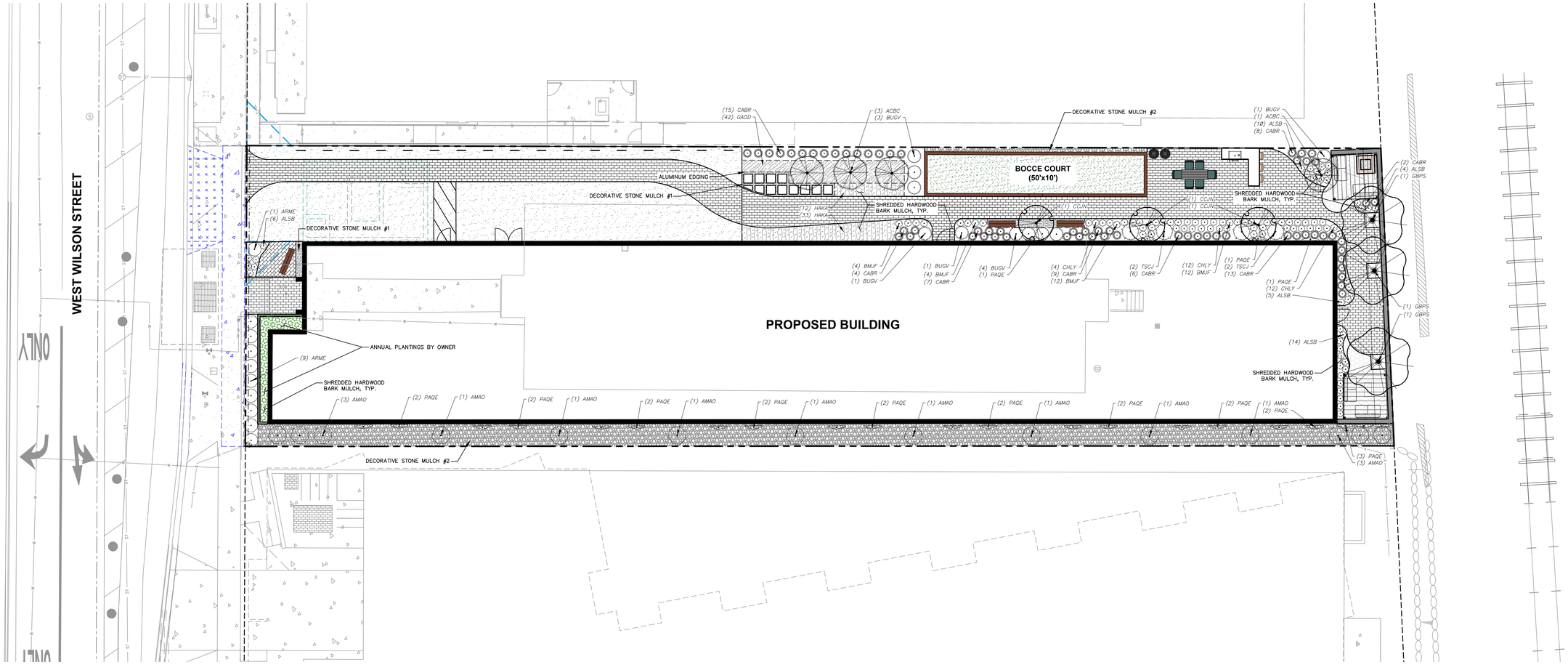

PLANT SCHEDULE

DECIDUOUS TREES	CODE	BOTANICAL / COMMON NAME	CONT	SIZE	QTY
	ACBC	*Acer saccharum 'Barrett Cole' TM* *Apollo Sugar Maple*	B & B	2.5"Cal	4
	CCJN	*Carpinus caroliniana 'J.N. Upright' TM* *Firespire American Hornbeam*	B & B	2.5"Cal	3
	GBPS	*Ginkgo biloba 'Princeton Sentry'* *Princeton Sentry Maidenhair Tree*	B & B	2.5"Cal	3
DECIDUOUS SHRUBS	**CODE**	**BOTANICAL / COMMON NAME**	**CONT**	**SIZE**	**QTY**
	AMAO	*Amelanchier alnifolia 'Obelisk' TM* *Standing Ovation Serviceberry*	B & B	Min. 5' tall	14
	ARME	*Aronia melanocarpa 'UCONNAM165' TM* *Low Scape Mound Chokeberry*	#3	Min. 18"–18"	10
EVERGREEN SHRUBS	**CODE**	**BOTANICAL / COMMON NAME**	**CONT**	**SIZE**	**QTY**
	BUGV	*Buxus x 'Green Velvet'* *Green Velvet Boxwood*	#3	Min. 12"–24"	10
	TSCJ	*Tsuga canadensis 'Jeddeloh'* *Jeddeloh Eastern Hemlock*	#5	Min. 12"–24"	4
PERENNIALS & GRASSES	**CODE**	**BOTANICAL / COMMON NAME**	**CONT**	**SIZE**	**QTY**
	ALSB	*Allium x 'Summer Beauty'* *Summer Beauty Allium*	#1	Min. 8"–18"	39
	BMJF	*Brunnera macrophylla 'Jack Frost' TM* *Jack Frost Siberian Bugloss*	#1	Min 8"–18"	32
	CABR	*Calamagrostis brachytricha* *Korean Feather Reed Grass*	#1	Min 8"–18"	62
	CHLY	*Chelone lyonii 'Armitpp02' TM* *Tiny Tortuga Pink Turtlehead*	#1	Min 8"–18"	28
	PAQE	*Parthenocissus quinquefolia engelmannii* *Engelmann Virginia Creeper*	#1	Min. 24"–36"	25
GROUND COVERS	**CODE**	**BOTANICAL / COMMON NAME**	**SPACING**	**QTY**	
	GAOD	*Galium odoratum* *Sweet Woodruff*	24" o.c.	42	
	HAKA	*Hakonechloa macra 'Aureola'* *Golden Variegated Forest Grass*	24" o.c.	45	

LEGEND

- PROPERTY LINE
- RIGHT-OF-WAY
- EASEMENT LINE
- BUILDING OUTLINE
- BUILDING OVERHANG
- EDGE OF PAVEMENT
- STANDARD CURB AND GUTTER
- CONCRETE PAVEMENT
- ANNUAL PLANTINGS BY OWNER
- DECORATIVE STONE MULCH
- RETAINING WALL
- TREE UPLIGHTING
- BIKE RACK
- ALUMINUM EDGING

GENERAL NOTES

1. REFER TO THE EXISTING CONDITIONS SURVEY FOR EXISTING CONDITIONS NOTES AND LEGEND.
2. ALL WORK IN THE ROW SHALL BE IN ACCORDANCE WITH THE MUNICIPAL STANDARD SPECIFICATIONS FOR PUBLIC WORKS CONSTRUCTION.
3. JSD SHALL BE HELD HARMLESS AND DOES NOT WARRANT ANY DEVIATIONS BY THE OWNER/CONTRACTOR FROM THE APPROVED CONSTRUCTION PLANS THAT MAY RESULT IN DISCIPLINARY ACTIONS BY ANY OR ALL REGULATORY AGENCIES.
4. DRAWING FOR REVIEW – NOT FOR CONSTRUCTION UNLESS OTHERWISE NOTED IN THE TITLE BLOCK.
5. THE LANDSCAPE CONTRACTOR SHALL COORDINATE ALL FINE GRADING AND TOPSOILING WITH GENERAL CONTRACTOR
6. REFER TO "LANDSCAPE DETAILS AND NOTES" SHEET FOR ADDITIONAL DETAILS, NOTES AND SPECIFICATION INFORMATION INCLUDING MATERIALS, GUARANTEE AND EXECUTION RELATED TO LANDSCAPE PLAN
7. CONTRACTOR SHALL REVIEW SITE CONDITIONS FOR UTILITY CONFLICTS, DRAINAGE ISSUES, SUBSURFACE ROCK, AND PLANT PLACEMENT CONFLICTS PRIOR TO PLANT INSTALLATION. REPORT ANY CONDITIONS THAT MAY HAVE ADVERSE IMPACT ON PLANTING OPERATIONS TO LANDSCAPE ARCHITECT
8. DO NOT COMMENCE PLANTING OPERATIONS UNTIL ALL ADJACENT SITE IMPROVEMENTS, IRRIGATION INSTALLATION (IF APPLICABLE), AND FINISH GRADING ARE COMPLETE

north

SCALE IN FEET

10' 0 10'

DIGGERS HOTLINE
Toll Free (800) 242-8511

JSD
CREATE THE VISION TELL THE STORY
jsdinc.com
MADISON REGIONAL OFFICE
507 WEST VERONA AVE, SUITE 500
VERONA, WISCONSIN 53593
P. 608.848.5060

CLIENT:
SEA DESIGN

CLIENT ADDRESS:
N3302 SOUTH OAKLAND ROAD
TOWN OF OAKLAND, WI 53538

PROJECT:
139 WEST WILSON ST
REDEVELOPMENT

PROJECT LOCATION:
139 WEST WILSON ST
MADISON, WI 53703

PLAN MODIFICATIONS:

#	Date:	Description:
1	06.26.2023	LAND USE / UDC SUBMITTAL
2	10.20.2023	UDC RE-SUBMITTAL
3	12.11.2023	LAND USE / UDC RE-SUBMITTAL
4		
5		
6		
7		
8		
9		
10		
11		
12		
13		
14		
15		

Designed By: MRA
Reviewed By: KJY
Approved By:

SHEET TITLE:
LANDSCAPE PLAN

SHEET NUMBER:
L1.0

JSD PROJECT NO: 22-11487

THESE PLANS AND DESIGNS ARE COPYRIGHT PROTECTED AND MAY NOT BE USED IN WHOLE OR IN PART WITHOUT THE WRITTEN CONSENT OF JSD PROFESSIONAL SERVICES, INC.

File: I:\2022\22-11487\DWG\Landscape Sheets\22-11487 - Landscape.dwg Layout: L1.0 User: mammel Plotted: Dec 06, 2023 - 9:21am Xrefs:

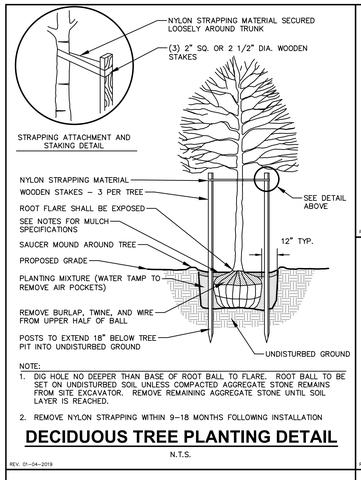

NOTE:
1. DIG HOLE NO DEEPER THAN BASE OF ROOT BALL TO FLARE. ROOT BALL TO BE SET ON UNDISTURBED SOIL UNLESS COMPACTED AGGREGATE STONE REMAINS FROM SITE EXCAVATOR. REMOVE REMAINING AGGREGATE STONE UNTIL SOIL LAYER IS REACHED.
2. REMOVE NYLON STRAPPING WITHIN 9–18 MONTHS FOLLOWING INSTALLATION

DECIDUOUS TREE PLANTING DETAIL

N.T.S.

REV. 01-04-2019

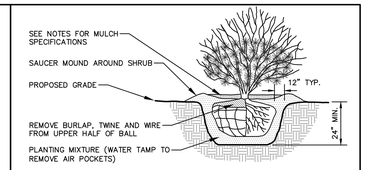

NOTE:
1. ROOT FLARE TO BE EXPOSED.

SHRUB PLANTING DETAIL

N.T.S.

REV. 01-03-2019

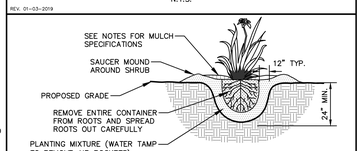

NOTE:
1. ROOT FLARE TO BE EXPOSED

PERENNIAL/ORNAMENTAL GRASS PLANTING DETAIL

N.T.S.

REV. 01-03-2019

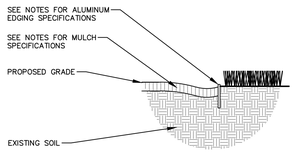

ALUMINUM LANDSCAPE EDGING DETAIL

N.T.S.

REV. 01-03-2019

LANDSCAPE CALCULATIONS AND DISTRIBUTIONS

Required landscaped areas shall be calculated based upon the total developed area of the property. Developed area is defined as that area within a single contiguous boundary which is made up of structures, parking, driveways and docking/loading facilities, but excluding the area of any building footprint at grade, land designated for open space uses such as athletic fields, and undeveloped land area on the same zoning lot. There are three methods for calculating landscape points depending on the size of the lot and Zoning District.

(A) For all lots except those described in (B) and (C) below, five (5) landscape points shall be provided for each three hundred (300) square feet of developed area.

Total square footage of developed area: 4,801

Total landscape points required: 16

(B) For lots larger than five (5) acres, points shall be provided at five (5) points per three hundred (300) square feet for the first Five (5) developed acres, and one (1) point per one hundred (100) square feet for all additional acres.

Total square footage of developed area: _____

Five (5) acres = _____

First five (5) developed acres = _____

Remainder of developed area: _____

Total landscape points required _____

(C) For the Industrial – Limited (IL) and Industrial – General (IG) districts, one (1) point shall be provided per one hundred (100) square feet of developed area.

Total square footage of developed area: _____

Total landscape points required: _____

TABULATION OF LANDSCAPE CREDITS AND POINTS

			CREDITS / EXISTING LANDSCAPING		NEW / PROPOSED LANDSCAPING	
PLANT TYPE/ELEMENT	MINIMUM INSTALLATION SIZE	POINTS	QUANTITY	POINTS ACHIEVED	QUANTITY	POINTS ACHIEVED
OVERSTORY DECIDUOUS TREE	2.5" CAL MIN.	35	0	0	3	105
TALL EVERGREEN TREE	5-6' TALL MIN.	35	0	0	0	0
ORNAMENTAL TREE	1.5" CAL MIN.	15	0	0	7	105
UPRIGHT EVERGREEN SHRUB	3-4' TALL, MIN.	10	0	0	0	0
SHRUB, DECIDUOUS	#3 CONT., MIN. 12"-24"	3	0	0	24	72
SHRUB, EVERGREEN	#3 CONT., MIN. 12"-24"	4	0	0	14	56
ORNAMENTAL GRASS & PERENNIAL	#1 CONT., MIN. 8"-18"	2	0	0	186	372
ORNAMENTAL / DECORATIVE FENCING OR WALL	4 POINTS / 10 LF	.4	0	0	0	0
EXISTING SIGNIFICANT SPECIMAN TREE	14 POINTS / CAL. (MAXIMUM 200 POINTS PER TREE)	14	0	0	0	0
LANDSCAPE FURNITURE	5 POINTS PER SEAT (WITHIN PUBLICALLY ACCESSIBLE DEVELOPED AREA. CANNOT COMPRISE MORE THAN 5% OF TOTAL REQUIRED POINTS)	5	0	0	0	0
	SUBTOTAL			0		710
	TOTAL NUMBER OF POINTS PROVIDED			710		

GENERAL NOTES

1. GENERAL: ALL WORK IN THE R–O–W AND PUBLIC EASEMENTS SHALL BE IN ACCORDANCE WITH LOCAL MUNICIPAL REQUIREMENTS. JSD SHALL BE HELD HARMLESS AND DOES NOT WARRANT ANY DEVIATIONS BY THE OWNER/CONTRACTOR FROM THE APPROVED CONSTRUCTION PLANS THAT MAY RESULT IN DISCIPLINARY ACTIONS BY ANY OR ALL REGULATORY AGENCIES. LOCATE ALL UTILITIES PRIOR TO CONSTRUCTION. THE CONTRACTOR IS RESPONSIBLE FOR REPAIRING ANY DAMAGE DONE TO UTILITIES. CONTRACTOR MUST CALL 1–800–242–8511 FOR UTILITY LOCATIONS AT LEAST THREE DAYS PRIOR TO DIGGING. HAND DIG AND INSTALL ALL PLANTS THAT ARE NEAR EXISTING UTILITIES. PROTECT PREVIOUSLY INSTALLED WORK OF OTHER TRADES. CONTRACTOR IS RESPONSIBLE FOR STAKING THE PLANT MATERIALS FOR REVIEW BY OWNER PRIOR TO DIGGING AND PLACEMENT AND SHALL COORDINATE ALL FINE GRADING AND RESTORATION WITH THE GRADING CONTRACTOR.
2. DELIVERY AND HANDLING: DO NOT DELIVER MORE PLANT MATERIALS THAN CAN BE PLANTED IN ONE DAY, UNLESS ADEQUATE, APPROPRIATE AND SECURE STORAGE IS PROVIDED AND APPROVED BY OWNER'S REPRESENTATIVE. AT ALL TIMES, PROTECT ALL PLANT MATERIALS FROM WIND AND DIRECT SUN. DELIVER PLANTS WITH LEGIBLE IDENTIFICATION LABELS. PROTECT PLANTS DURING DELIVERY AND DO NOT PRUNE PRIOR TO DELIVERY. ALL TREES AND SHRUBS SHALL BE PLANTED ON THE DAY OF DELIVERY; IF THIS IS NOT POSSIBLE, PROTECT THE PLANT MATERIALS NOT PLANTED BY STORING THEM IN A SHADED, SECURE AREA. PROTECTING THE ROOT MASS WITH WET SOIL, MULCH, HAY OR OTHER SUITABLE MEDIUM. CONTRACTOR TO KEEP ALL PLANT MATERIALS ADEQUATELY WATERED TO PREVENT ROOT DESICCATION. DO NOT REMOVE CONTAINER GROWN STOCK FROM CONTAINERS BEFORE TIME OF PLANTING. DO NOT PICK UP CONTAINER OR BALLED PLANTS BY STEM OR ROOTS. ALL PLANTS SHALL BE LIFTED AND HANDLED FROM THE BOTTOM OF THE CONTAINER OR BALL. PERFORM ACTUAL PLANTING ONLY WHEN WEATHER AND SOIL CONDITIONS ARE SUITABLE IN ACCORDANCE WITH LOCALLY ACCEPTED BEST HORTICULTURAL PRACTICES.
3. MATERIALS – PLANTS: ALL PLANTS SHALL CONFORM TO THE LATEST VERSION OF THE AMERICAN STANDARD FOR NURSERY STOCK ANSI Z60.1. PLANTS SHALL BE TRUE TO SPECIES AND VARIETY SPECIFIED AND NURSERY GROWN IN ACCORDANCE WITH GOOD HORTICULTURAL PRACTICES UNDER CLIMATIC CONDITIONS SIMILAR TO THOSE IN THE LOCALITY OF THE PROJECT FOR AT LEAST 2 YEARS. PLANTS SHALL BE FRESHLY DUG (DURING THE MOST RECENT FAVORABLE HARVEST SEASON). PLANTS SHALL BE SO TRAINED IN DEVELOPMENT AND APPEARANCE AS TO BE UNQUESTIONABLY SUPERIOR IN FORM, COMPACTNESS, AND SYMMETRY. PLANTS SHALL BE SOUND, HEALTHY, VIGOROUS, WELL BRANCHED AND BUDSELF FOLIATED WHEN IN LEAF, AND FREE OF DISEASE AND INSECTS (ADULT EGGS, PUPAE OR LARVAE). THEY SHALL HAVE HEALTHY, WELL–DEVELOPED ROOT SYSTEMS AND SHALL BE FREE FROM PHYSICAL DAMAGE OR OTHER CONDITIONS THAT WOULD PREVENT THRIVING GROWTH OR PREMATURE MORTALITY. PLANTS SHALL BE OF THE HIGHEST QUALITY, POSSESS TYPICAL GROWTH HABITS AND FORM FOR THEIR SPECIES AND BE FREE OF INJURY. PARKWAY TREES AND PARKING LOT TREES SHALL HAVE A MINIMUM BRANCHING HEIGHT OF SIX (6) FEET ABOVE THE GROUND TO ALLOW ADEQUATE VISUAL AND PHYSICAL CLEARANCE.
4. PRUNING: THE CONTRACTOR SHALL PRUNE ALL TREES AND REPAIR ANY INJURIES THAT OCCURRED DURING THE PLANTING PROCESS. DOUBLE LEADERS, DEAD BRANCHES, AND LIMBS DAMAGED OR BROKEN DURING THE PLANTING PROCESS, SHALL BE PRUNED. THIS SHALL BE THE ONLY PRUNING ALLOWED AT PLANTING. PRUNING SHALL CONFORM TO THE LATEST VERSION OF THE AMERICAN STANDARD FOR TREE CARE OPERATIONS, ANSI A300. PRUNE TREES IN ACCORDANCE WITH NAA GUIDELINES. DO NOT TOP TREES. PRUNE SHRUBS ACCORDING TO STANDARD HORTICULTURAL PRACTICES. ON CUTS OVER 3/4" IN DIAMETER AND BRUISES OR SCARS ON BARK, TRACE THE INJURED CAMBIUM LAYER BACK TO LIVING TISSUE AND REMOVE. SMOOTH AND SHAPE WOUNDS SO AS NOT TO RETAIN WATER. TREAT THE AREA WITH AN APPROVED INCONSPICUOUS LATEX BASED ANTISEPTIC TREE PAINT, IF PRUNING OCCURS "IN SEASON". DO NOT PRUNE ANY OAK TREES DURING THE MONTHS FROM APRIL TO OCTOBER.
5. CLEANUP: THE WORK AREA SHALL BE KEPT SAFE AND NEAT AT ALL TIMES. DISPOSED OF EXCESS SOIL. REMOVE ALL CUTTINGS AND WASTE MATERIALS. SOIL AND BRANCHES, BIND AND WRAP THESE MATERIALS. ANY REJECTED PLANTS, AND ANY OTHER DEBRIS RESULTING FROM ALL PLANTING TASKS AND PROMPTLY CLEAN UP AND REMOVE FROM THE PROJECT SITE. UNDER NO CIRCUMSTANCES SHALL THE ACCUMULATION OF SOIL, BRANCHES OR OTHER DEBRIS BE ALLOWED UPON A PUBLIC PROPERTY IN SUCH A MANNER AS TO RESULT IN A PUBLIC SAFETY HAZARD OR DAMAGE. LIKEWISE, UNDER NO CIRCUMSTANCES SHALL ANY DEBRIS OR INCIDENTAL MATERIALS BE ALLOWED UPON ADJACENT PRIVATE PROPERTY.
6. ANY SUBSTITUTIONS IN PLANT TYPE, LOCATION, OR SIZE SHALL BE APPROVED BY LANDSCAPE ARCHITECT PRIOR TO INSTALLATION.
7. CONTRACTOR TO VERIFY PLANT MATERIAL QUANTITIES AND SQUARE FOOTAGES. QUANTITIES SHOWN ON PLAN TAKE PRECEDENCE OVER THOSE ON SCHEDULE.

LANDSCAPE MATERIAL NOTES

1. MATERIALS – PLANTING MIXTURE: ALL HOLES EXCAVATED FOR TREES, SHRUBS, PERENNIALS AND ORNAMENTAL GRASSES SHALL BE BACKFILLED WITH TWO (2) PARTS TOPSOIL, ONE (1) PART SAND AND ONE (1) PART COMPOST. SOIL MIXTURE SHALL BE WELL BLENDED PRIOR TO INSTALLATION.
2. MATERIALS – TOPSOIL: TOPSOIL TO BE CLEAN, FRIABLE LOAM FROM A LOCAL SOURCE, FREE FROM STONES OR DEBRIS OVER 3/4" IN DIAMETER, AND FREE FROM TOXINS OR OTHER DELETERIOUS MATERIALS. TOPSOIL SHALL HAVE A pH VALUE BETWEEN 6 AND 7. TOPSOIL AND PLANTING SOIL SHALL BE TESTED TO ENSURE CONFORMANCE WITH THESE SPECIFICATIONS AND SHALL BE AMENDED TO MEET THESE SPECIFICATIONS. PROVIDE TEST RESULTS TO OWNER'S REPRESENTATIVE PRIOR TO PLACEMENT. DO NOT PLACE FROZEN OR MUDDY TOPSOIL. APPLY SOIL AMENDMENTS TO ALL LANDSCAPE AREAS PER SOIL TEST.
3. MATERIALS – SHREDDED HARDWOOD BARK MULCH: ALL PLANTING AREAS LABELED ON PLAN SHALL RECEIVE CERTIFIED WEED FREE SHREDDED HARDWOOD BARK MULCH INSTALLED TO A MINIMUM AND CONSISTENT DEPTH OF 3–INCHES. SHREDDED HARDWOOD BARK MULCH SIZE & COLOR TO BE APPROVED BY OWNER'S REPRESENTATIVE PRIOR TO INSTALLATION. FERTILIZER SHALL BE IN ACCORDANCE WITH APPLICABLE LOCAL, COUNTY AND STATE REQUIREMENTS. SHREDDED HARDWOOD BARK MULCH AREAS SHALL NOT RECEIVE WOVEN WEED BARRIER FABRIC.
4. MATERIALS – STONE MULCH #1: ALL PLANTING AREAS LABELED ON PLAN SHALL RECEIVE 3" BLUE GRANITE DECORATIVE STONE MULCH SPREAD TO A MINIMUM AND CONSISTENT DEPTH OF 3–INCHES. FERTILIZER SHALL BE IN ACCORDANCE WITH APPLICABLE LOCAL, COUNTY AND STATE REQUIREMENTS. STONE MULCH AREAS SHALL RECEIVE WOVEN WEED BARRIER FABRIC. NO PLASTIC/IMPERVIOUS BARRIERS WILL BE PERMITTED. EXAMPLE: BLACK VISQUEEN.
5. MATERIALS – STONE MULCH #2: ALL PLANTING AREAS LABELED ON PLAN SHALL RECEIVE 1.5" BLUE GRANITE DECORATIVE STONE MULCH SPREAD TO A MINIMUM AND CONSISTENT DEPTH OF 3–INCHES. FERTILIZER SHALL BE IN ACCORDANCE WITH APPLICABLE LOCAL, COUNTY AND STATE REQUIREMENTS. STONE MULCH AREAS SHALL RECEIVE WOVEN WEED BARRIER FABRIC. NO PLASTIC/IMPERVIOUS BARRIERS WILL BE PERMITTED. EXAMPLE: BLACK VISQUEEN.
6. MATERIALS – TREE & SHRUB RINGS: ALL TREES AND/OR SHRUBS PLANTED IN SEEDED LAWN AREAS TO BE INSTALLED WITH A MINIMUM 4' DIAMETER SHREDDED HARDWOOD BARK MULCH TREE RING SPREAD TO A CONSISTENT DEPTH OF 3–INCHES. ALL TREE RINGS SHOULD BE INSTALLED WITH A 5" DEPTH SHOVEL CUT EDGE, ANGLED 45 DEGREES INTO SOIL AT A 5' DIAMETER ABOUT THE CENTER OF THE TREE PLANTING. A PRE–EMERGENT GRANULAR HERBICIDE WEED–PREVENTER SHOULD BE MIXED WITH MULCH USED TO INSTALL TREE RING AS WELL AS TOPICALLY APPLIED TO COMPLETED INSTALLATION OF TREE RING.
7. MATERIALS – ALUMINUM EDGING: EDGING SHALL BE 1/8" X 4", ALUMINUM EDGING, MILL FINISH. OWNER'S REPRESENTATIVE SHALL APPROVE PRODUCT SPECIFICATION PROVIDED BY LANDSCAPE CONTRACTOR.

CONTRACTOR AND OWNER RESPONSIBILITY NOTES

1. GUARANTEE: THE CONTRACTOR SHALL GUARANTEE ALL PLANTS THROUGH ONE (1) YEAR AFTER ACCEPTANCE BY THE OWNER'S REPRESENTATIVE. PLANTS SHALL BE ALIVE AND IN HEALTHY AND FLOURISHING CONDITION AT THE END OF THE GUARANTEE PERIOD. THE CONTRACTOR SHALL REPLACE (AT NO COST TO OWNER) ANY PLANTS THAT ARE DEAD OR NOT IN A VIGOROUS THRIVING CONDITION. REPLACEMENT PLANTS SHALL BE OF THE SAME KIND AND SIZE AS ORIGINALLY SPECIFIED UNLESS OTHERWISE DIRECTED BY OWNER'S REPRESENTATIVE. RESTORE BEDS AS NECESSARY FOLLOWING PLANT REPLACEMENT, INCLUDING BUT NOT LIMITED TO BEDDING, EDGING, MULCH, ETC. REPLACE PLANTS DAMAGED AT TIME OF PLANTING. REPAIR AREAS DISTURBED IN ANY WAY DURING PLANT REPLACEMENT AT NO COST TO OWNER. CONTRACTOR SHALL PROVIDE A ONE (1)–YEAR STRAIGHTENING GUARANTEE FOR ALL TREES.
2. CONTRACTOR IS RESPONSIBLE FOR STAKING THE PLANT MATERIALS FOR REVIEW BY OWNER'S REPRESENTATIVE PRIOR TO DIGGING AND PLACEMENT AND SHALL COORDINATE ALL FINE GRADING AND RESTORATION WITH THE GRADING CONTRACTOR.
3. MAINTENANCE: (CONTRACTOR) FOR ALL PLANTINGS, SEEDED AND/OR SODDED LAWN AREAS: THE CONTRACTOR SHALL MAINTAIN ALL PLANTINGS AND LAWN AREAS FOR A MINIMUM TIME PERIOD OF 60 DAYS, UNTIL FINAL ACCEPTANCE BY OWNER'S REPRESENTATIVE. THE CONTRACTOR IS RESPONSIBLE FOR ADEQUATELY WATERING PLANTS AND LAWN/TURFGRASS DURING THIS 60 DAY ESTABLISHMENT PERIOD. CONTRACTOR IS RESPONSIBLE FOR THE ESTABLISHMENT OF HEALTHY VIGOROUS PLANT MATERIALS AND LAWN/TURFGRASS GROWTH. CONTRACTOR IS ALSO RESPONSIBLE FOR ANY PRUNING OF PLANT MATERIALS, AND SHAPING AND/OR REPLACEMENT OR SUPPLEMENT OF DEFICIENT SHREDDED HARDWOOD BARK MULCH DURING THIS PERIOD. LONG TERM PLANT MATERIALS AND LAWN/TURFGRASS MAINTENANCE AND ANY PROGRAM FOR SUCH IS THE RESPONSIBILITY OF THE OWNER. ALL PLANTINGS AND LAWN/TURFGRASS AREAS SHALL BE MAINTAINED IN A MANICURED CONDITION UNTIL THE TIME WHEN THE OWNER'S ACCEPTANCE IS GIVEN.
4. MAINTENANCE: (OWNER) THE OWNER IS RESPONSIBLE FOR THE CONTINUED MAINTENANCE, REPAIR AND REPLACEMENT OF ALL LANDSCAPING MATERIALS AND WEED BARRIER FABRIC AS NECESSARY FOLLOWING THE ONE (1) YEAR CONTRACTOR GUARANTEE PERIOD.

DIGGERS HOTLINE
Toll Free (800) 242-8511

JSD
CREATE THE VISION TELL THE STORY
jsdinc.com
MADISON REGIONAL OFFICE
507 WEST VERONA AVE, SUITE 500
VERONA, WISCONSIN 53593
P. 608.848.5060

CLIENT:
SEA DESIGN

CLIENT ADDRESS:
N3302 SOUTH OAKLAND ROAD
TOWN OF OAKLAND, WI 53538

PROJECT:
139 WEST WILSON ST
REDEVELOPMENT

PROJECT LOCATION:
139 WEST WILSON ST
MADISON, WI 53703

PLAN MODIFICATIONS:

#	Date:	Description:
1	06.26.2023	LAND USE / UDC SUBMITTAL
2	10.20.2023	UDC RE-SUBMITTAL
3	12.11.2023	LAND USE / UDC RE-SUBMITTAL
4		
5		
6		
7		
8		
9		
10		
11		
12		
13		
14		
15		

Designed By: MRA
Reviewed By: KJY
Approved By:

SHEET TITLE:
LANDSCAPE DETAILS & NOTES

SHEET NUMBER:
L2.0

JSD PROJECT NO: 22-11487

THESE PLANS AND DESIGNS ARE COPYRIGHT PROTECTED AND MAY NOT BE USED IN WHOLE OR IN PART WITHOUT THE WRITTEN CONSENT OF JSD PROFESSIONAL SERVICES, INC.

File: I:\2022\22-11487\DWG\Landscape Sheets\22-11487 - Landscape.dwg Layout: L2.0 User: mamnet Plotted: Dec 05, 2023 - 9:21am Xref's:

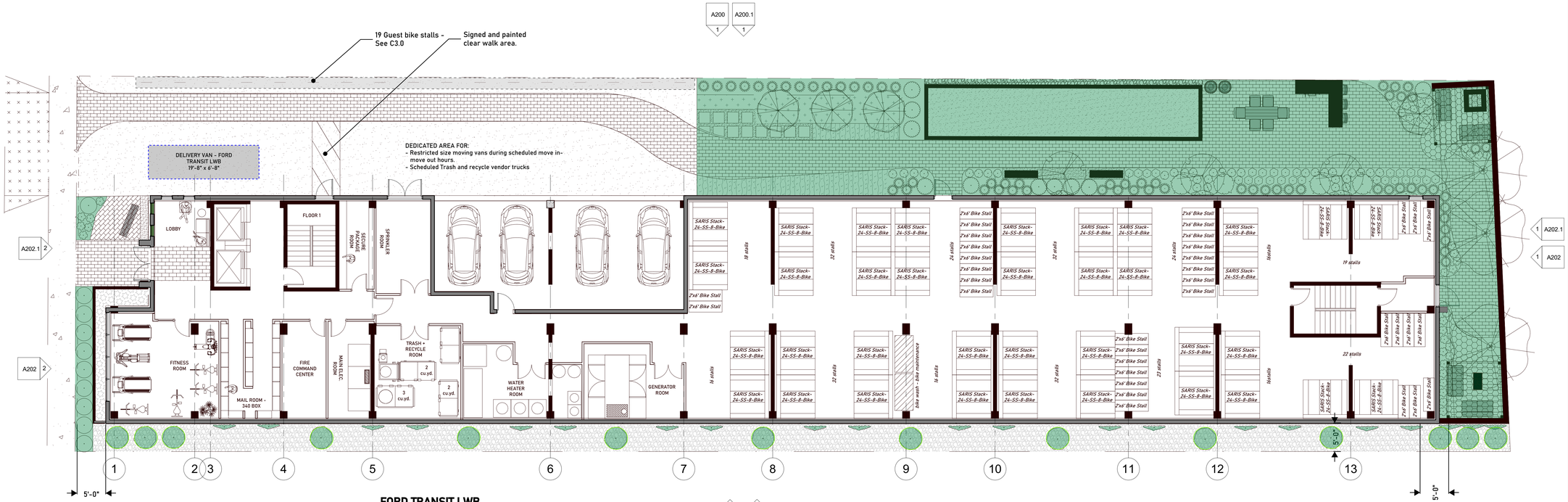

Level 1 -Site
1/8" = 1'-0"

SETBACKS - FULLY NOTED ON SHEET C3.0

5'	FRONT
5'	WEST SIDE
21.5'	EAST SIDE
10'	REAR

FORD TRANSIT LWB

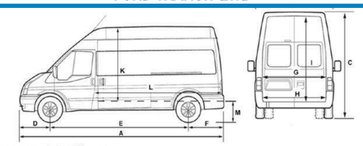

BODY DIMENSIONS[1] — Van

Inches (unless otherwise noted)

Configuration		Low Roof RWB	Med. Roof RWB	Low Roof LWB	Med. Roof LWB	High Roof LWB	High Roof LWB EL (SRW/DRW)
Description							
A	Length	219.9	219.9	237.6	237.6	237.6	266.1
B	Width with mirrors	97.4	97.4	97.4	97.4	97.4	97.4
	Width without mirrors	81.3	81.3	81.3	81.3	81.3	81.3/83.7
C	Height	83.6	100.8	83.2	100.7	110.1	109.4
D	Front Overhang	40.3	40.3	40.3	40.3	40.3	40.3
E	Wheelbase	129.9	129.9	147.6	147.6	147.6	147.6
F	Rear Overhang	49.7	49.7	49.7	49.7	49.7	78.1
G	Rear Cargo Door Opening Width	61.7	61.7	61.7	61.7	61.7	61.7
H	Cargo Width Between Wheelhouse	54.8	54.8	54.8	54.8	54.8	54.8/45.4
I	Rear Cargo Door Opening Height	49.5	64.9	49.5	64.9	74.3	74.3
J	Max. Load Width (excluding wheelhouse)	70.2	70.2	70.2	70.2	70.2	70.2
K	Max. Cargo Height	56.9	72.0	56.9	72.0	81.5	81.5
L	Max. Cargo Length at Floor	126.0	126.0	143.7	143.7	143.7	172.2
M	Load Height (curb)	28.9	28.9	28.7	28.7	28.7	28.0

(1) Preliminary dimensions.

1 A201 1 A201.1

BIKE PARKING SUMMARY

1.) For residents: *(320) enclosed and secure bike parking spaces using 2x6 ground stall and Saris parking stack system.*

2.) For guests: *(19) 2x6 ground stalls.*

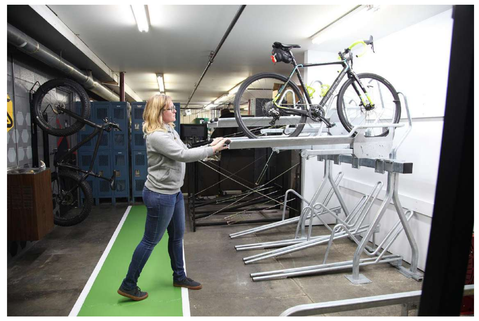

Bike parking stack system by Saris
SARIS 24-SS-8 BIKE



Bike parking stack system by Saris
SARIS 24-SS-8 BIKE

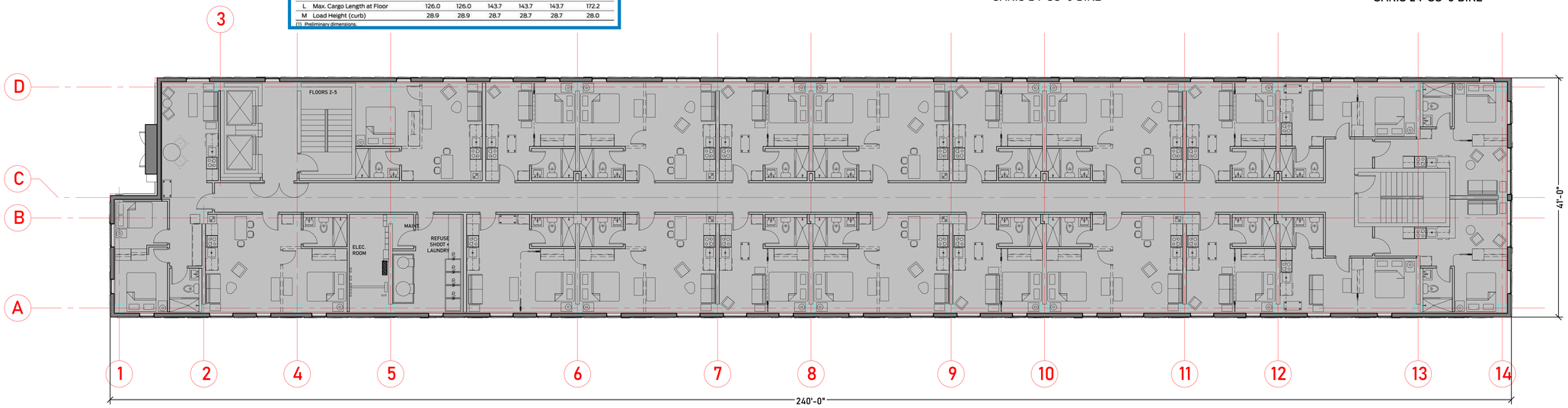

Levels 2-5
1/8" = 1'-0"

SEA Design
N2302 South Oakland Road
Town of Oakland, Wiconsin
53538

progression

139 West Wilson
Madison, Wisconsin

Floor plans 1-5

Revisions:	
UDC	12/11/2023
P.C.	12/11/2023

Project #: 21.000
Issued For: Review
Date: 12/11/2023

A101

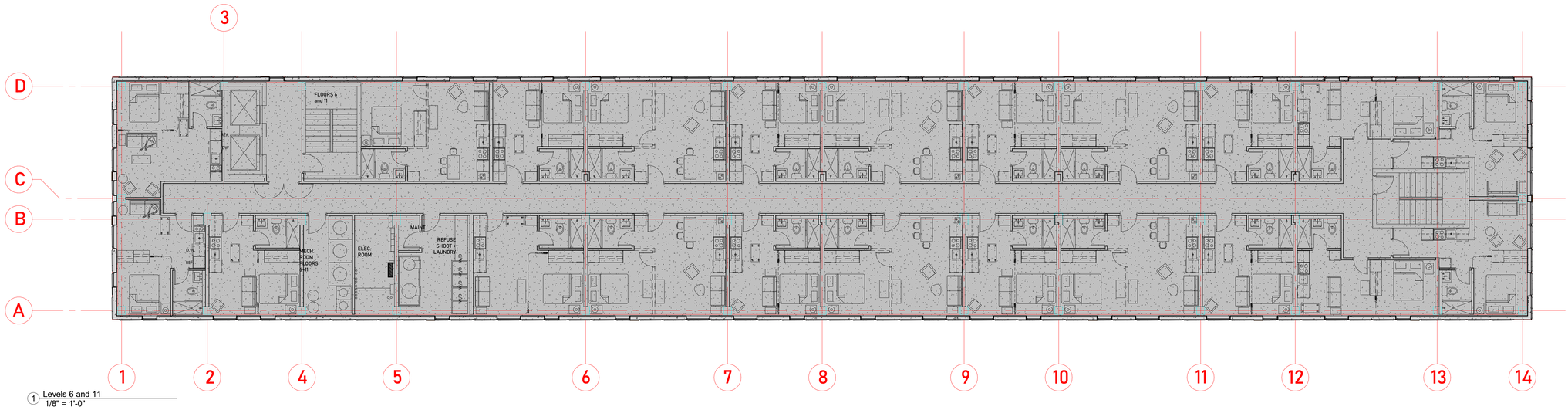

1 Levels 6 and 11
1/8" = 1'-0"

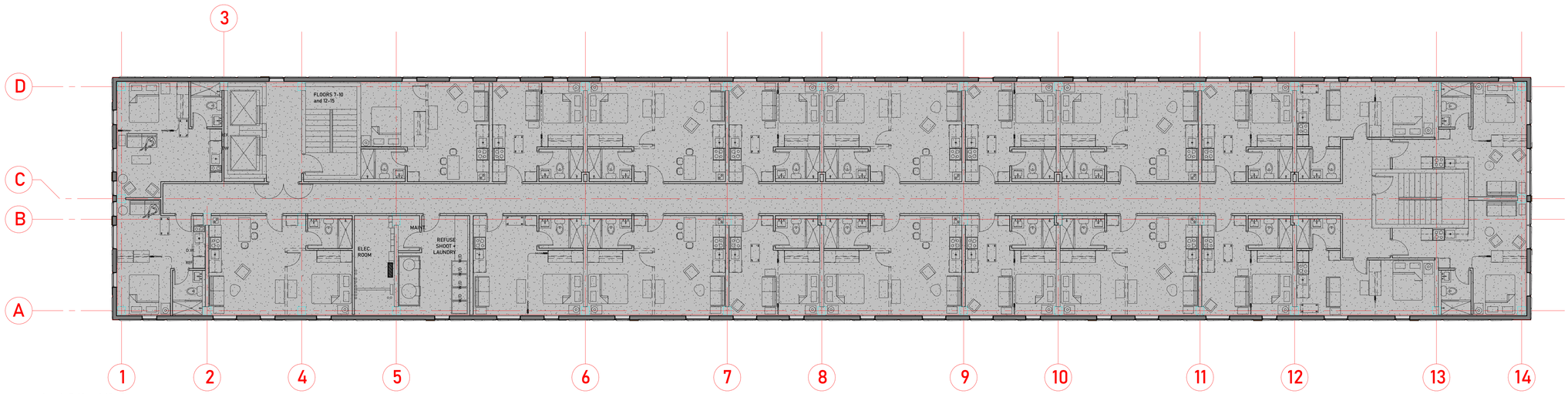

2 Levels 7-10 and 12-15
1/8" = 1'-0"

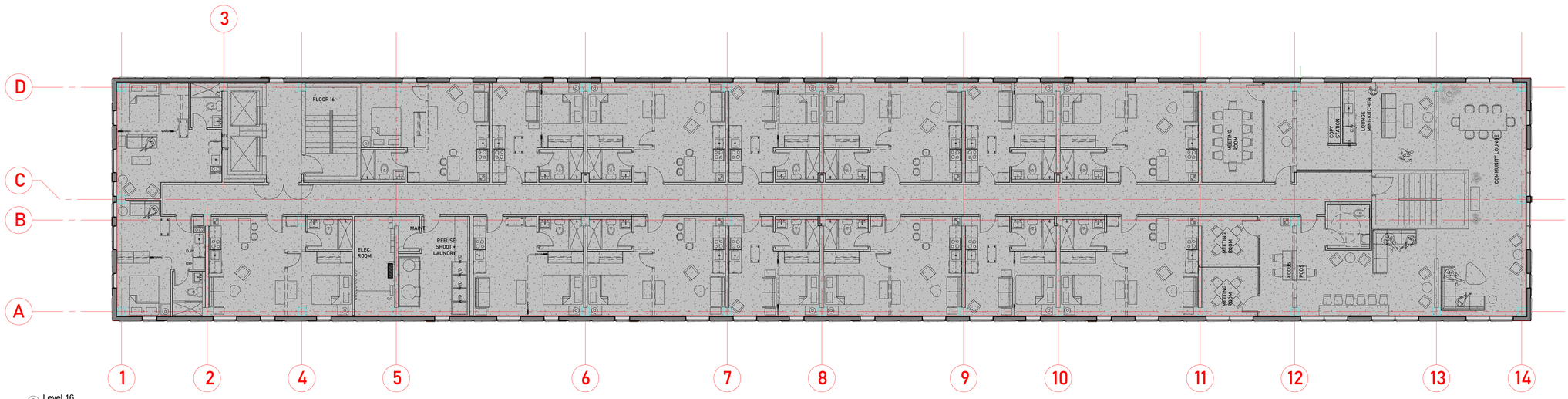

3 Level 16
1/8" = 1'-0"

SEA Design
N2302 South Oakland Road
Town of Oakland, Wiconsin
53538

progressive

139 West Wilson
Madison, Wisconsin

Floor plans 6-16

Revisions:	
UDC	12/11/2023
P.C.	12/11/2023

Project #: 21.000
Issued For: Review
Date: 12/11/2023

A102

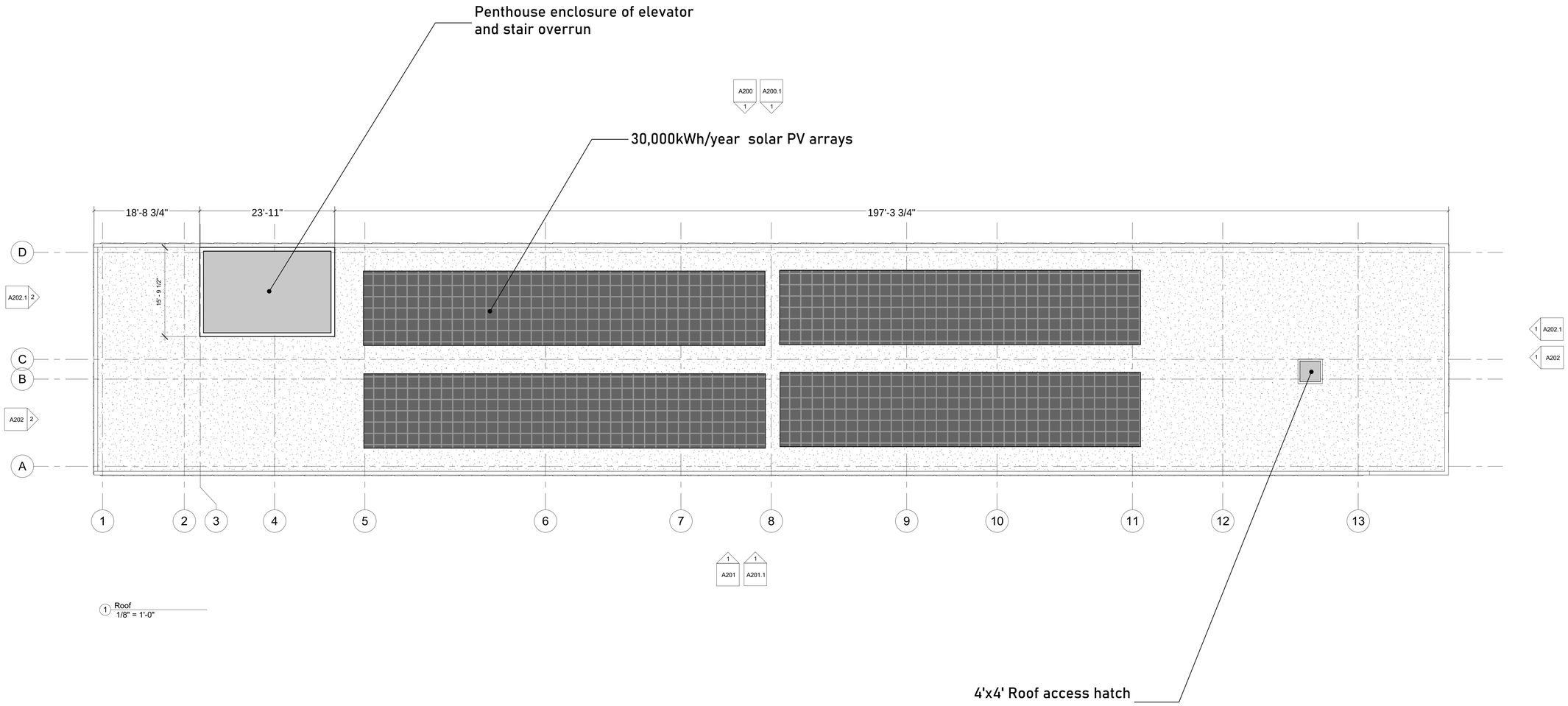

1 Roof
1/8" = 1'-0"

SEA Design
N3302 South Oakland Road
Town of Oakland, Wisconsin
53538

progression

139 West Wilson
Madison, Wisconsin

Roof Plan

Revisions:	
UDC	12/11/2023
P.C.	12/11/2023

Project #: 21.000
Issued For: Review
Date: 12/11/2023

A103

micro C



micro B



micro A



SEA Design
N3302 South Oakland Road
Town of Oakland, Wisconsin
53538

progression

139 West Wilson
Madison, Wisconsin

UNIT PLAN TYPICALS

Revisions:	
UDC	12/11/2023
P.C.	12/11/2023

Project #: 21.000
Issued For: Review
Date: 12/11/2023

A104

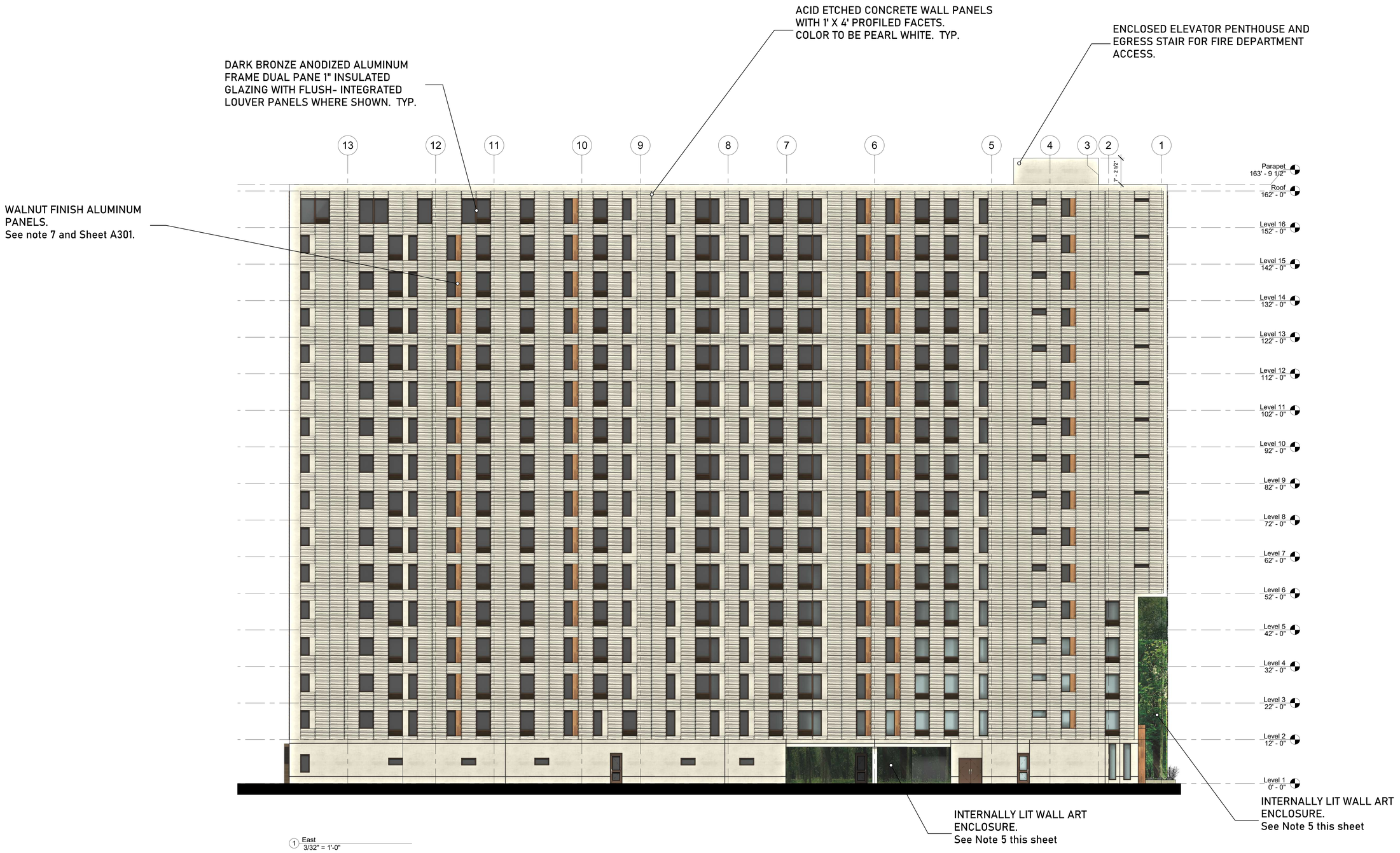

1 East
3/32" = 1'-0"

Acid etched concrete wall panel. Color: PEARL WHITE

GENERAL MATERIAL NOTES:

1.) The glass on all windows and doors shall be slightly tinted to allow views into and out of the interior.
2.) The primary exterior material will be an highly durable acid etched concrete wall panel by Wells Infinite Facades, typically 10' H x 32' W, with a custom faceted profile.
3.) The 1' x 4' faceting will occur on all facades.
4.) The facets incorporate a horizontal and vertical articulation and twist within each unit, creating a pattern and texture change throughout the facade.
5.) Wall art enclosures: See sheets A302; A302.1, and A302 for details. The art images would be color jet printed on 4' x 10 ' Di-bond composite panels, mounted behind a glass curtain wall and internally lit with an LED neon tube. Glass to be 48" w x 120" h 1/4" clear tempered. These would occur in the following locations:
   - Recessed Wilson Street entry condition with a 51 feet tall, L-shaped (10' x 20') wide.
   - The interior walls of the zip car garage to utilize same wall assembly without glass curtain wall.
6.) Aluminum T&G rain-screen panel. 18"W x 84"H. attached directly to wall panel. Wood grain walnut finish. Longboard Architectural products. See details and product sheet on Sheet A301.

SEA Design
N3302 South Oakland Road
Town of Oakland, Wiconsin
53538

progression

139 West Wilson
Madison, Wisconsin

East Elevation

Revisions:	
UDC	12/11/2023
P.C.	12/11/2023
Project #:	21.000
Issued For:	Review
Date:	12/11/2023

A200

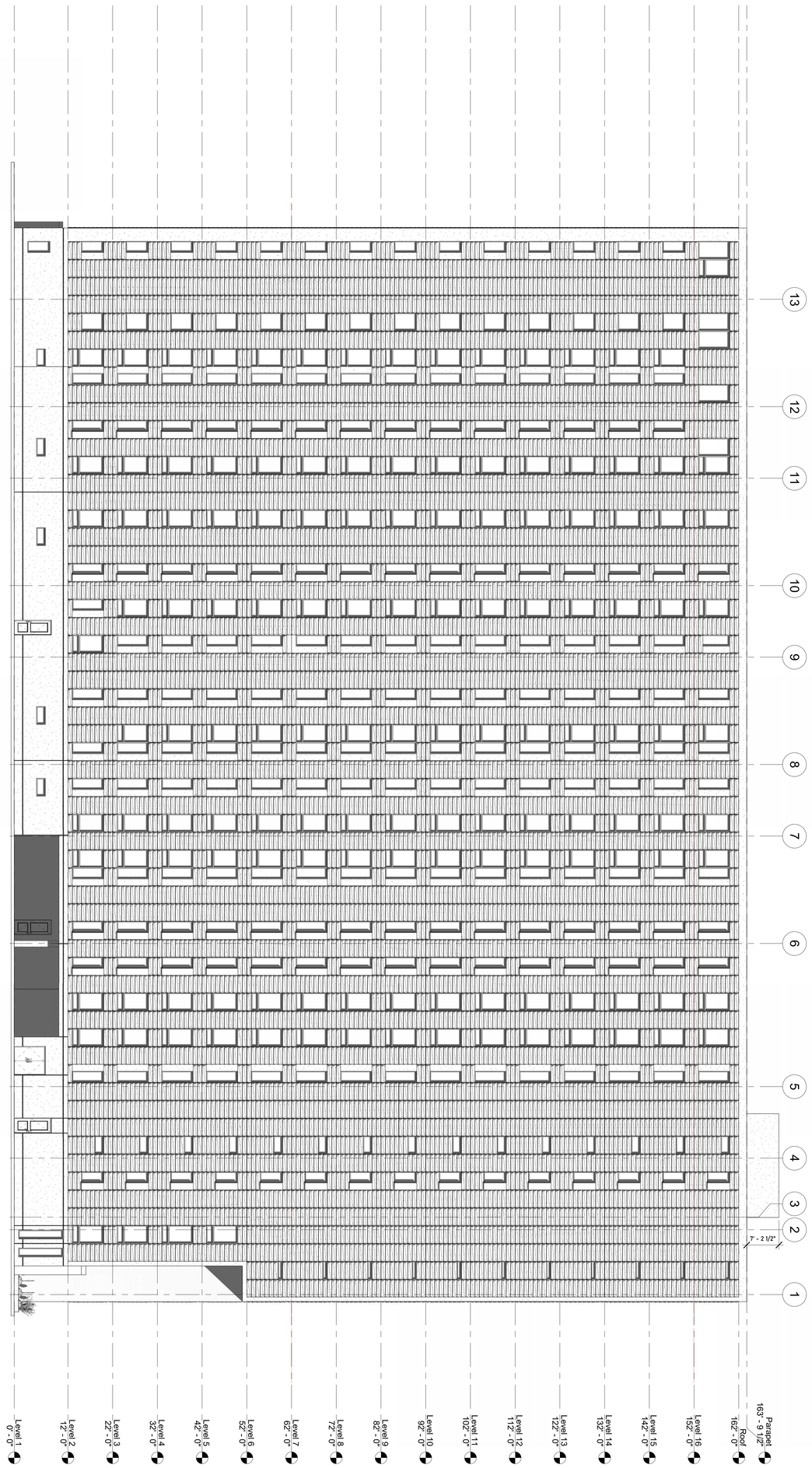

1 East - Black and white
3/32" = 1'-0"

progression

139 West Wilson
Madison, Wisconsin

East Elevation - B&W

SEA Design

N3302 South Oakland Road
Town of Oakland, Wiconsin
53538

Revisions:	
UDC	12/1/2023
P.C.	12/1/2023

Project #: 21000
Issued For: Review
Date: 12/1/2023

A200.1

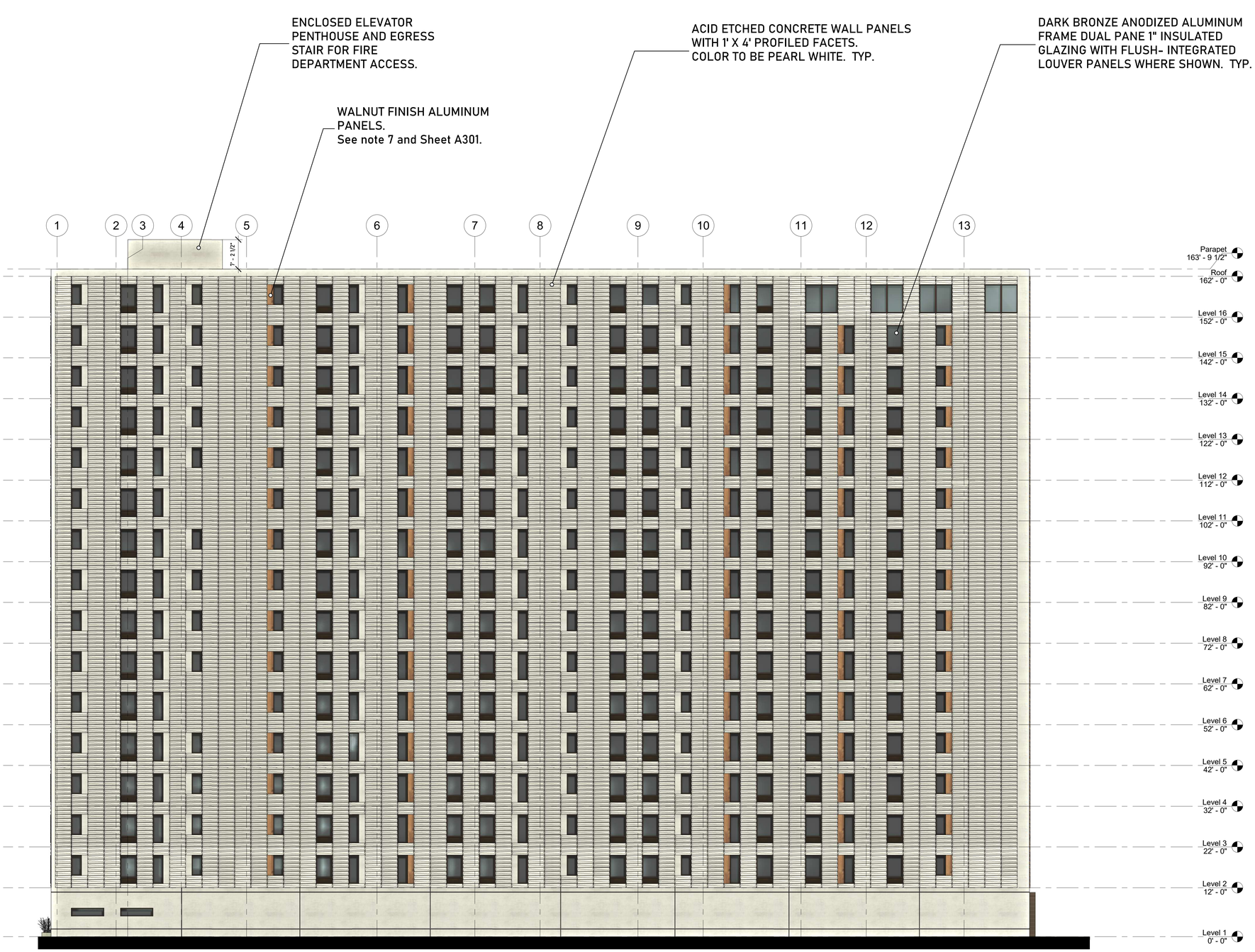

1 West
3/32" = 1'-0"

Acid etched concrete wall panel. Color: PEARL WHITE

GENERAL MATERIAL NOTES:

1.) The glass on all windows and doors shall be slightly tinted to allow views into and out of the interior.
2.) The primary exterior material will be an highly durable acid etched concrete wall panel by Wells Infinite Facades, typically 10' H x 32' W, with a custom faceted profile.
3.) The 1' x 4' faceting will occur on all facades.
4.) The facets incorporate a horizontal and vertical articulation and twist within each unit, creating a pattern and texture change throughout the facade.
5.) Wall art enclosures: See sheets A302; A302.1, and A302 for details. The art images would be color jet printed on 4' x 10 ' Di-bond composite panels, mounted behind a glass curtain wall and internally lit with an LED neon tube. Glass to be 48" w x 120" h 1/4" clear tempered. These would occur in the following locations:
   - Recessed Wilson Street entry condition with a 51 feet tall, L-shaped (10' x 20') wide.
   - The interior walls of the zip car garage to utilize same wall assembly without glass curtain wall.
6.) Aluminum T&G rain-screen panel. 18"W x 84"H. attached directly to wall panel. Wood grain walnut finish. Longboard Architectural products. See details and product sheet on Sheet A301.

SEA Design
N3302 South Oakland Road
Town of Oakland, Wiconsin
53538

progression

139 West Wilson
Madison, Wisconsin

West Elevation

Revisions:	
UDC	12/11/2023
P.C.	12/11/2023

Project #: 21.000
Issued For: Review
Date: 12/11/2023

A201

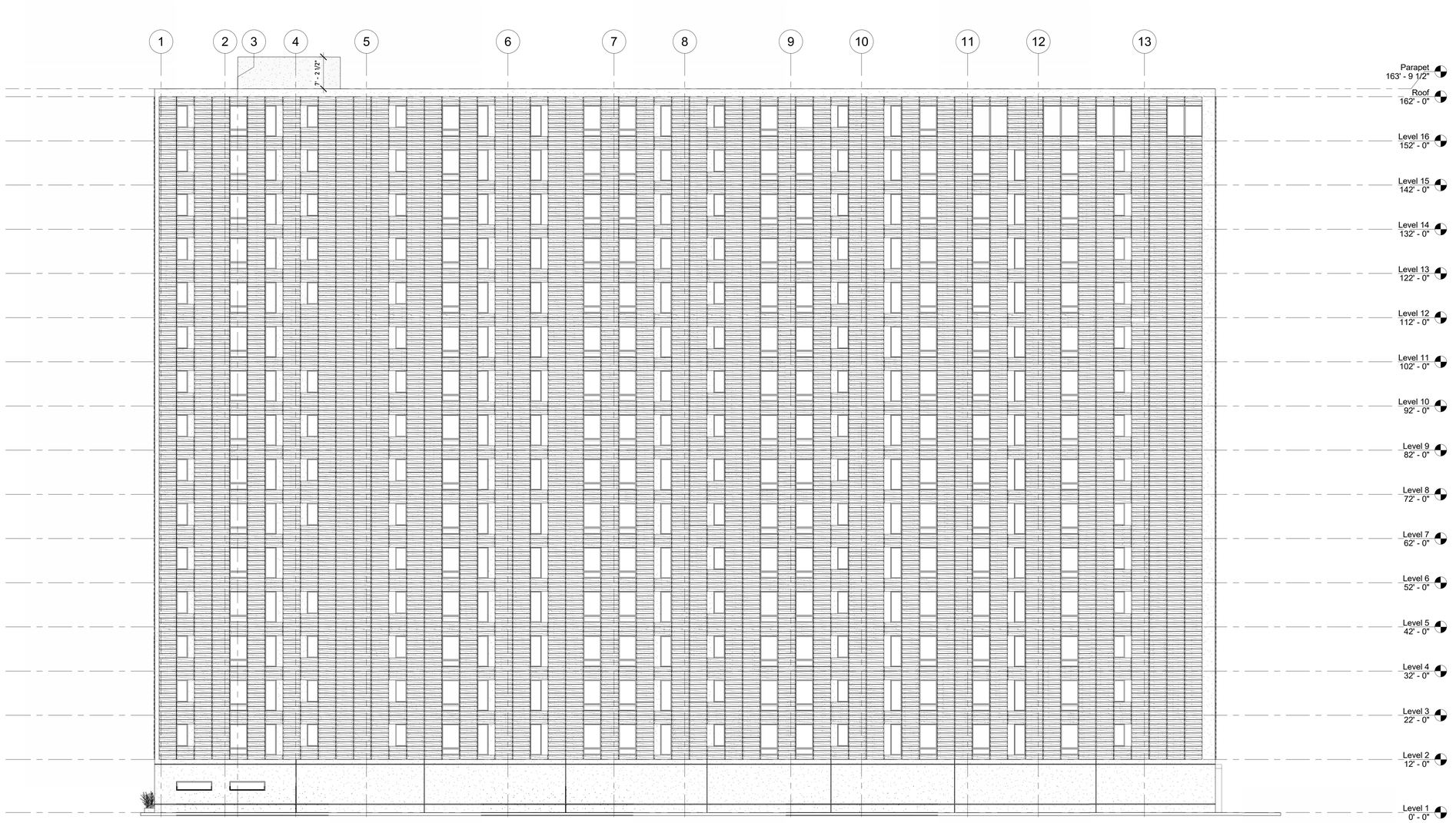

1 West - Black and white
3/32" = 1'-0"

SEA Design
N3302 South Oakland Road
Town of Oakland, Wiconsin
53538

progression

139 West Wilson
Madison, Wisconsin

West Elevation - B&W

Revisions:	
UDC	12/11/2023
P.C.	12/11/2023

Project #: 21.000
Issued For: Review
Date: 12/11/2023

A201.1

DARK BRONZE ANODIZED ALUMINUM FRAME DUAL PANE 1" INSULATED GLAZING WITH FLUSH- INTEGRATED LOUVER PANELS WHERE SHOWN. TYP.

WALNUT FINISH ALUMINUM PANELS.
See note 7 and Sheet A301.



1 South
3/32" = 1'-0"

ENCLOSED ELEVATOR PENTHOUSE AND EGRESS STAIR FOR FIRE DEPARTMENT ACCESS.

DARK BRONZE ANODIZED ALUMINUM FRAME DUAL PANE 1" INSULATED GLAZING WITH FLUSH- INTEGRATED LOUVER PANELS WHERE SHOWN. TYP.

WALNUT FINISH ALUMINUM PANELS.
See note 7 and Sheet A301.

ACID ETCHED CONCRETE WALL PANELS WITH 1' X 4' PROFILED FACETS. COLOR TO BE PEARL WHITE. TYP.

INTERNALLY LIT WALL ART ENCLOSURE.
See Note 5 this sheet

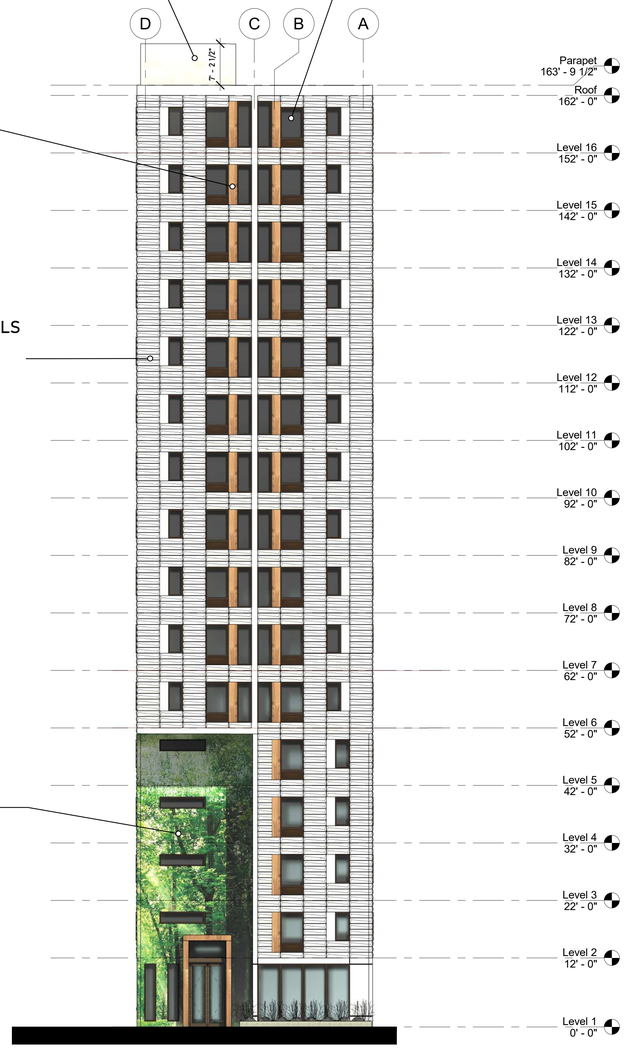

2 North
3/32" = 1'-0"

Acid etched concrete wall panel. Color: PEARL WHITE

GENERAL MATERIAL NOTES:

1.) The glass on all windows and doors shall be slightly tinted to allow views into and out of the interior.
2.) The primary exterior material will be an highly durable acid etched concrete wall panel by Wells Infinite Facades, typically 10' H x 32' W, with a custom faceted profile.
3.) The 1' x 4' faceting will occur on all facades.
4.) The facets incorporate a horizontal and vertical articulation and twist within each unit, creating a pattern and texture change throughout the facade.
5.) Wall art enclosures: See sheets A302; A302.1, and A302 for details. The art images would be color jet printed on 4' x 10 ' Di-bond composite panels, mounted behind a glass curtain wall and internally lit with an LED neon tube. Glass to be 48" w x 120" h 1/4" clear tempered. These would occur in the following locations:
   - Recessed Wilson Street entry condition with a 51 feet tall, L-shaped (10' x 20') wide.
   - The interior walls of the zip car garage to utilize same wall assembly without glass curtain wall.
6.) Aluminum T&G rain-screen panel. 18"W x 84"H. attached directly to wall panel. Wood grain walnut finish. Longboard Architectural products. See details and product sheet on Sheet A301.

SEA Design
N3302 South Oakland Road
Town of Oakland, Wisconsin
53538

progress

139 West Wilson
Madison, Wisconsin

North & South Elevations

Revisions:	
UDC	12/11/2023
P.C.	12/11/2023

Project #: 21.000
Issued For: Review
Date: 12/11/2023

A202

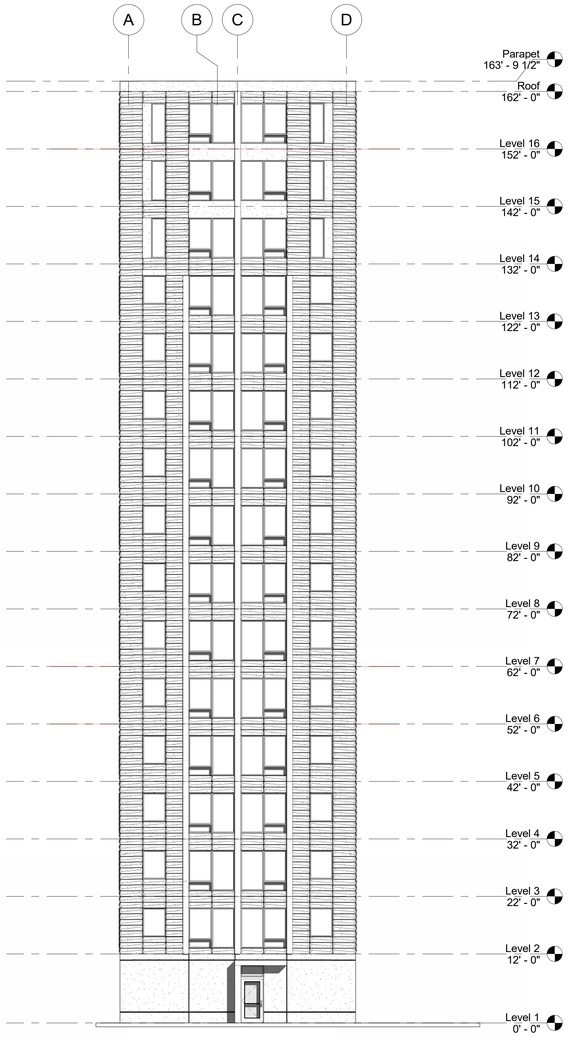

1 South - Black and white
3/32" = 1'-0"

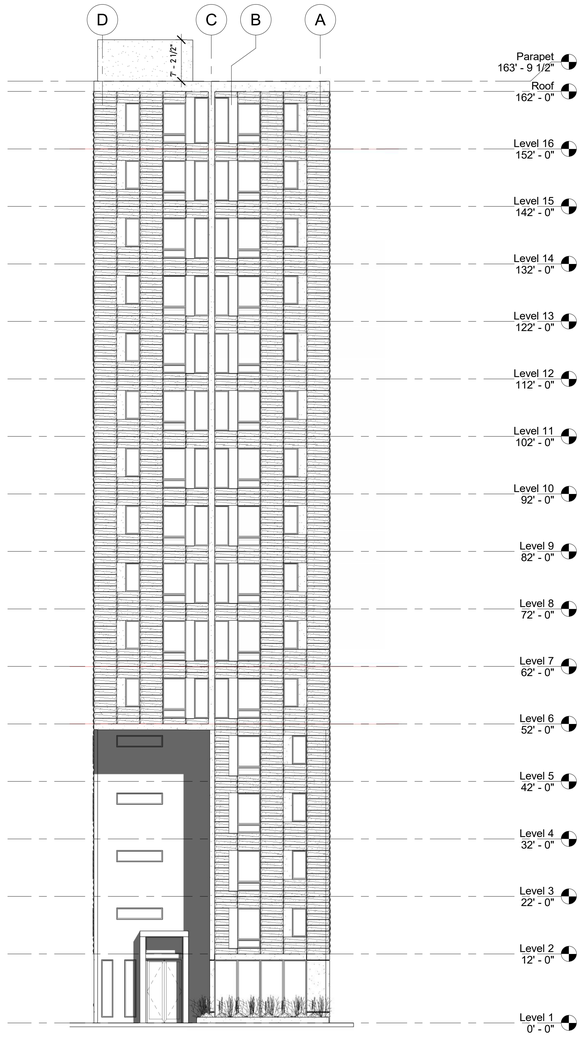

2 North - Black and white
3/32" = 1'-0"

SEA Design
N3302 South Oakland Road
Town of Oakland, Wiconsin
53538

progression

139 West Wilson
Madison, Wisconsin

North & South Elevations - B&W

Revisions:	
UDC	12/11/2023
P.C.	12/11/2023

Project #: 21.000
Issued For: Review
Date: 12/11/2023

A202.1



progression

139 West Wilson
Madison, Wisconsin

West Wilson Perspectives

Revisions:	
UDC	12/1/2023
P.C.	12/1/2023

Project #: 21.000
Issued For: Review
Date: 12/1/2023

A203

SEA Design
N3302 South Oakland Road
Town of Oakland, Wiconsin
53538



progression

139 West Wilson
Madison, Wisconsin

West Wilson Perspectives

SEA Design

N3302 South Oakland Road
Town of Oakland, Wiconsin
53538

A204

Project #: 21.000
Issued For: Review
Date: 12/11/2023

Revisions:
UDC 12/11/2023
P.C. 12/11/2023



progression

139 West Wilson
Madison, Wisconsin

West Wilson Perspective - Night

SEA Design

N3302 South Oakland Road
Town of Oakland, Wiconsin
53538

Revisions:	
UDC	12/1/2023
P.C.	12/11/2023

Project #: 21.000
Issued For: Review
Date: 12/1/2023

A204.1

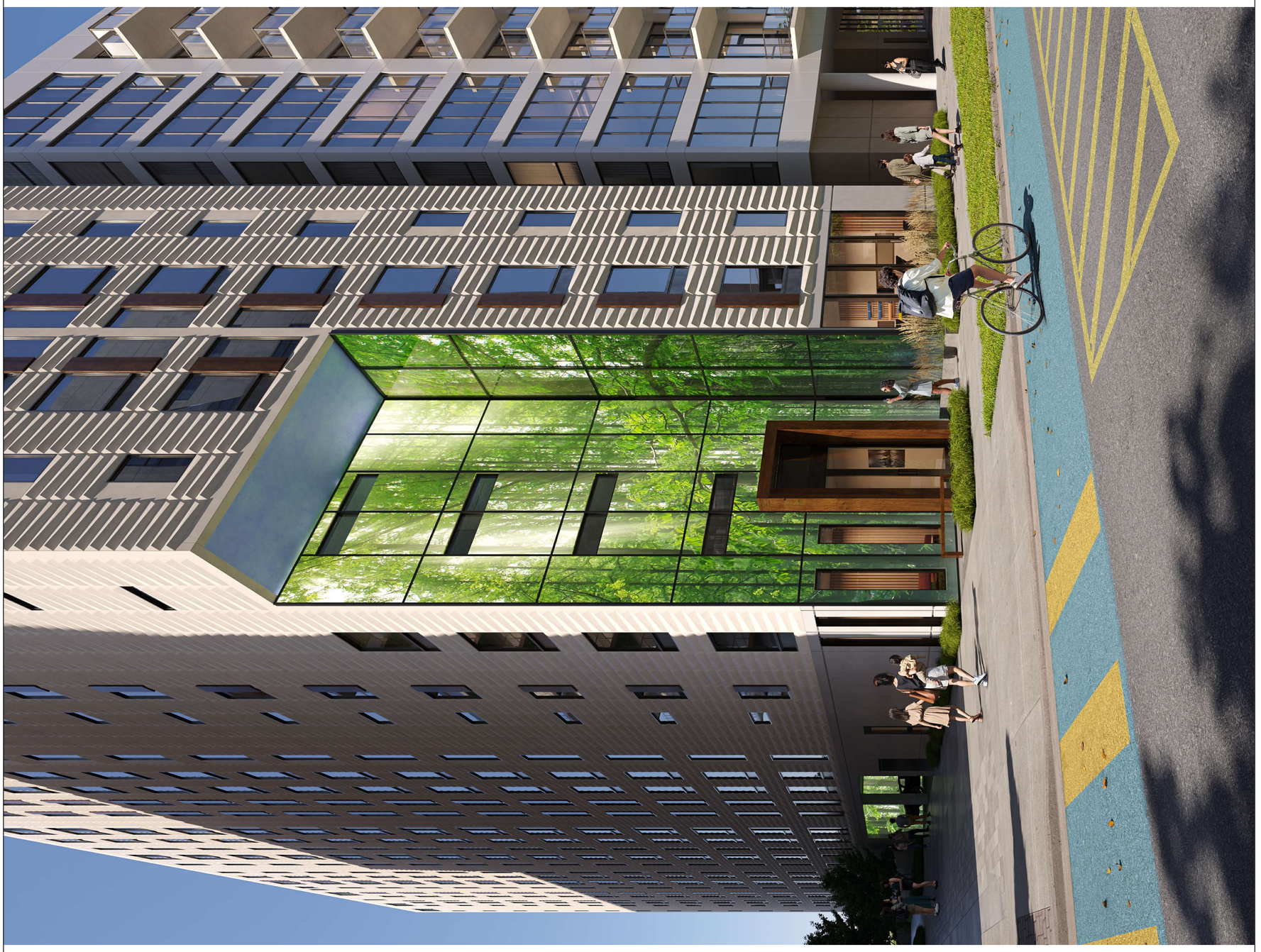

Revisions:	
UDC	12/1/2023
P.C.	12/1/2023

Project #: 21.000
Issued For: Review
Date: 12/1/2023

A205

progression

139 West Wilson
Madison, Wisconsin

West Wilson Perspectives

SEA Design
N3302 South Oakland Road
Town of Oakland, Wiconsin
53538



progression

139 West Wilson
Madison, Wisconsin

West Wilson Perspectives

SEA Design

N3302 South Oakland Road
Town of Oakland, Wiconsin
53538

Revisions:	
UDC	12/1/2023
P.C.	12/11/2023

Project #: 21.000
Issued For: Review
Date: 12/1/2023

A206



Revisions:	
UDC	12/1/2023
P.C.	12/1/2023

Project #: 21.000
Issued For: Review
Date: 12/1/2023

A207

progression

139 West Wilson
Madison, Wisconsin

West Wilson Perspectives

SEA Design

N3302 South Oakland Road
Town of Oakland, Wiconsin
53538

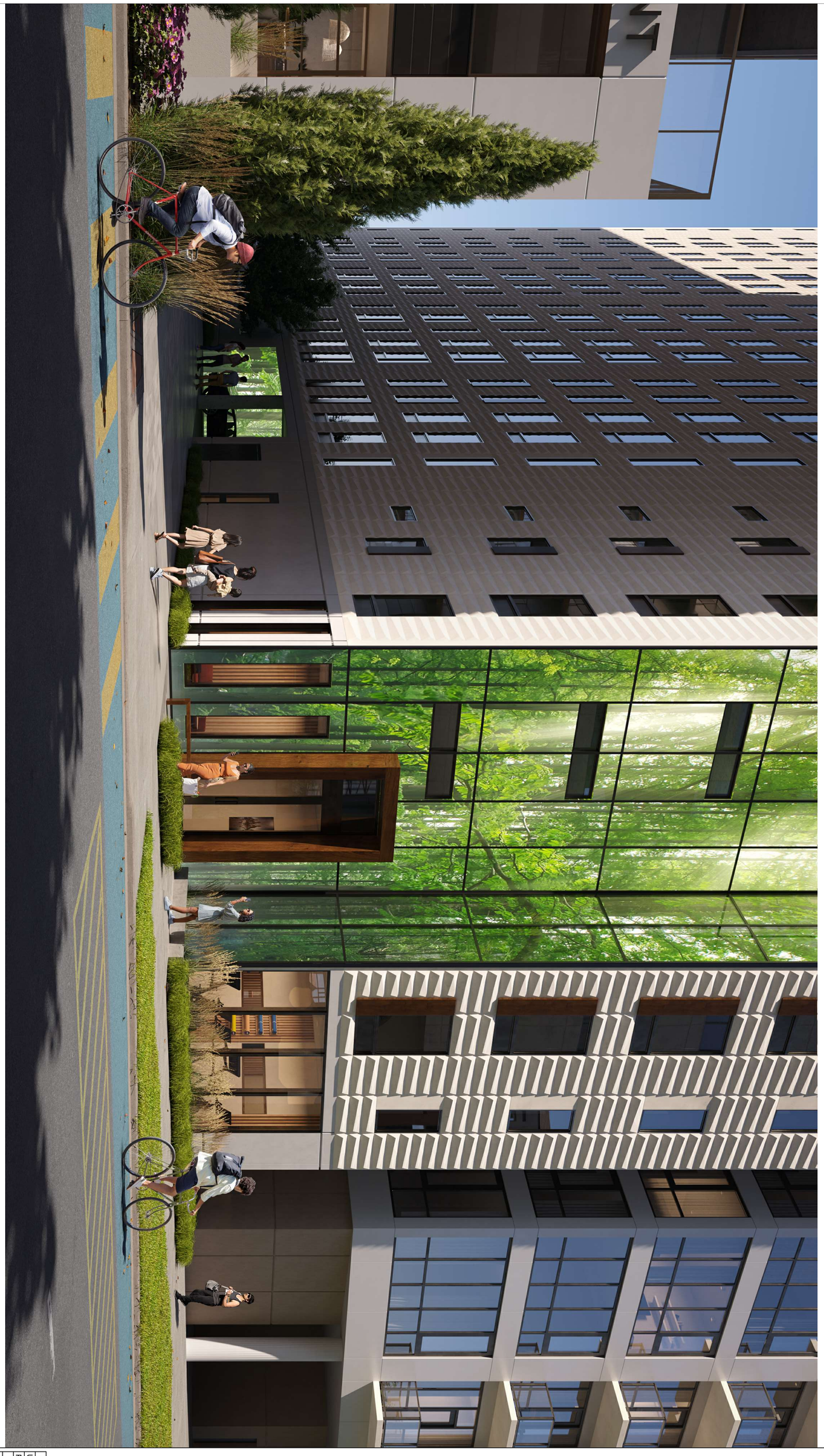

progression

139 West Wilson
Madison, Wisconsin

West Wilson Entry perepective

SEA Design

N3302 South Oakland Road
Town of Oakland, Wiconsin
53538

Revisions:	
UDC	12/1/2023
P.C.	12/1/2023

Project #: 21.000
Issued For: Review
Date: 12/1/2023

A208

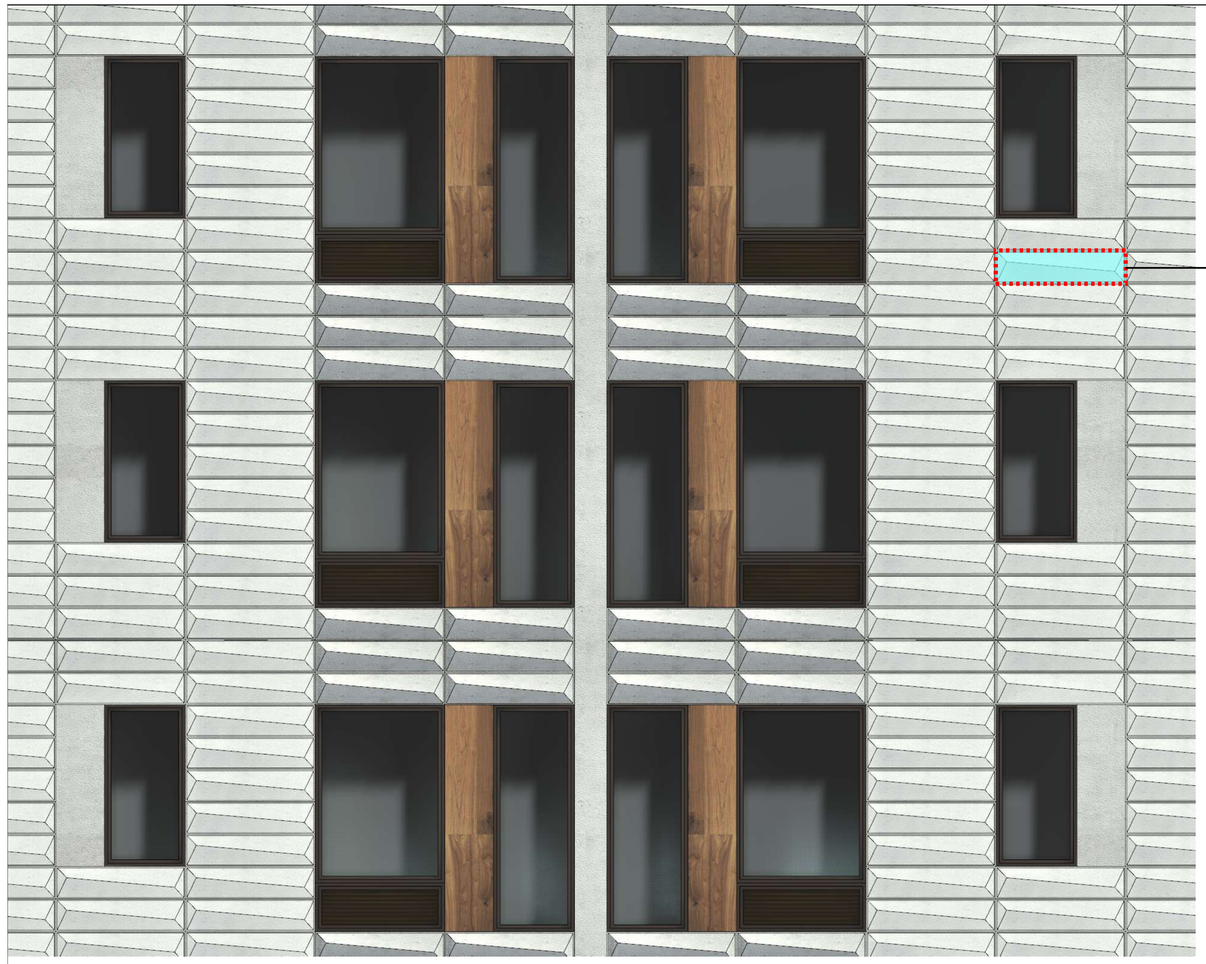

Typical 1' x 4' faceted unit

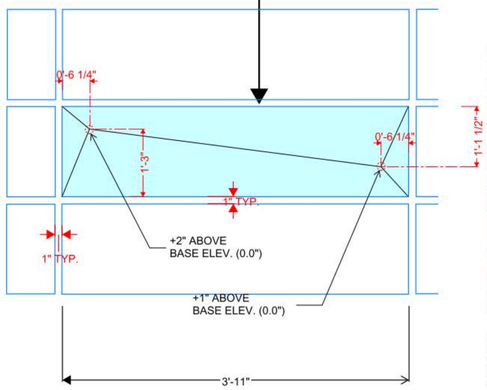

PRIMARY EXTERIOR MATERIAL:

Factory fabricated concrete skin wall panels whose primary sizes are 10' H x 24' W and 32' W.

Within each large panel the surface contains multiple custom formed 1' H x 4' W facets.

The concrete has a fine acid etched finish with pearl white color.

Wall panel manufacture is Wells Infinite Facade.
www.infinitefacade.com
Project manager is Dan Stenzel (dan.stenzel@wellsconcrete.com)





Acid etched concrete wall panel. Color: PEARL WHITE

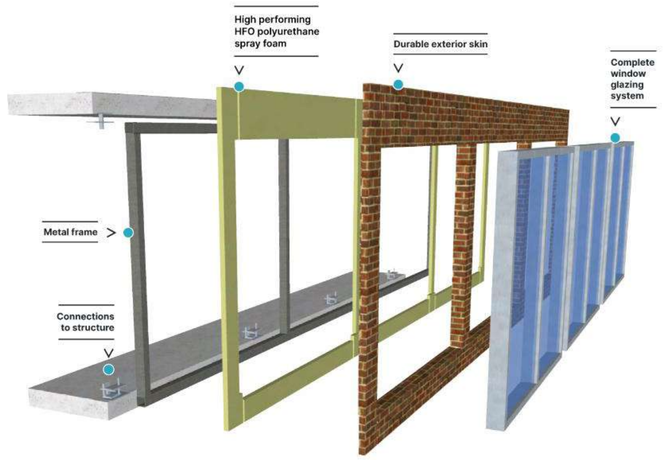

Complete wall shipped to site, craned in place and attached to structure, maximizing schedule efficiency.

WELLS
PRECAST | INNOVATORS

BENEFITS OF PREFABRICATION

- Reduces site impacts
- Accelerates construction schedules
- Ensures constructability
- Provides budget certainty
- Factory quality
- Reduces risk
- Streamlined logistics and shipping processes

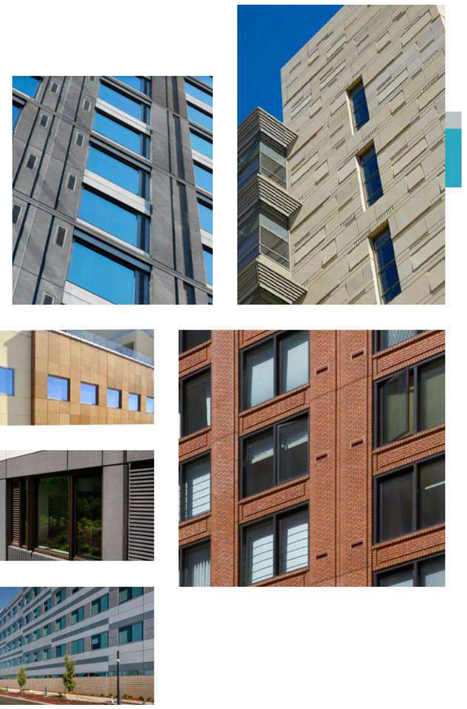

WELLS
PRECAST | INNOVATORS

Finishes

Our exterior finish options are limitless. In addition to the wide variety of colors and textures currently available in traditional precast, other materials can be cast into the exterior veneer – such as brick, terracotta, and stone. The use of form liners also allows for an endless number of geometric patterns and reveals to be incorporated into the design.

Aesthetic Customization

1 Pick the texture you like. × 2 Choose your color scheme. × 3 Select your finish style.



SEA Design
N3302 South Oakland Road
Town of Oakland, Wisconsin
53538

progression
139 West Wilson
Madison, Wisconsin

Exterior materials

Revisions:	
UDC	12/11/2023
P.C.	12/11/2023

Project #: 21.000
Issued For: Review
Date: 12/11/2023

A300



4TH FLOOR

Smooth acid etched finish FLAT concrete panel. MINOR TEXTURAL EFFECT. Size and location varies. See Elevations.

Smooth acid etched finish concrete FACET. MAJOR TEXTURAL EFFECT. TYPICAL ON ALL FACADES.

3RD FLOOR

Smooth acid etched finish FLAT concrete panel. MINOR TEXTURAL EFFECT. Size and location varies. See Elevations.

2ND FLOOR

Smooth acid etched finish concrete panel with 1.5 - 2" vertical and horizontal reveals at FIRST FLOOR BASE. TYPICAL at all elevations.

PARTIAL AREA OF NORTH FACADE SHOWING THE TWO TEXTURAL EFFECTS ON THE CONCRETE WALL PANELS

SEA Design
N3302 South Oakland Road
Town of Oakland, Wiconsin
53538

progression

139 West Wilson
Madison, Wisconsin

Exterior materials

Revisions:	
UDC	12/11/2023
P.C.	12/11/2023

Project #:	21.000
Issued For:	Review
Date:	12/11/2023

A300.1



ENLARGED PARTIAL NORTH FACADE SHOWING TYPICAL WINDOW - LOUVER - LONGBOARD CONFIGURATION AND SIZES

SEE A301.1 FOR TYPICAL DETAILS OF INTEGRATED ALUMINUM WINDOW AND LOUVER FRAME FROM MANUFACTURER

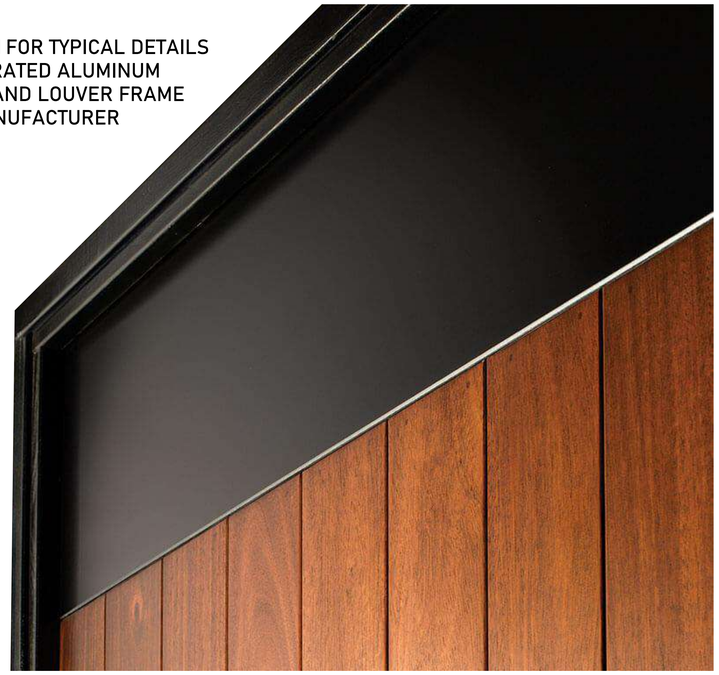

DARK BRONZE ALUMINUM NEXT TO TABLE WALNUT - 1 VERTICAL LONGBOARD

LONGBOARD ARCHITECTURAL PRODUCTS - TONGUE AND GROOVE CLADDING SYSTEM - 4" WIDE (4V) VERTICAL ORIENTATION. COLOR: TABLE WALNUT -1

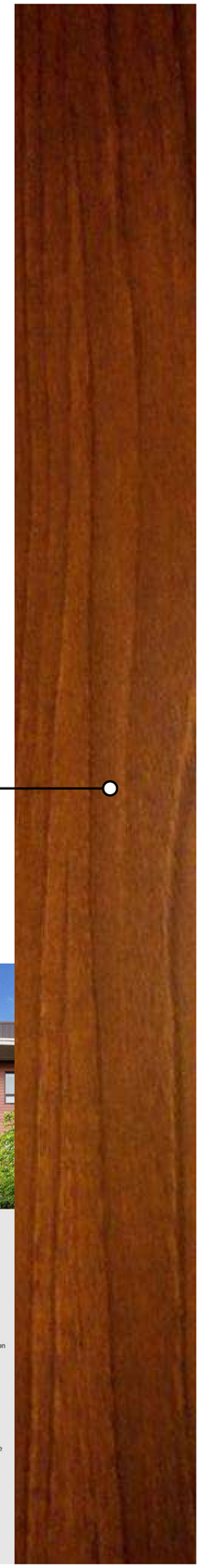



1" INSULATED CLEAR GLASS - SLIM PROFILE ALUMINUM STOREFRONT WINDOW SYSTEM.

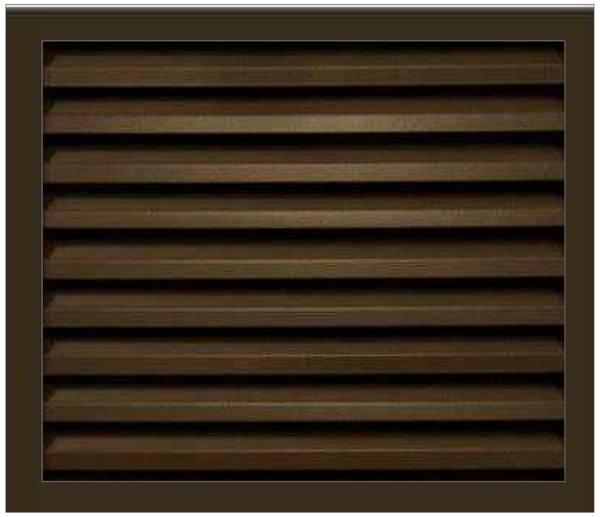

DARK BRONZE ANODIZED ALUMINUM FINISH AT ALL EXTERIOR WINDOWS, DOORS AND INTEGRSL WINDOW LOUVERS.

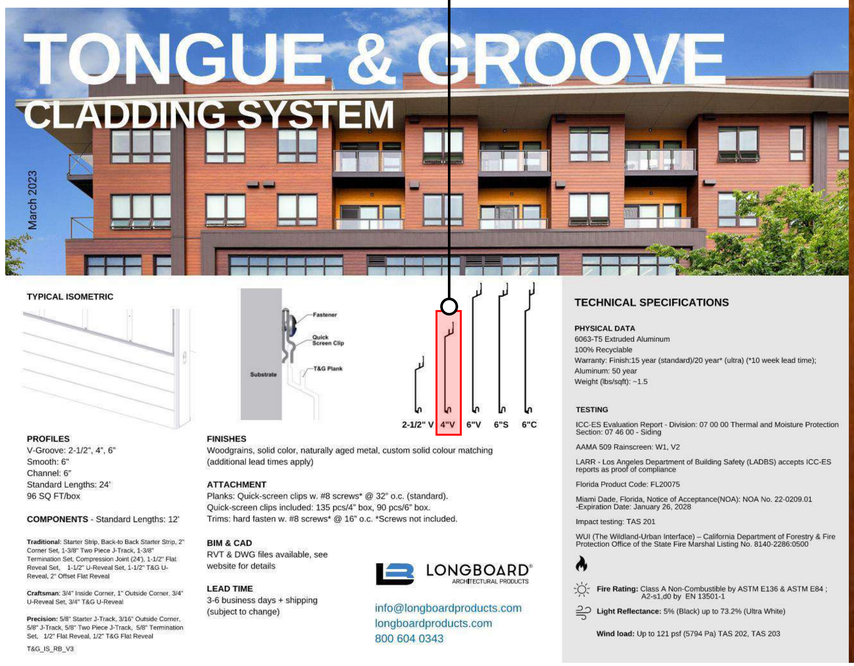

SEA Design
N3302 South Oakland Road
Town of Oakland, Wisconsin
53538

progression

139 West Wilson
Madison, Wisconsin

Exterior materials

Revisions:	
UDC	12/11/2023
P.C.	12/11/2023

Project #: 21.000
Issued For: Review
Date: 12/11/2023

A301

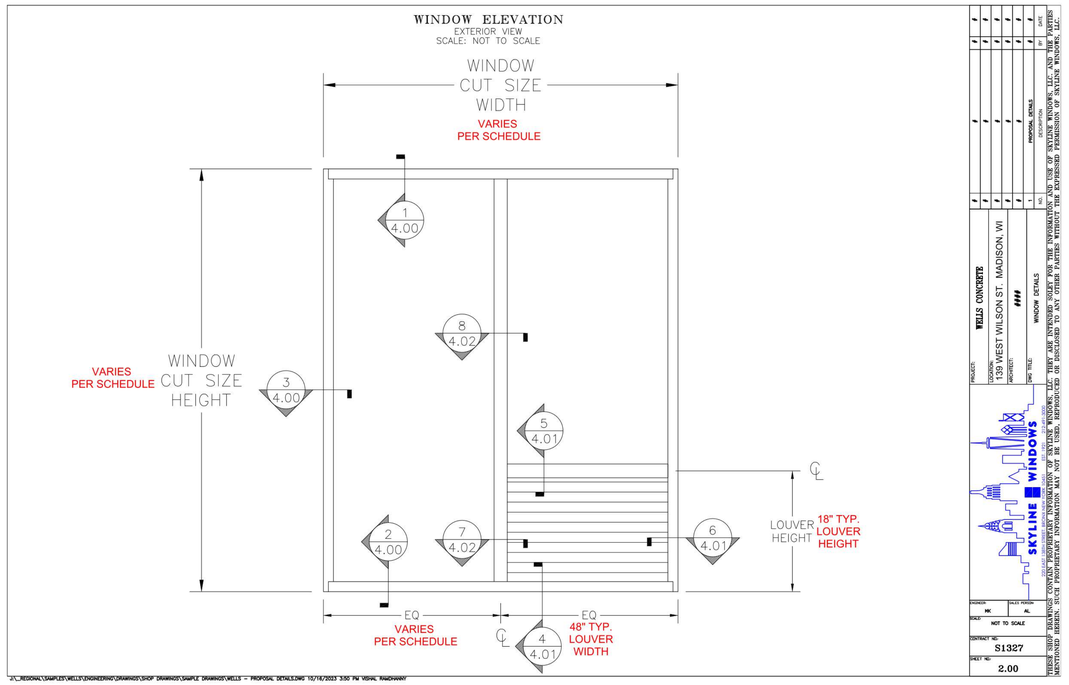

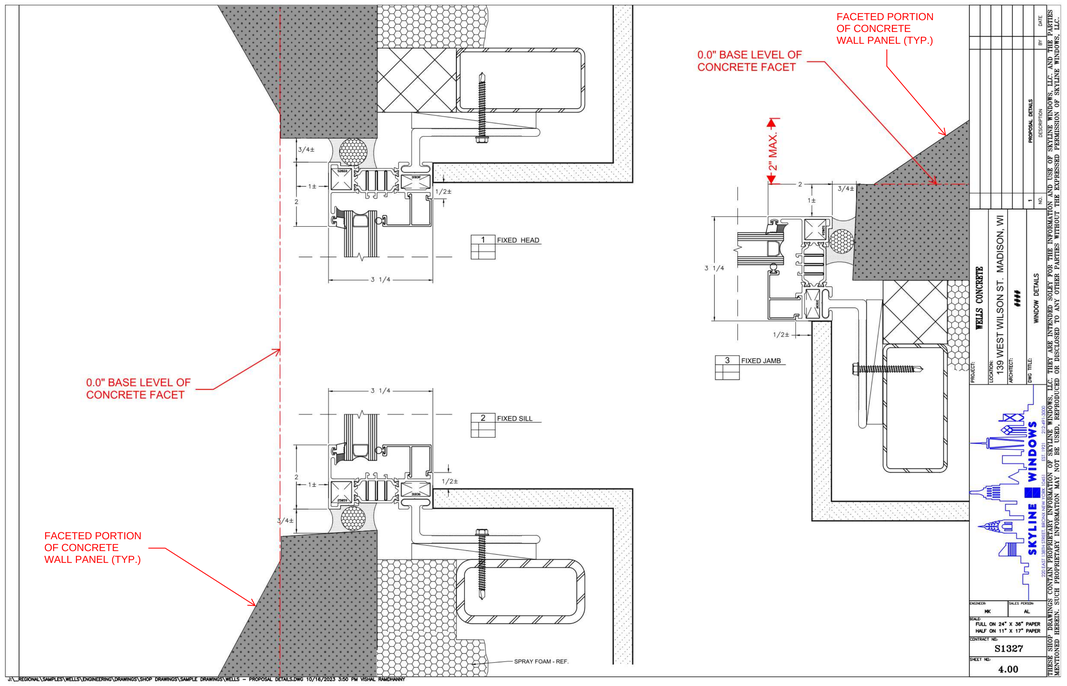

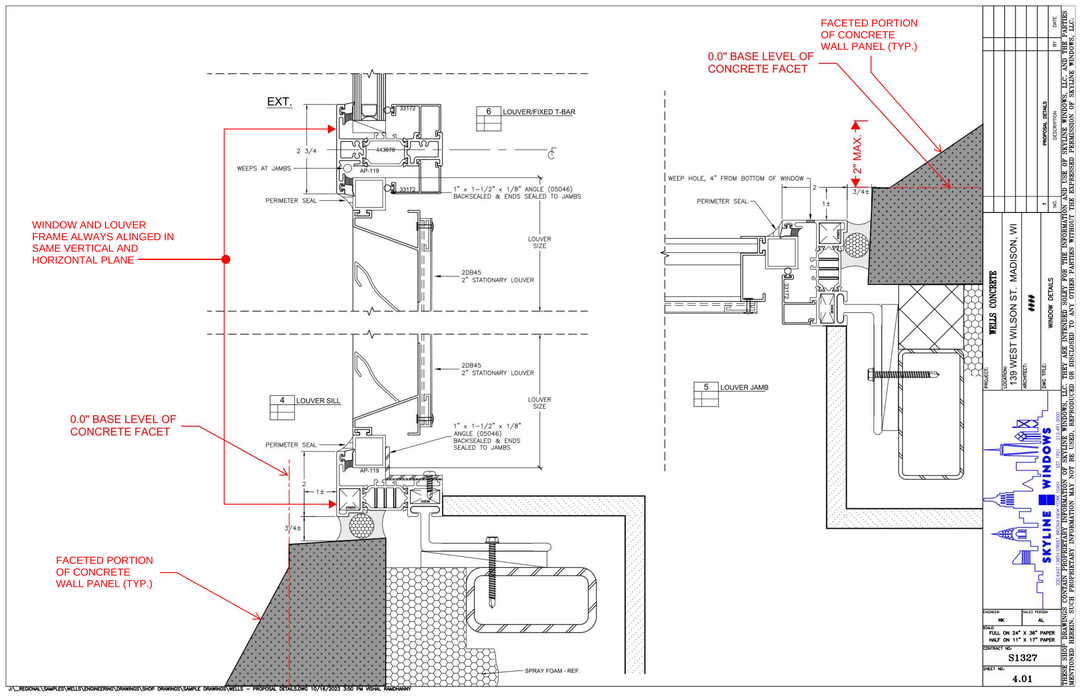

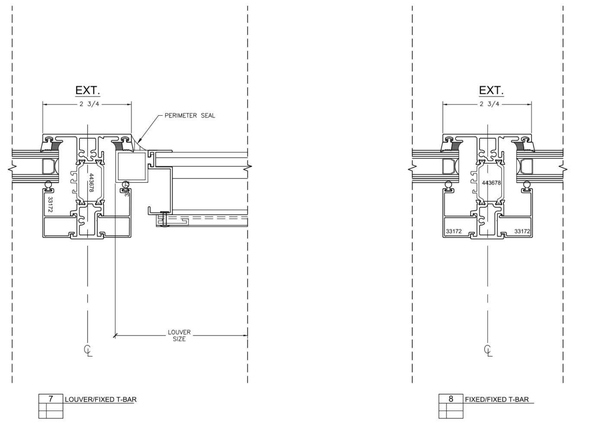

SEA Design
N3302 South Oakland Road
Town of Oakland, Wiconsin
53538

progression
139 West Wilson
Madison, Wisconsin

Integral Aluminum Frame Window and Louver details

Revisions:	
UDC	12/11/2023
P.C.	12/11/2023

Project #: 21.000
Issued For: Review
Date: 12/11/2023

A301.1

EXTERIOR WALL ASSEMBLY: 5/8" Type 'X' GWB" 6" metal studs; polyurea insulation; Dens-Glass sheathing' hi-res digital forest photograph printed directly on aluminum composite material (ACM) Dibond panel.

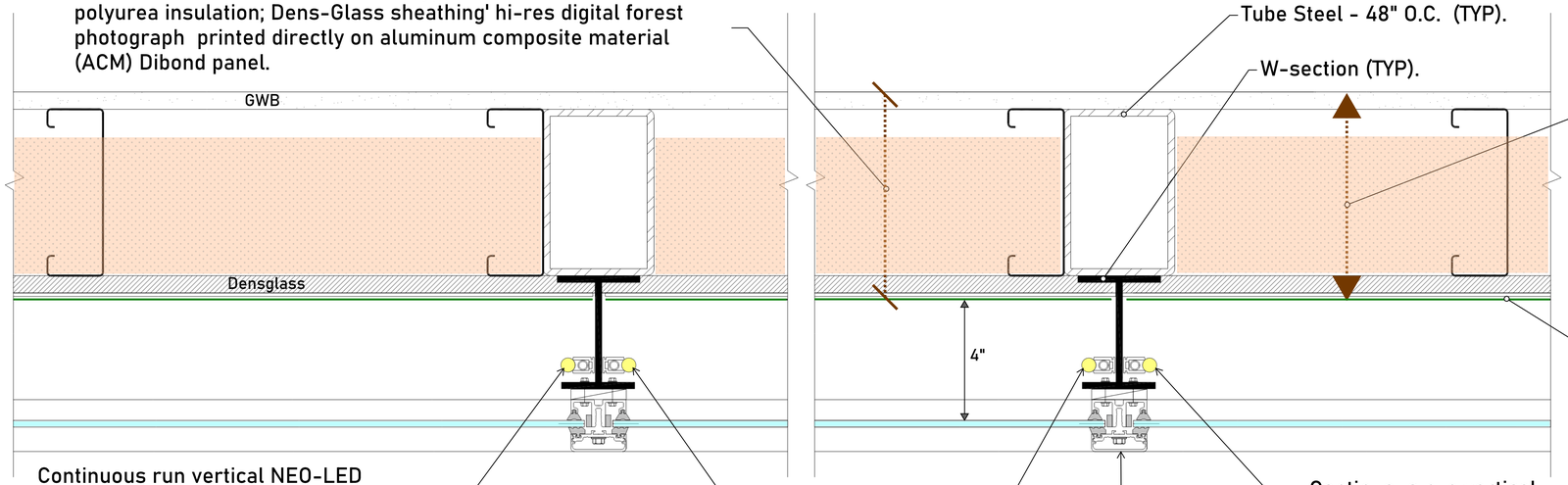

Tube Steel - 48" O.C. (TYP).

W-section (TYP).

Window systems located within this portion of the overall curtain wall assembly. Where occurs on all elevations. (TYP).

1 Exterior art wall - Plan detail (TYP)

3mm Di-bond panel with forest graphic printed directly on aluminum using waterproof, UV-cured inks.

Continuous run vertical NEO-LED tube by Acolyte. Variable white @ 2500K - 6000K. Mounting clip attached to W-section. Access panels located at floors 3, 6 and roof.

Continuous run vertical NEO-LED tube. TYP. on both sides of web.

Continuous run vertical NEO-LED tube. TYP. on both sides of web.

YCW Veneer curtain wall system by YKK AP America. 48" x 120" 1/4" clear tempered glass panels set in vertical and horizontal 2" wide black anodized aluminum capture system as shown.

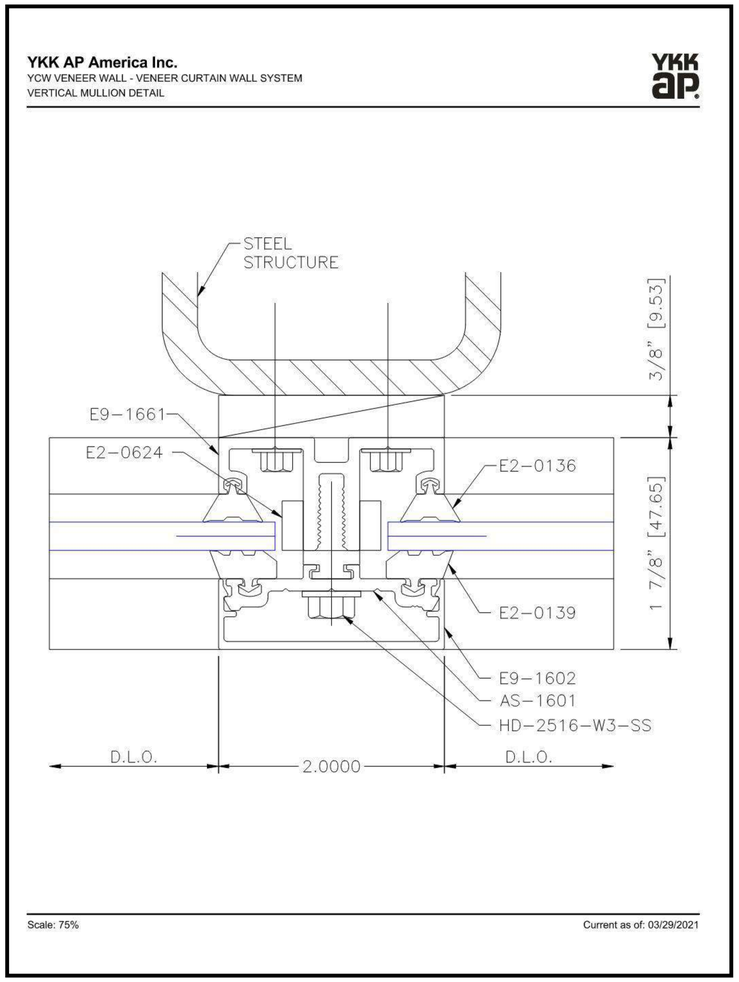

2 Curtain wall - Mullion detail (TYP)

NOTE:

Internally lit wall to use Acolyte LED neon tubes.
proposed in variable white (2400K - 6000K) for flexibility in final effect.

See Sheet A302.1 and A300 for more information on design proposal.

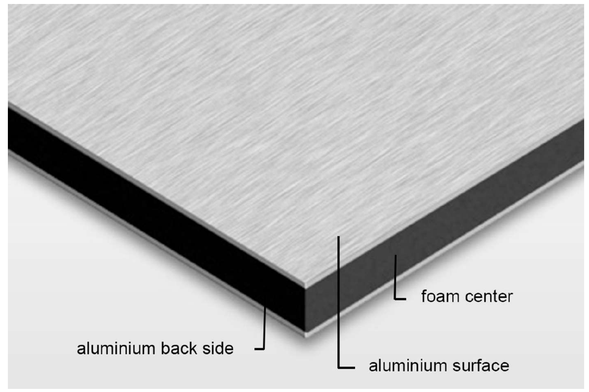

3 3mm (1/8").DiBond-Aluminum Composite material (ACM).

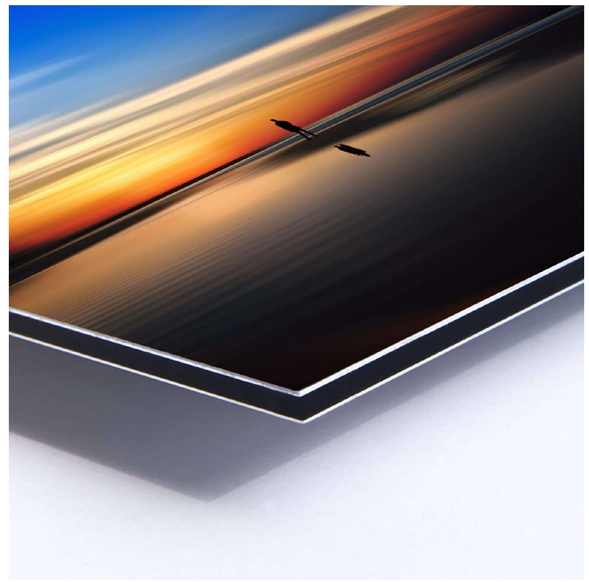

4 Example of direct print (ACM).

SEA Design
N3302 South Oakland Road
Town of Oakland, Wiconsin
53538

progression
139 West Wilson
Madison, Wisconsin

Internally illuminated wall details

Revisions:	
UDC	12/11/2023
P.C.	12/11/2023

Project #: 21.000
Issued For: Review
Date: 12/11/2023

A302

Date

Project
139 West Wilson Street

Notes
product proposed:
NLCP 4.5VW

NEON CONTOUR PLUS

This bendable, waterproof silicone fixture features all the benefits of modern LEDs while creating the classic look of neon tubes. Available in Static White, Variable White and color changing RGBW, Neon Contour Plus is designed with a larger profile to brave the elements in façade lighting and lettering. It's like neon, but better – and bigger!

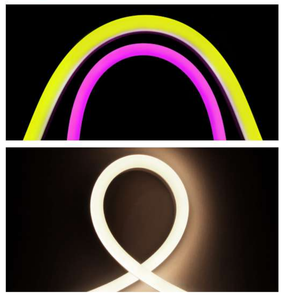

- Side-bending flexible silicone creates larger vivid tubes of light
- RGBW, Static White, Variable White at 4.5 W/ft (14.76 W/m)
- Static White, Variable White cut lengths at 1.97 in. (50 mm)
- RGBW cut lengths at 3.28 in. (83.33 mm)
- Waterproof and UV resistant
- Unique rounded design helps create signature styles
- Assembled in U.S.

Applications:

Commercial
Entertainment
Healthcare

Hospitality
Museums
Public Spaces

Residential
Retail / Signage

RoHS IP67

ORDERING GUIDE

Category	Wattage & Color		Power Feed Direction
NLCP			
NLCP - Neon Contour Plus	**4.524** - 4.5 W/ft 2400K	**4.5VW** - 4.5 W/ft Variable White (2400K-6000K)	**E** - End Feed
	4.527 - 4.5 W/ft 2700K	**4.5RGB27** - 4.5 W/ft RGB+White (2700K)	**B** - Bottom Feed
	4.530 - 4.5 W/ft 3000K	**4.5RGB30** - 4.5 W/ft RGB+White (3000K)	
	4.535 - 4.5 W/ft 3500K	**4.5RGB40** - 4.5 W/ft RGB+White (4000K)	
	4.540 - 4.5 W/ft 4000K		

Mounting

1. Aluminum Mounting Clip
Recommended for curved applications with 6 in. (150 mm) on center spacing
Part #: NLCPMOUNTCLIPV2

2. Neon Contour Plus Mounting Channel
Recommended for all straight run applications
Sold by the foot, up to 6 ft 6 in. / 2 m
Part #: NLCPCHV2

AVAILABLE COLORS AND COLOR TEMPERATURES

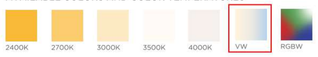

POWER FEED OPTIONS / SPECIFICATIONS / USAGE GUIDELINES

SPECIFICATIONS	NEON CONTOUR PLUS
Operating Voltage	24V DC
Power Consumption	Static White, Variable White, RGBW: 4.5 W/ft (14.76 W/m)
Protection Rating	IP67
Beam Angle	110°
Dimming	ELV / MLV / 0-10 Volt / DMX / Lutron A-Series 1% dimming LED drivers
Operating Temperature	-4° F to 140° F (-20° C to 60° C)
Color Temperatures / Colors	2400K, 2700K, 3000K, 3500K, 4000K, Variable White (2400K-6000K) RGBW (2700K, 3000K, 4000K)
Lamp Life	50,000 Hours
Max Length	Static White: 39 ft 4.4 in. (12 m) (Not Field Cuttable) Variable White, RGBW: 16 ft 4.85 in. (5 m) (Not Field Cuttable)
Cuttable Length	Static White, Variable White: 1.97 in (50 mm) RGBW: 3.28 in. (83.33 mm)
Power Cable Length	Standard: 12 in. (304.8 mm) / Custom: up to 20 ft (6 m)
UV Resistant	UV tested in accordance with ISO 4892-3 with no visible change on the appearance of the sample
Minimum Bend Diameter	11.8 in. (300 mm)
CRI (white)	90+ for all Color Temperatures
Lumens	**4.5 Static White** 4000K: 206 lm/ft (675.7 lm/m), 43 lm/W **4.5 Variable White** 164 lm/ft (537.92 lm/m), 34 lm/W **4.5 RGBW** Red: 9 lm/ft (29.5 lm/m), 8 lm/W / Green: 27 lm/ft (88.56 lm/m), 19 lm/W / Blue: 7 lm/ft (22.96 lm/m), 5 lm/W White: 47 lm/ft (154.16 lm/m), 28 lm/W / All LEDs at 100%: 90 lm/ft (295.2 lm/m), 20 lm/W

MOLDED END CAPS



Molded End Cap

Molded Power Feed End Cap

USAGE GUIDELINES

- When installing this product take into account the surface temperature of the material where it will be mounted. Many building surfaces which are exposed to direct sunlight exceed the 140° F/60° C maximum that our product is rated for. High-risk locations like this should be avoided.
- This product is not intended to be submerged in pools and fountains and does not carry UL 676 certification to do so. Available for download at www.GENLEDBrands.com/Acolyte
- Compatible with a wide variety of control products including the entire line of Lutron dimming systems.
- For use with Acolyte drivers, triac dimming modules, and 0-10 modules.
- Use with non-Acolyte triac, MLV or ELV drivers is not supported or warrantied
- Due to the cuttable points inside, this product's cuttable lengths are generally longer or shorter than the customer requested length. Unless specified, this product is factory cut at the shorter cuttable point
- This product can be used in wet, outdoor locations around swimming pools and spa tubs, but not submerged in swimming pools and spa tubs.
- We reserve the right to make changes to product lineup, specifications, design and finishes at any time without notice.

Acolyte does not warrant or represent that this information is free from errors or omission. The information may change without notice and Acolyte is not in any way liable for the accuracy of any information printed and stored or in any way interpreted or used.

DIMENSIONS & DIAGRAMS

WITH BOTTOM FEED MOLDED END CAP

Side View

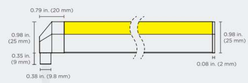

Max Lengths:
Static White: 39 ft 4.4 in. (12 m)
Variable White: 16 ft 4.85 in. (5 m)
RGBW: 19 ft 8.2 in. (6 m)

End View

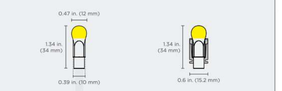

Width: 0.47 in. (12 mm)
Height: 1.34 in. (34 mm)
Cable Diameter: 0.24 in. (6 mm)

Width: 0.6 in. (15.2 mm)
Height: 1.34 in. (34 mm)

WITH END FEED MOLDED END CAP

Side View

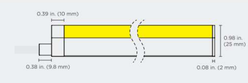

Max Lengths:
Static White: 39 ft 4.4 in. (12 m)
Variable White: 16 ft 4.85 in. (5 m)
RGBW: 19 ft 8.2 in. (6 m)

End View

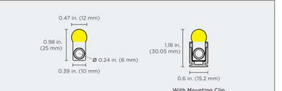

Width: 0.47 in. (12 mm)
Height: 0.98 in. (25 mm)
Cable Diameter: 0.24 in. (6 mm)

Width: 0.6 in. (15.2 mm)
Height: 1.18 in. (30.05 mm)

MOUNTING CLIP
Recommended for curved applications with 6 in. (150 mm) on center spacing.

Top View



Width: 0.83 in. (21.2 mm)
Depth: 0.79 in. (20 mm)

End View



Width: 0.6 in. (15.2 mm)
Height: 0.83 in. (21 mm)

MOUNTING CHANNEL
Recommended for all straight run applications.
Sold by the foot, up to 6 ft 6 in. / 2 m (same width & height as mounting clip)
(Part #: NLCPCHV2)

HYDRO SEAL

The Hydro Seal clinches tightly around the conductors to prevent any water flow from the end of the wire to the circuit board through capillary effect.

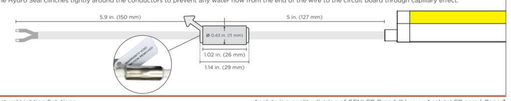

Length: 0.79 in. / 20 mm
Width: 0.6 in. / 15.2 mm

WIRING DIAGRAMS

0-10V

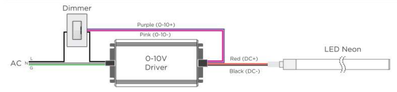

MLV / ELV

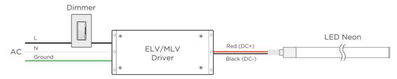

DMX

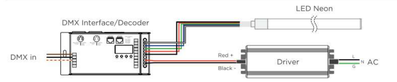

2-CHANNEL VARIABLE WHITE DIMMING

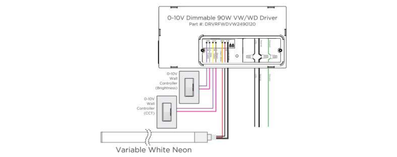

DMX WIRING DIAGRAM - COMPATIBLE WITH ALL MODELS OF VARIABLE WHITE RIBBONLYTE

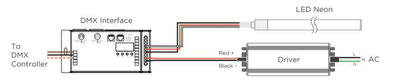

WIRE COLORS PER RIBBONLYTE COLOR

STATIC WHITE
Red Wire (+) Positive
Black Wire (-) Negative

RGBW
Black Wire (+) Positive
Red Wire (-) goes to Red Channel
Green Wire (-) goes to Green Channel
Blue Wire (-) goes to Blue Channel
White Wire (-) goes to White Channel

VARIABLE WHITE
Black Wire (+) Positive
Red Wire (-) goes to Warm White Channel
White Wire (-) goes to Cool White Channel

REV.20JUN2023

NOTE:

Internally lit wall to use Acolyte LED neon tubes.
proposed in variable white (2400K - 6000K) for flexibility in final effect.

See Sheet A302 and A300 for more information on design proposal.

SEA Design
N3302 South Oakland Road
Town of Oakland, Wiconsin
53538

progression
139 West Wilson
Madison, Wisconsin

Internally illuminated wall details

Revisions:	
UDC	12/11/2023
P.C.	12/11/2023

Project #: 21.000
Issued For: Review
Date: 12/11/2023

A302.1



1 North Curtain wall Elevation



2 North Curtain wall LED light locations

SEA Design
N3302 South Oakland Road
Town of Oakland, Wiconsin
53538

progression
139 West Wilson
Madison, Wisconsin

Internally illuminated wall details

Revisions:	
UDC	12/11/2023
P.C.	12/11/2023

Project #: 21.000
Issued For: Review
Date: 12/11/2023

A303

Maximum height for this proposal given MGO 28.134 (3) - Capital view preservation

City Datum @ 0'-0" is established per code at 845.6'. From there to top of column capital at rotunda, code provides max height of 187.2 above datum.

The sum of these is 1032.8'.

Elevation at front center of sidewalk is 868.305'.

Our FFE is 868.75'.
As a result the max height for this proposal is 1032.8' - 868.75' = 164.05'.

Top of parapet is 163' - 9 1/2"

Conditional approval requested for penthouse overun of 7'-2 1/2" above parapet.

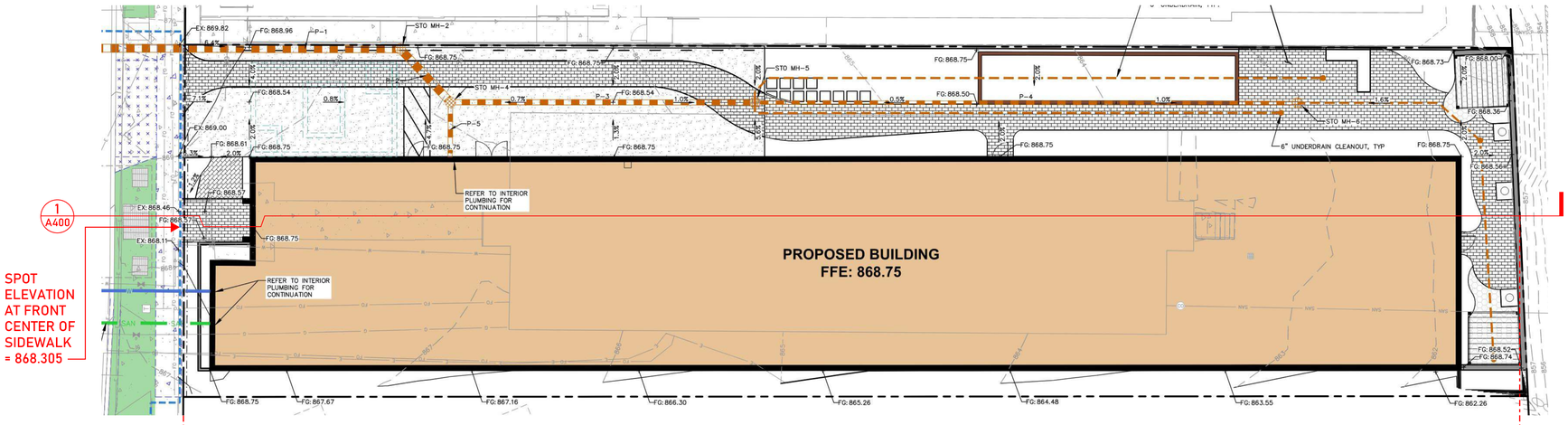

2 Grading plan
3/32" = 1'-0"

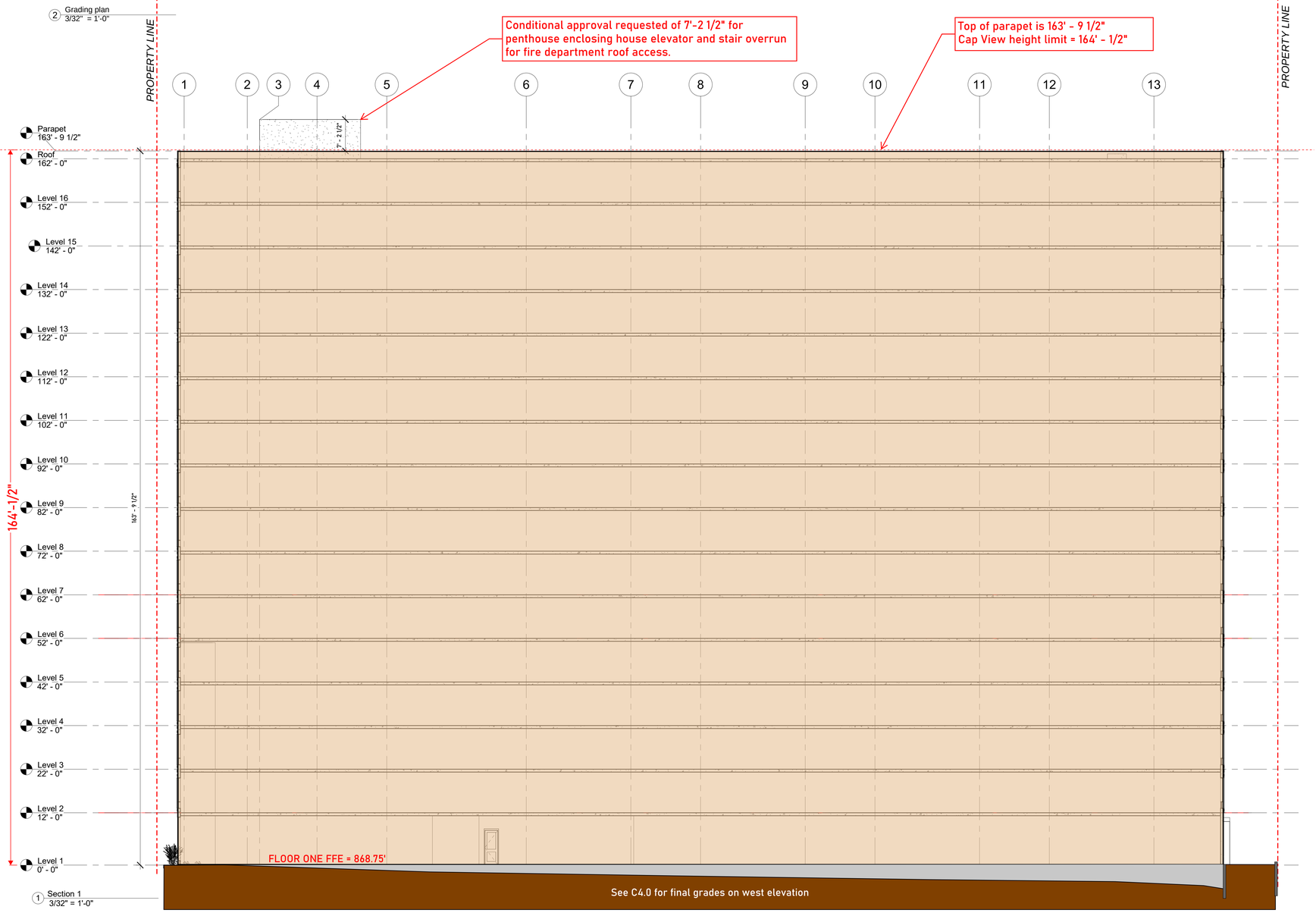

1 Section 1
3/32" = 1'-0"

Low profile solar array system

SunPeak DeltaWing

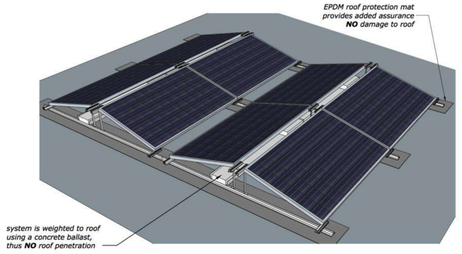

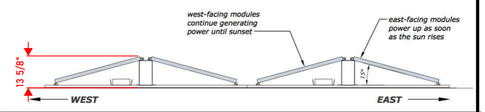

PV array system is below CAP view limit. PV panels and array brackets are 13 5/8" tall and parapet is 21 1/2" high.



SEA Design
N3302 South Oakland Road
Town of Oakland, Wiconsin
53538

progression
139 West Wilson
Madison, Wisconsin

EXHIBIT - Capital View Height Limit

Revisions:	
UDC	12/11/2023
P.C.	12/11/2023

Project #: 21.000
Issued For: Review
Date: 12/11/2023

A400



Revisions:	
UDC	12/11/2023
P.C.	12/11/2023

Project #: 21.000
Issued For: Review
Date: 12/11/2023

A401

progression

139 West Wilson
Madison, Wisconsin

Long View from Olin Park

SEA Design

N3302 South Oakland Road
Town of Oakland, Wiconsin
53538



progression

139 West Wilson
Madison, Wisconsin

Long View from John Nolen Drive

SEA Design
N3302 South Oakland Road
Town of Oakland, Wiconsin
53538

Revisions:	
UDC	12/11/2023
P.C.	12/11/2023

Project #:	21.000
Issued For:	Review
Date:	12/11/2023

A402