URBAN DESIGN COMMISSION APPLICATION

UDC

City of Madison
Planning Division
Madison Municipal Building, Suite 017
215 Martin Luther King, Jr. Blvd.
P.O. Box 2985
Madison, WI 53701-2985
(608) 266-4635

FOR OFFICE USE ONLY:

Date Received _____ ☐ Initial Submittal

Paid _____ ☐ Revised Submittal

77012

Complete all sections of this application, including the desired meeting date and the action requested. If your project requires both UDC and Land Use application submittals, a completed Land Use Application and accompanying submittal materials are also required to be submitted.

If you need an interpreter, translator, materials in alternate formats or other accommodations to access these forms, please call the Planning Division at (608) 266-4635.

Si necesita interprete, traductor, materiales en diferentes formatos, u otro tipo de ayuda para acceder a estos formularios, por favor llame al (608) 266-4635.

Yog tias koj xav tau ib tug neeg txhais lus, tus neeg txhais ntawv, los sis xav tau cov ntaub ntawv ua lwm hom ntawv los sis lwm cov kev pab kom paub txog cov lus qhia no, thov hu rau Koog Npaj (Planning Division) (608) 266-4635.

1. Project Information

Address (list all addresses on the project site): 702 North Midvale Boulevard and 401 North Segoe Avenue and 320 Price Place

Title: Hilldale Phase Three: Buildings 200. 300. and 500 SIP Submittal

2. Application Type (check all that apply) and Requested Date

UDC meeting date requested April 26, 2023

☑ New development ☐ Alteration to an existing or previously-approved development

☐ Informational ☑ Initial Approval ☑ Final Approval

3. Project Type

☒ Project in an Urban Design District 6

☐ Project in the Downtown Core District (DC), Urban Mixed-Use District (UMX), or Mixed-Use Center District (MXC)

☐ Project in the Suburban Employment Center District (SEC), Campus Institutional District (CI), or Employment Campus District (EC)

☑ Planned Development (PD)

- ☐ General Development Plan (GDP)
- ☑ Specific Implementation Plan (SIP)

☐ Planned Multi-Use Site or Residential Building Complex

Signage

☐ Comprehensive Design Review (CDR)

☐ Modifications of Height, Area, and Setback

☐ Sign Exceptions as noted in Sec. 31.043(3), MGO

Other

☐ Please specify

_____

4. Applicant, Agent, and Property Owner Information

Applicant name 401 N Segoe LLCand Hilldale Shopping Center Company 401 North Segoe LLC. and Hilldale Shopping Center

Street address 33 Boylston Street, Suite 3000 City/State/Zip Chestnut Hill, MA 02467

Telephone 617.405.5898 Email chris.boyce@wsdevelopment.com

Project contact person Brian Munson Company Vandewalle & Associates

Street address 120 East Lakeside Street City/State/Zip Madison, WI 53715

Telephone 608.609.4410 Email bmunson@vandewalle.com

Property owner (if not applicant) _____

Street address _____ City/State/Zip _____

Telephone _____ Email _____

URBAN DESIGN COMMISSION APPROVAL PROCESS

UDC

Introduction

The City of Madison's Urban Design Commission (UDC) has been created to:

- Encourage and promote high quality in the design of new buildings, developments, remodeling, and additions so as to maintain and improve the established standards of property values within the City.
- Foster civic pride in the beauty and nobler assets of the City, and in all other ways possible assure a functionally efficient and visually attractive City in the future.

Types of Approvals

There are three types of requests considered by the UDC:

- Informational Presentation. A request for an Informational Presentation to the UDC may be requested prior to seeking any approvals to obtain early feedback and direction before undertaking detailed design efforts. Applicants should provide details on the context of the site, design concept, site and building plans, and other relevant information to help the UDC understand the proposal and provide feedback. (Does not apply to CDR's or Signage Modification requests)
- Initial Approval. Applicants may, at their discretion, request Initial Approval of a proposal by presenting preliminary design information. As part of their review, the Commission will provide feedback on the design information that should be addressed at Final Approval stage.
- Final Approval. Applicants may request Final Approval of a proposal by presenting all final project details. Recommendations or concerns expressed by the UDC in the Initial Approval must be addressed at this time.

Presentations to the Commission

The Urban Design Commission meets virtually via Zoom, typically on the second and fourth Wednesdays of each month at 4:30 p.m. Applicant presentations are strongly encouraged, although not required. Prior to the meeting, each individual speaker is required to complete an online registration form to speak at the meeting. A link to complete the online registration will be provided by staff prior to the meeting. Please note that individual presentations will be limited to a **maximum of three (3) minutes**. The pooling of time may be utilized to provide one speaker more time to present, however the additional time will be based on the number of registrants from the applicant team, i.e. two (2) applicant registrants = six (6) minutes for one (1) speaker.

Primarily, the UDC is interested in the appearance and design quality of projects. Emphasis should be given to the site plan, landscape plan, lighting plan, building elevations, exterior building materials, color scheme, and graphics. Please note that presentation slides, in a PDF file format, are required to be submitted **the Friday before** the UDC meeting.

URBAN DESIGN DEVELOPMENT PLANS CHECKLIST

UDC

The items listed below are minimum application requirements for the type of approval indicated. Please note that the UDC and/or staff may require additional information in order to have a complete understanding of the project.

1. Informational Presentation

- ☐ Locator Map
- ☐ Letter of Intent (If the project is within an Urban Design District, a summary of how the development proposal addresses the district criteria is required)
- ☐ Contextual site information, including photographs and layout of adjacent buildings/structures
- ☐ Site Plan
- ☐ Two-dimensional (2D) images of proposed buildings or structures.

Providing additional information beyond these minimums may generate a greater level of feedback from the Commission.

Requirements for All Plan Sheets

1. Title block
2. Sheet number
3. North arrow
4. Scale, both written and graphic
5. Date
6. Fully dimensioned plans, scaled at 1"= 40' or larger

*** All plans must be legible, including the full-sized landscape and lighting plans (if required)*

2. Initial Approval

- ☐ Locator Map
- ☐ Letter of Intent (If the project is within a Urban Design District, a summary of how the development proposal addresses the district criteria is required)
- ☐ Contextual site information, including photographs and layout of adjacent buildings/structures
- ☐ Site Plan showing location of existing and proposed buildings, walks, drives, bike lanes, bike parking, and existing trees over 18" diameter
- ☐ Landscape Plan and Plant List (*must be legible*)
- ☐ Building Elevations in **both** black & white and color for all building sides, including material and color callouts
- ☐ PD text and Letter of Intent (if applicable)

Providing additional information beyond these minimums may generate a greater level of feedback from the Commission.

3. Final Approval

All the requirements of the Initial Approval (see above), **plus**:

- ☐ Grading Plan
- ☐ Lighting Plan, including fixture cut sheets and photometrics plan (must be legible)
- ☐ Utility/HVAC equipment location and screening details (with a rooftop plan if roof-mounted)
- ☐ Site Plan showing site amenities, fencing, trash, bike parking, etc. (if applicable)
- ☐ PD text and Letter of Intent (if applicable)
- ☐ Samples of the exterior building materials
- ☐ Proposed sign areas and types (if applicable)

4. Signage Approval *(Comprehensive Design Review (CDR), Sign Modifications, and Sign Exceptions (per Sec. 31.043(3))*

- ☐ Locator Map
- ☐ Letter of Intent (a summary of how the proposed signage is consistent with the CDR or Signage Modifications criteria is required)
- ☐ Contextual site information, including photographs of existing signage both on site and within proximity to the project site
- ☐ Site Plan showing the location of existing signage and proposed signage, dimensioned signage setbacks, sidewalks, driveways, and right-of-ways
- ☐ Proposed signage graphics (fully dimensioned, scaled drawings, including materials and colors, and night view)
- ☐ Perspective renderings (emphasis on pedestrian/automobile scale viewsheds)
- ☐ Illustration of the proposed signage that meets Ch. 31, MGO compared to what is being requested
- ☐ Graphic of the proposed signage as it relates to what the Ch. 31, MGO would permit

5. Required Submittal Materials

☐ **Application Form**

- A completed application form is required for each UDC appearance. For projects also requiring Plan Commission approval, applicants must also have submitted an accepted application for Plan Commission consideration prior to obtaining any formal action (Initial or Final Approval) from the UDC.

☐ **Letter of Intent**

- If the project is within an Urban Design District, a summary of how the development proposal addresses the district criteria is required.
- For signage applications, a summary of how the proposed signage is consistent with the applicable Comprehensive Design Review (CDR) or Signage Modification review criteria is required.

☐ **Development Plans** (Refer to checklist on Page 4 for plan details)

☐ **Filing Fee** (Refer to Section 7 (below) for a list of application fees by request type)

☐ **Electronic Submittal**

- Complete electronic submittals must be received prior to the application deadline before an application will be scheduled for a UDC meeting. Late materials will not be accepted. All plans must be legible and scalable when reduced. Individual PDF files of each item submitted should be submitted via email to UDCapplications@cityofmadison.com. The email must include the project address, project name, and applicant name.
- Email Size Limits. Note that an individual email cannot exceed 20MB and it is the responsibility of the applicant to present files in a manner that can be accepted. Applicants who are unable to provide the materials electronically should contact the Planning Division at (608) 266-4635 for assistance.

☐ **Notification to the District Alder**

- Please provide an email to the District Alder notifying them that you are filing this UDC application. Please send this as early in the process as possible and provide a copy of that email with the submitted application.

6. Applicant Declarations

1. Prior to submitting this application, the applicant is required to discuss the proposed project with Urban Design Commission staff. This application was discussed with _____ on _____.
2. The applicant attests that all required materials are included in this submittal and understands that if any required information is not provided by the application deadline, the application will not be placed on an Urban Design Commission agenda for consideration.

Name of applicant 401 N Segoe LLCand Hilldale Shopping Center Relationship to property Owner

Authorizing signature of property owner [signature] Date 3/12/2023

Lou Masiello 8755330CAD8A43B... Senior Vice President, Asset Strategy & Dev

7. Application Filing Fees

Fee payments are due by the submittal date. Payments received after the submittal deadline may result in the submittal being scheduled for the next application review cycle. Fees may be paid in-person, via US Mail, or City drop box. If mailed, please mail to: *City of Madison Building Inspection, P.O. Box 2984, Madison, WI 53701-2984*. The City's drop box is located outside the Municipal Building at 215 Martin Luther King, Jr. Blvd. on the E Doty Street side of the building. Please make checks payable to *City Treasurer*, and include a completed application form or cover letter indicating the project location and applicant information with all checks mailed or submitted via the City's drop box.

Please consult the schedule below for the appropriate fee for your request:

☐ Urban Design Districts: $350 *(per §33.24(6) MGO)*.

☐ Minor Alteration in the Downtown Core District (DC) or Urban Mixed-Use District (UMX) : $150 *(per §33.24(6)(b) MGO)*

☐ Comprehensive Design Review: $500 *(per §31.041(3)(d)(1)(a) MGO)*

☐ Minor Alteration to a Comprehensive Sign Plan: $100 *(per §31.041(3)(d)(1)(c) MGO)*

☐ All other sign requests to the Urban Design Commission, including, but not limited to: appeals from the decisions of the Zoning Administrator, requests for Sign Modifications (of height, area, and setback), and additional sign code approvals: $300 *(per §31.041(3)(d)(2) MGO)*

A filing fee is not required for the following project applications if part of the combined application process involving both Urban Design Commission and Plan Commission:

— Project in the Downtown Core District (DC), Urban Mixed-Use District (UMX), or Mixed-Use Center District (MXC)

— Project in the Suburban Employment Center District (SEC), Campus Institutional District (CI), or Employment Campus District (EC)

— Planned Development (PD): General Development Plan (GDP) and/or Specific Implementation Plan (SIP)

— Planned Multi-Use Site or Residential Building Complex

VANDEWALLE & ASSOCIATES INC.

March 15, 2023

Heather Stouder
Department of Planning & Development
City of Madison
215 Martin Luther King, Jr. Blvd.
Madison, WI 53710-2985

RE: Hilldale Shopping Center Phase Three
701 North Midvale Boulevard & 401 North Segoe Road
Planned Unit Development: Specific Implementation Plan
Buildings 200/300/500

Dear Heather,

WS Development is please to submit the attached Specific Implementation Plan for the buildings 200/300/500 phase of reinvestment in the Hilldale Shopping Center. This document outlines the continued evolution of the shopping center, transitioning from a suburban auto oriented retail development to a vibrant mixed use community destination.

We look forward to working with the City on the review and implementation of this project.

Sincerely,



Brian Munson
Principal

120 East Lakeside Street • Madison, Wisconsin 53715 • 608.255.3988 • 608.255.0814 Fax
247 Freshwater Way, Suite 530 • Milwaukee, Wisconsin 53204 • 414.988.8631
www.vandewalle.com

Project Name:
Hilldale Shopping Center Phase 3
Buildings 200/300/500

Applicant/Owner:
401 North Segoe LLC & Hilldale Shopping Center LLC.
33 Boylston Street
Suite 3000
Chestnut Hill, MA 02467
Contact: Chris Boyce
Chris.boyce@wsdevelopment.com

Design Team:

Architects: Hacin Associates
500 Harrison Avenue
Studio 4F
Boston, MA 02118
Contact: Matthew Manke
mmanke@hacin.com

Epstein Uhen Architects
222 West Washington Avenue
Suite 650
Madison, WI 53703
Contact: Jonathan Parker
jonathanp@eua.com

Landscape Architect: Realm Collaborative
100 East Broad Street
Suite 1710
Columbus, OH 43215
Contact: Brian Bernstein
bberstein@realmcollaborative.com

Civil Engineering: Snyder & Associates
5010 Voges Road
Madison, WI 53718
Contact: Scott Anderson
sanderson@snyder-associates.com

Planning: Vandewalle & Associates
120 East Lakeside Street
Madison, WI 53715
Contact: Brian Munson
Bmunson@vandewalle.com

Site Data:

Address:	702 North Midvale Boulevard	0709-201-2101-2
	401 North Segoe Avenue	0709-201-2005-6

Parcel Size: 4.72 acres

Existing Zoning:
Planned Development: General Development Plan (PD-GDP)

Proposed Zoning:
Planned Development: Specific Implementation Plan (PD-SIP)

Project Details

Building 200

1 story retail

Gross Square Footage:	16,756 sq. ft.
Leasable Commercial Area:	14,354 sq. ft.

Building 300

3 story retail/office

Gross Square Footage	54,413 sq. ft.
Leasable Commercial Area	
1st floor:	27,343 sq. ft.
2nd floor:	19,844 sq. ft.
3rd Floor:	337 sq. ft.
	47,524 sq. ft.

Surface Parking:	234 (3 EV stalls)
Private Street Parking:	19
Bike Parking:	79

Building 500

Gross Square Footage:	162,097 sq. ft.
Residential Units	100 units
Leasable Residential Area:	87,080 sq. ft.
Leasable Commercial Area:	7,638

Parking:

Lower Level:	Standard	48 (2 EV, 8 EV ready)
	Tandem	22
First Floor:		31
		101

Bikes:

Guest (exterior)	28
Floor Mount	81
Wall Mount	49
	130

Anticipated Phasing

The project will be built in sequential steps as part of 3 phases over the course of 2-4 years.

Phase One: Building 300
Plaza
Heather Crest Reconstruction/Streetscape
Parking & Circulation

Phase Two: Building 200
Price Place Streetscape

Phase Two: Building 500
Price Place/Vernon Streetscape

TDMP

A Transportation Demand Management Plan has been created to facilitate a multi-modal transportation focus for the project. This plan illustrates that the combination of mixed-use development and sustainable multi-modal transportation options facilitate a balance approach to accessing the shopping center.

Sustainability

Sustainable initiatives will be incorporated throughout the site as part of a system wide focus on sustainability. Sustainability components under evaluation include green stormwater management techniques, green infrastructure, green building techniques, and renewable energy. The site will meet the City's EV charging and bird friendly glass ordinances. Sustainability techniques will be finalized as part of the Specific Implementation Plan stage.

Stormwater Management

The site is located in a watershed with flooding issues and is being carefully designed, in consultation with the City Engineering Department, with attention to minimum building opening elevations, door & garage placements, and stormwater management techniques. The design team is currently evaluating green roof, permeable pavers, bio-infiltration, underground storage, and underground infiltration to meet the required stormwater management and to identify any opportunities to improve the overall floor impacts on the site and surrounding neighborhood.

Green Infrastructure

The design team is evaluating building mechanicals and construction techniques to integrate sustainable components throughout the site.

Legal Description:

Proposed Lot 2 – Legal Description

Part of Lot 1, Certified Survey Map Number 12930, as recorded in volume 82 of Certified Survey Maps, on pages 160-180, as Document Number 4667665, Dane County Registry, Lots 10-11, KELAB REPLAT, as recorded in Volume 23 of Plats, on pages 41-42, as Document Number 999296, Dane County Registry, Part of Vacated Kelab Drive Document Number 4204088, Lots 5-7, UNIVERSITY HILL FARMS - COMMERCIAL RESERVE ADDITION, as recorded in Volume 21 of Plats, on pages 6-7, as Document Number 953198, Dane County Registry, all being part of the Southeast Quarter of the Northwest Quarter and part of the Southwest Quarter of the Northeast Quarter, all in Section 20, Township 7 North, Range 9 East, City of Madison, Dane County, Wisconsin, more fully described as follows:

Beginning at the Northeasterly corner of said Lot 10, KELAB REPLAT, thence S00°01'07"E along the Westerly right of way line of Price Place, 368.70 feet to a point of curvature; thence along the arc of a curve to the right through a central angle of 112°37'41", an arc length of 29.49 feet, a radius of 15.00 feet and a chord bearing S55°41'21"W, 24.96 feet to the Northerly right of way line of Vernon Boulevard and a point of curvature; thence along said Northerly right of way line and the arc of a curve to the right through a central angle of 01°44'25", an arc length of 17.62 feet, a radius of 580.00 feet and a chord bearing N65°58'42"W, 17.62 feet to a point of reverse curvature; thence continuing along said Northerly right of way line and the arc of a curve to the left through a central angle of 23°08'46", an arc length of 282.78 feet, a radius of 700.00 feet and a chord bearing N76°09'45"W, 280.86 feet to a point of reverse curvature; thence along the arc of a curve to the right through a central angle of 78°33'12", an arc length of 20.57 feet, a radius of 15.00 feet and a chord bearing N53°19'26"W, 18.99 feet to the Easterly right of way line of Segoe Road and a point of reverse curvature; thence along said Easterly right of way line and the arc of a curve to the left through a central angle of 30°11'25", an arc length of 347.38 feet, a radius of 659.27 feet and a chord bearing N24°31'33"W, 343.38 feet; thence continuing along said Easterly right of way line N39°43'03"W, 101.34 feet; thence N49°37'34"E, 26.87 feet to a point of curvature; thence along the arc of a curve to the right through a central angle of 42°55'11", an arc length of 168.55 feet, a radius of 225.00 feet and a chord bearing N71°05'10"E, 164.63 feet; thence S87°27'15"E, 385.95 feet; thence S00°01'03"E, 146.84 feet to the northerly right of way line of Price Place; thence along said Northerly right of way line S°53'25"W, 30.00 feet to the point of beginning. This description contains 205,693 square feet or 4.72 acres.



Hilldale Phase 3 Development

UDC SUBMISSION | 03.13.2023

REALM COLLABORATIVE

Site Experience Design &
Landscape Architecture

WS

Owner &
Developer

OVERALL SITE SPACES

PLACES

The public realm design considers a thoughtful definition of sub-spaces that are intuitively connected to the larger central gathering plaza, creating a well scaled and experiential pedestrian experience.

LEGEND

1. CENTRAL LAWN
2. KELAB DRIVE
3. RETAIL ALLEYS
4. PERMEABLE PAVEMENT PARKING / PLAZA
5. RAIN GARDEN GATEWAY
6. PERMEABLE PAVEMENT PARKING
7. RESIDENTIAL BLDG. ENTRIES
8. RESIDENTIAL RETAIL TERRACE
9. VERNON / SEGOE WALKWAY
10. SEGOE WALKWAY CONNECTION



PRICE PLACE DESIGN STRATEGIES

VIEW LOOKING NORTHWEST

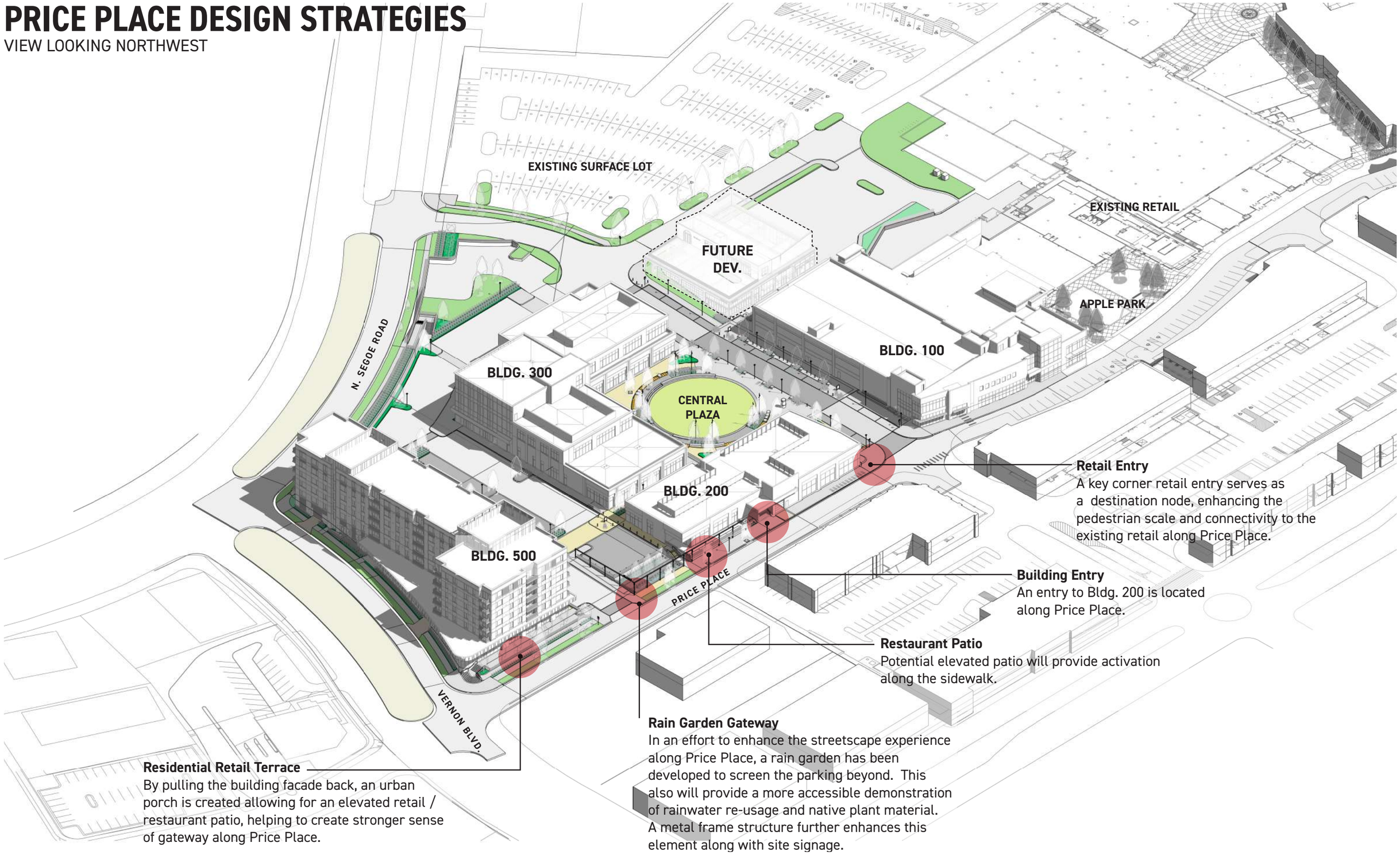

Retail Entry
A key corner retail entry serves as a destination node, enhancing the pedestrian scale and connectivity to the existing retail along Price Place.

Building Entry
An entry to Bldg. 200 is located along Price Place.

Restaurant Patio
Potential elevated patio will provide activation along the sidewalk.

Rain Garden Gateway
In an effort to enhance the streetscape experience along Price Place, a rain garden has been developed to screen the parking beyond. This also will provide a more accessible demonstration of rainwater re-usage and native plant material. A metal frame structure further enhances this element along with site signage.

Residential Retail Terrace
By pulling the building facade back, an urban porch is created allowing for an elevated retail / restaurant patio, helping to create stronger sense of gateway along Price Place.

N. SEGOE RD. DESIGN STRATEGIES

VIEW LOOKING SOUTHWEST

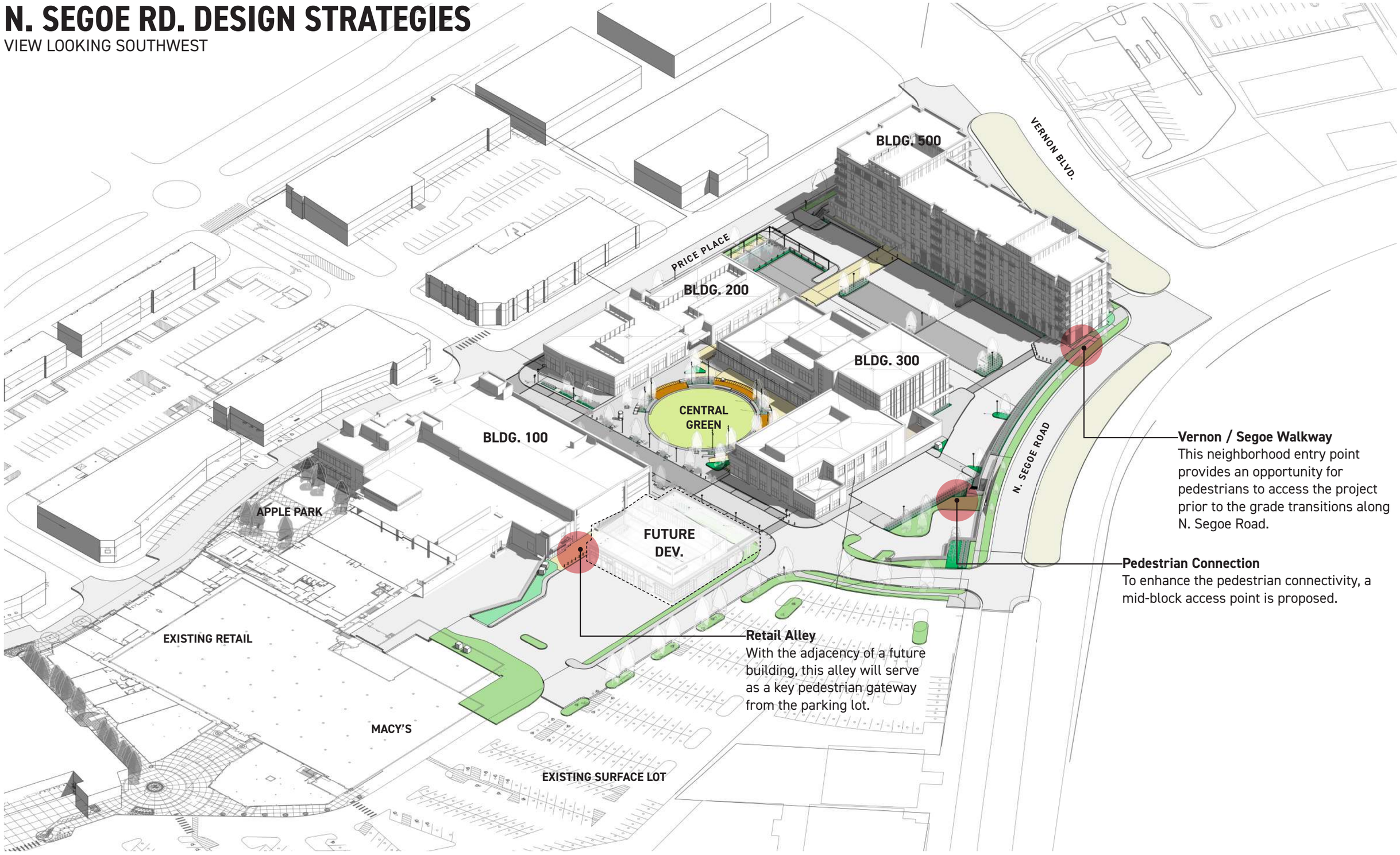

Vernon / Segoe Walkway
This neighborhood entry point provides an opportunity for pedestrians to access the project prior to the grade transitions along N. Segoe Road.

Pedestrian Connection
To enhance the pedestrian connectivity, a mid-block access point is proposed.

Retail Alley
With the adjacency of a future building, this alley will serve as a key pedestrian gateway from the parking lot.

CENTRAL PLAZA

VIEW LOOKING SOUTHEAST

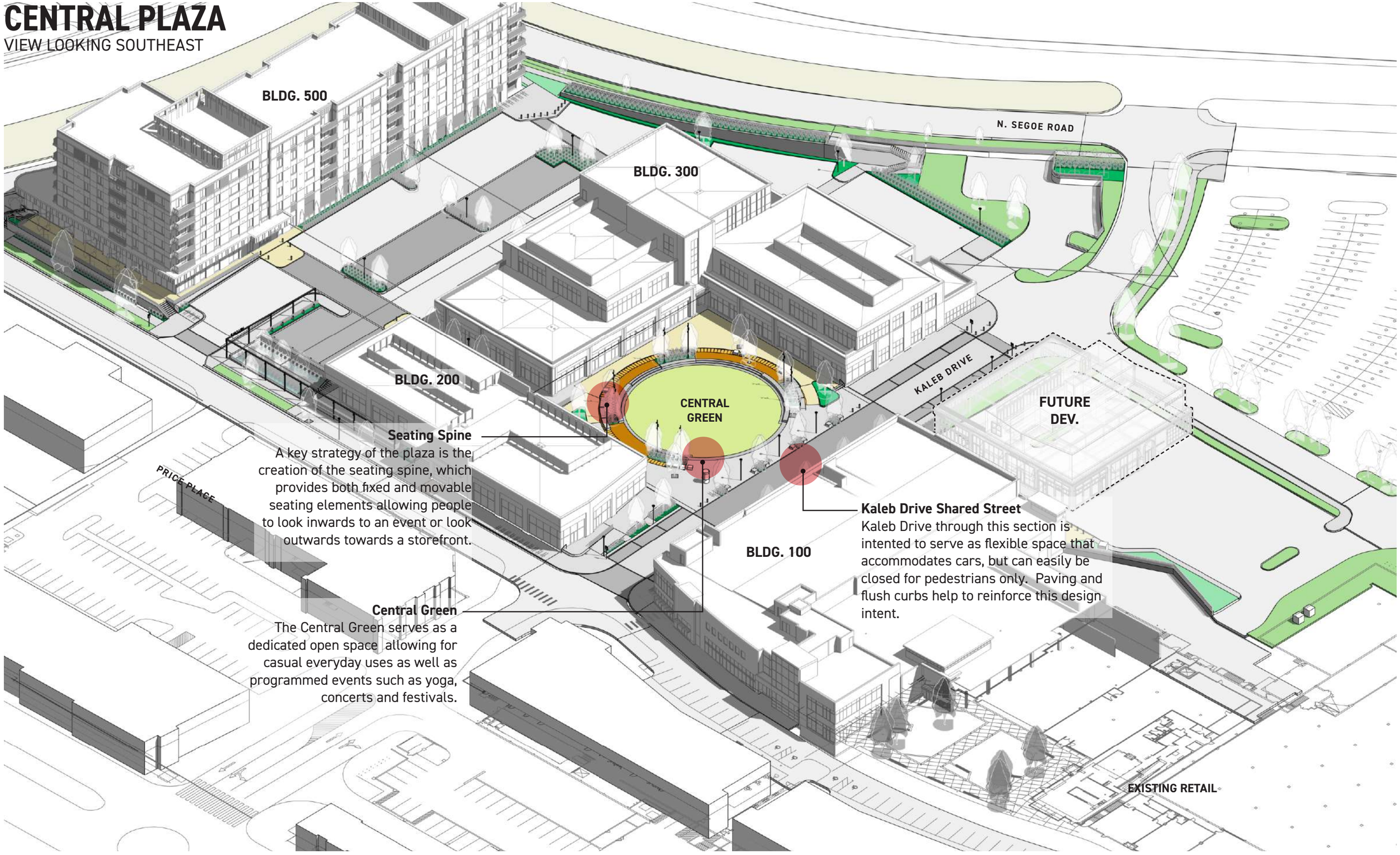

Seating Spine

A key strategy of the plaza is the creation of the seating spine, which provides both fixed and movable seating elements allowing people to look inwards to an event or look outwards towards a storefront.

Central Green

The Central Green serves as a dedicated open space allowing for casual everyday uses as well as programmed events such as yoga, concerts and festivals.

Kaleb Drive Shared Street

Kaleb Drive through this section is intented to serve as flexible space that accommodates cars, but can easily be closed for pedestrians only. Paving and flush curbs help to reinforce this design intent.


TEN
HILLDALE

CENTRAL PLAZA

PROGRAMMING - YOGA

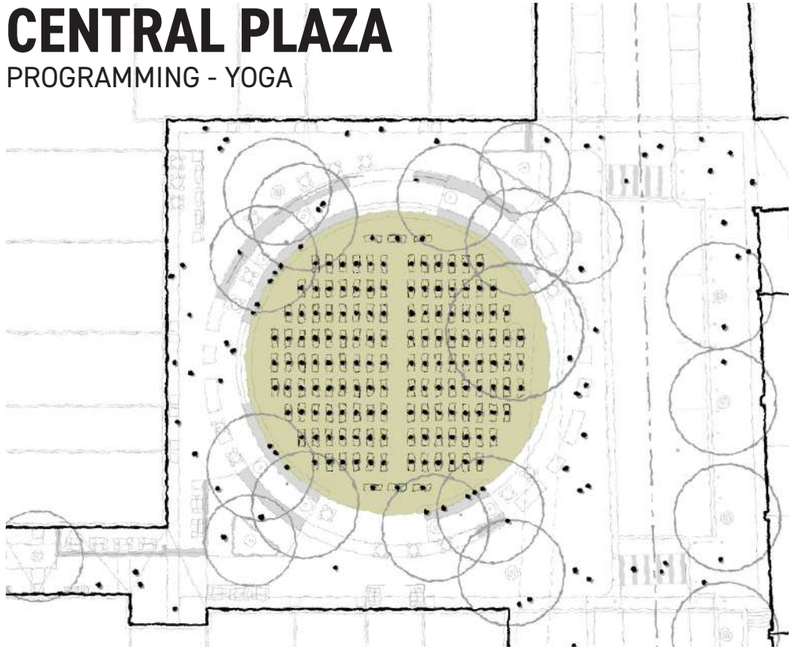

1. YOGA

APPROXIMATELY 150 MATS





CENTRAL PLAZA

PROGRAMMING - CONCERT

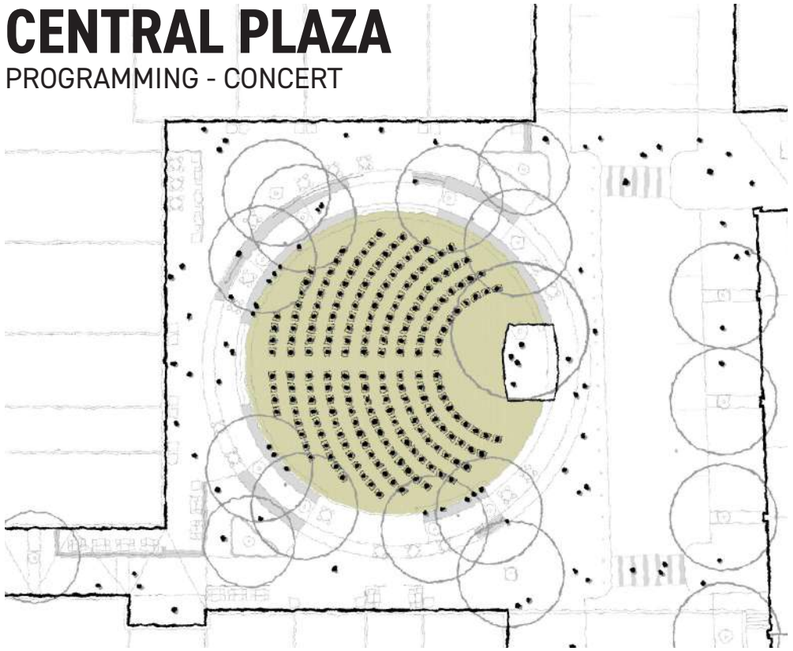

1. CONCERT + MOVIE

APPROXIMATELY 200 SEATS OR 1,800 PEOPLE AT 4SF/PERSON





CENTRAL PLAZA

PROGRAMMING - ICE SKATING

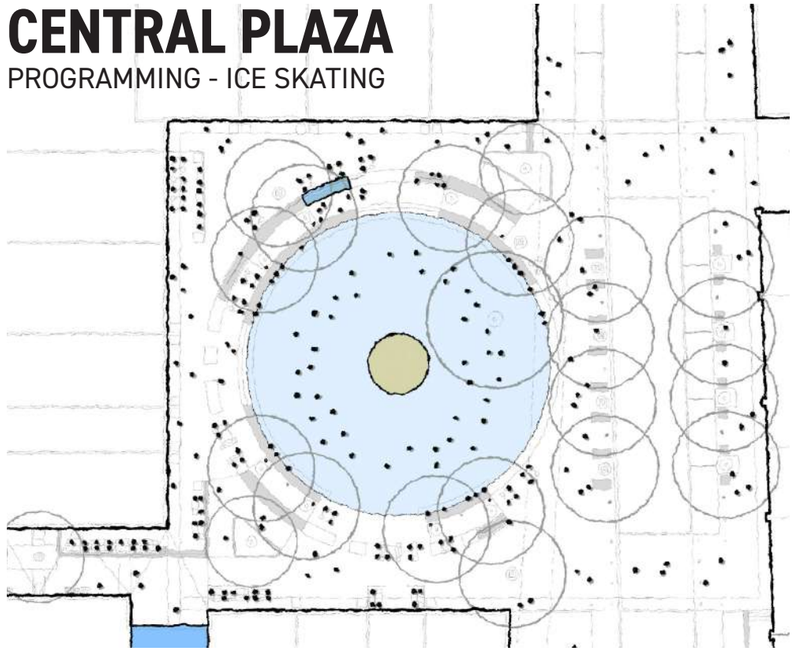

1. ICE RINK - CIRCLE

RINK SIZE IS 7,200 SF







KELAB DRIVE

THE STREET



CENTRAL PLAZA

WEST WALKWAY + SEATING



CENTRAL PLAZA

STEPS + SEATING

CENTRAL PLAZA

RETAIL + FLEXIBLE SEATING





CENTRAL PLAZA

SOUTH ‘BLOCK’ TYPE SEATING



CENTRAL PLAZA

PRECAST WALLS + SEATING

RESIDENTIAL CORNER

RETAIL ENTRY AT PRICE PLACE + VERNON



RESIDENTIAL CORNER

RETAIL ENTRY AT PRICE PLACE



BIORETENTION CORNER

RETAIL ENTRY AT PRICE PLACE



RETAIL CORNER

PRICE PLACE + KELAB DRIVE

SITE PARKING

VISITOR & RESIDENT PLAN

LEGEND

- LOT PARKING: +/- 225
- STREET PARKING: 19
- GARAGE PARKING: +/- 100
- BIKE PARKING: 95

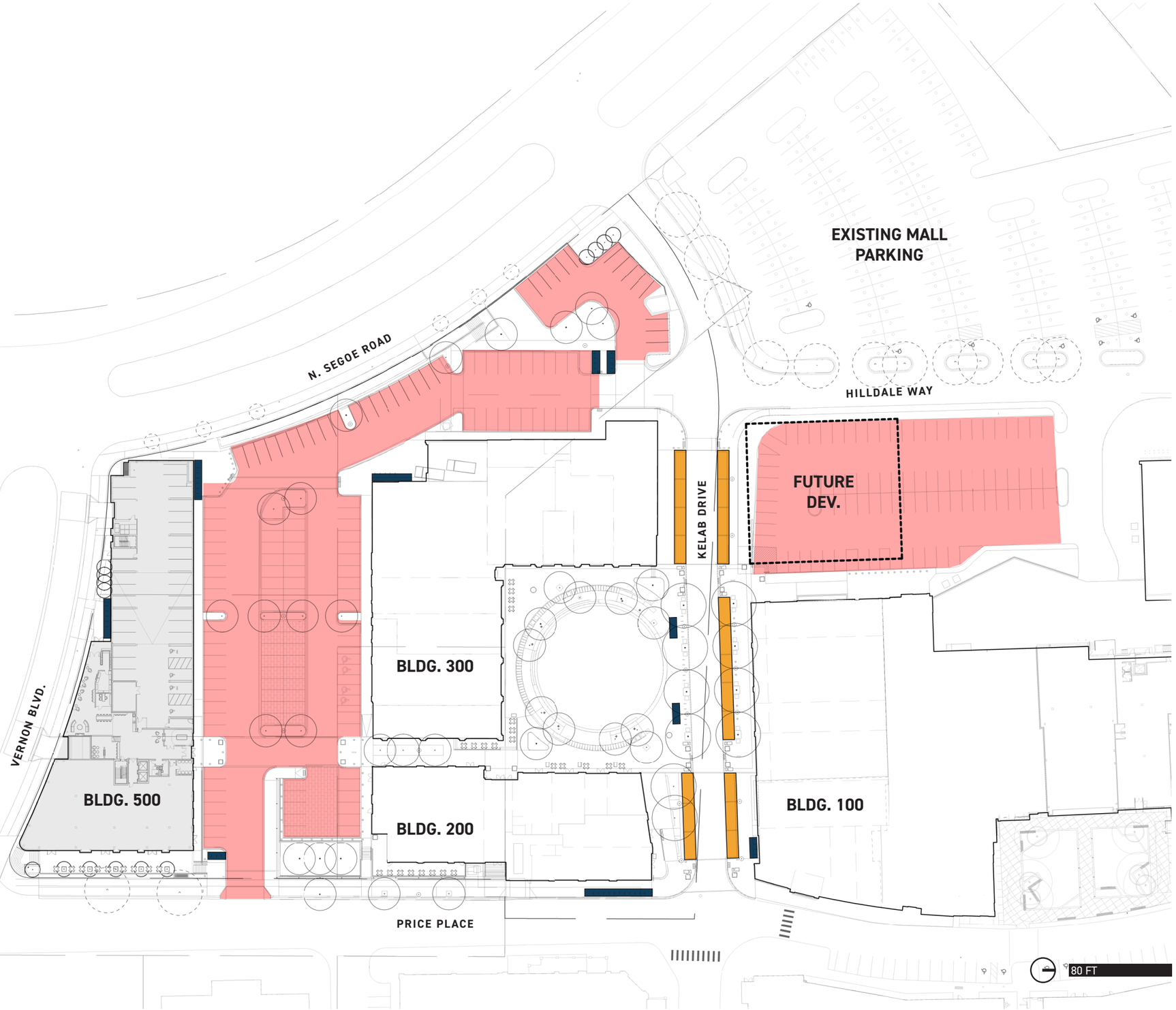

SITE STORMWATER

STRATEGY PLAN

LEGEND

- UNDERGROUND STORMWATER STORAGE
- PERMEABLE PAVERS
- BIO-BASIN
- GREEN ROOF WATER
- ROOF WATER
- STORM SEWER, VERNON
- STORM SEWER, PRICE PLACE
- PLAZA WATER + TRENCH DRAIN

GENERAL NOTES

1. THIS IS A GRAPHICAL REPRESENTATION, PLEASE SEE THE CIVIL SITE PLANS FOR DEFINED DRAINAGE AREAS AND STORM SEWER ROUTING.

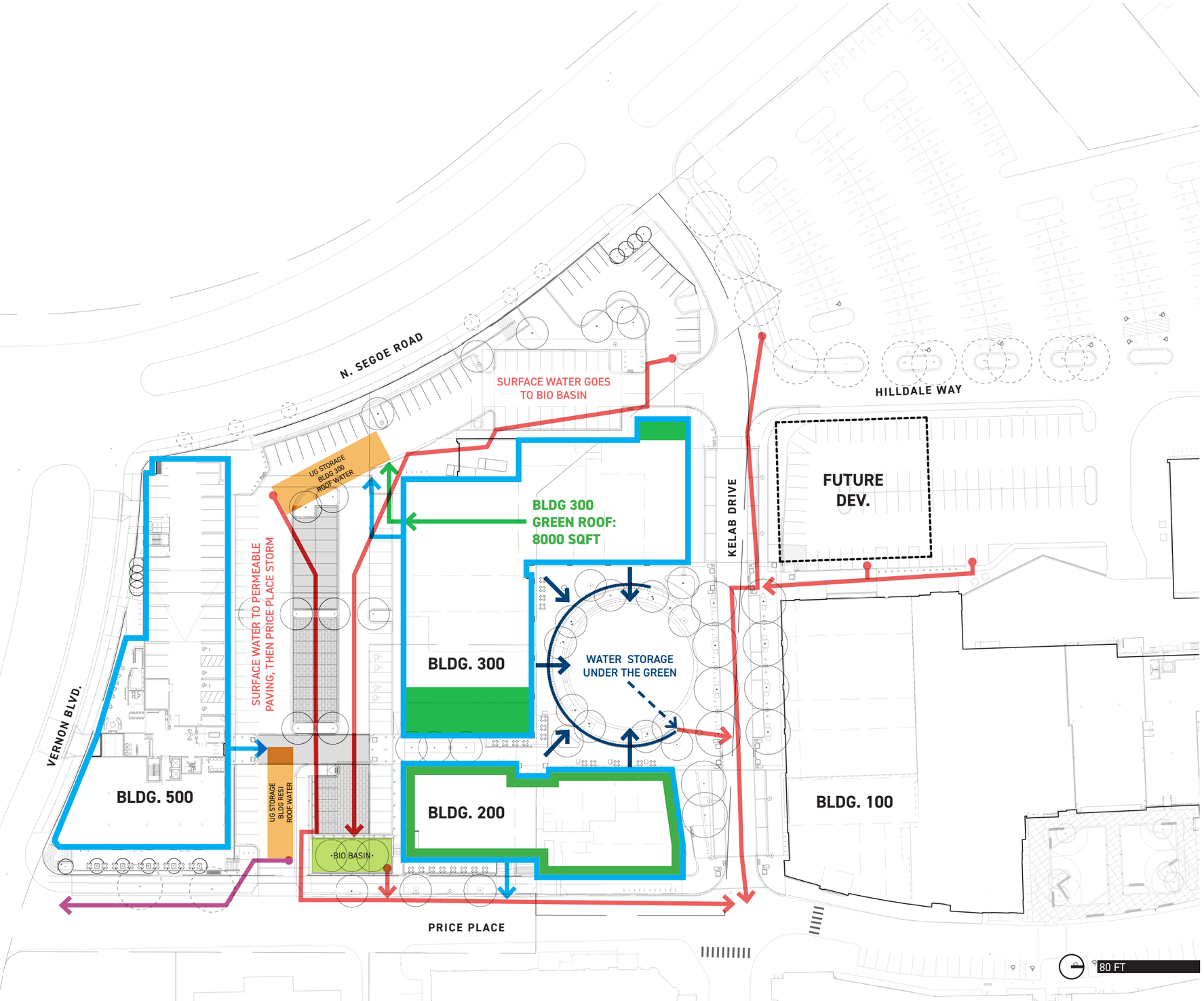

SITE HARDSCAPE

MATERIALS

LEGEND

- CONCRETE, VEHICULAR
- CONCRETE, BROOM FINISH
- PAVERS, CONCRETE UNIT PLANK
- STONE, LOCAL ACCENT BANDING
- STONE, GRANITE COBBLE

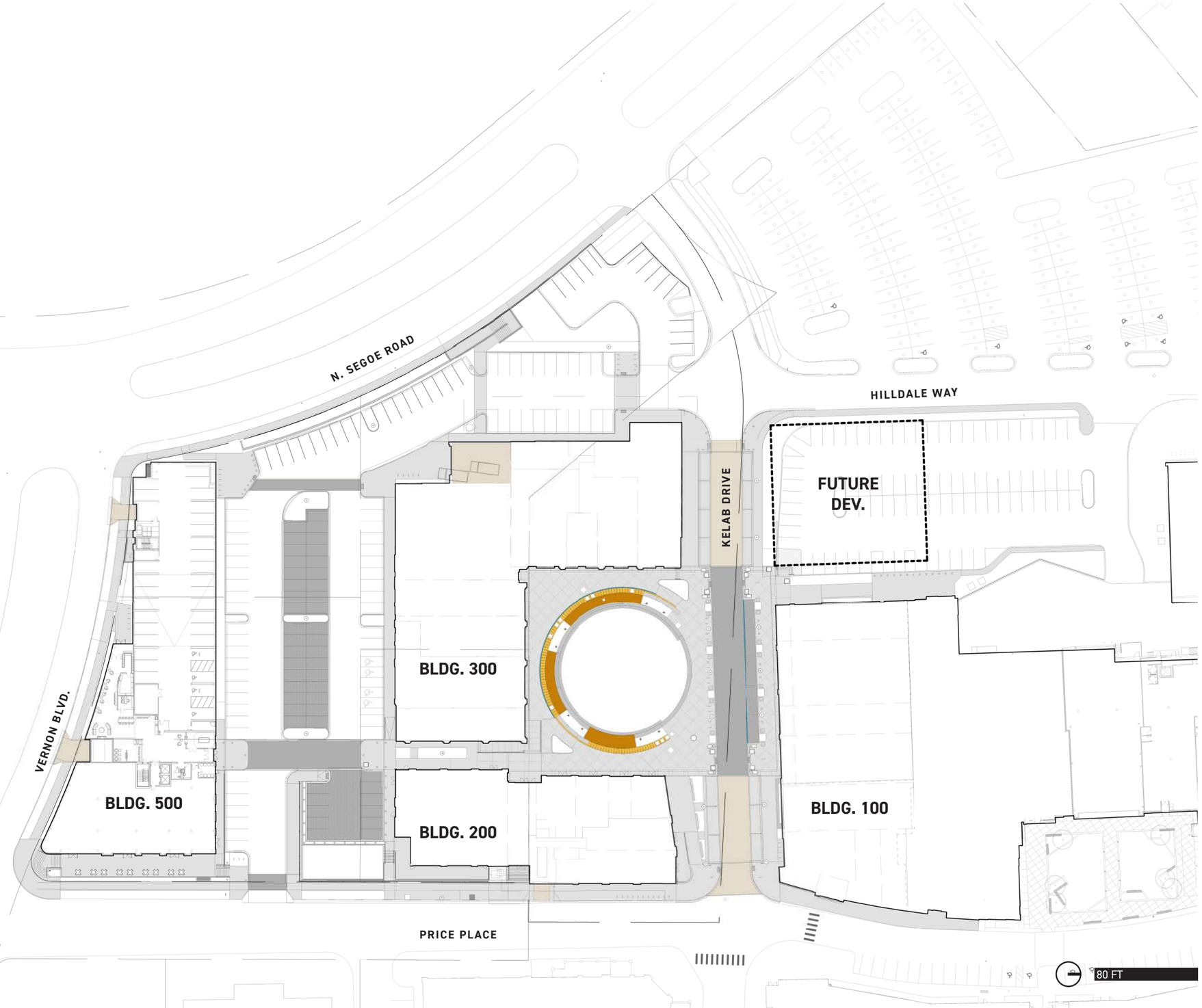

SITE LANDSCAPE

CANOPY TREES

LEGEND

- SHADE TREE, PARKING LOT - DEC. 3" CAL.
- SHADE TREE, STREET PERIMETER - DEC. 3" CAL.
- SHADE TREE, KELAB DRIVE - DEC. 5" CAL.
- SHADE TREE, PLAZA+ALLEYS - DEC. 5" CAL.
- EXISTING TREES TO REMAIN



SITE LANDSCAPE

UNDERSTORY PLANTINGS

LEGEND

- SHRUBS, EVERGREEN + DECIDUOUS
- SHRUBS, BIO RETENTION
- PERENNIALS, ORNAMENTAL GRASSES
- GROUND COVER
- LAWN, SOD
- LAWN, ARTIFICIAL



HILLDALE PHASE 3 Isometric Views of Site

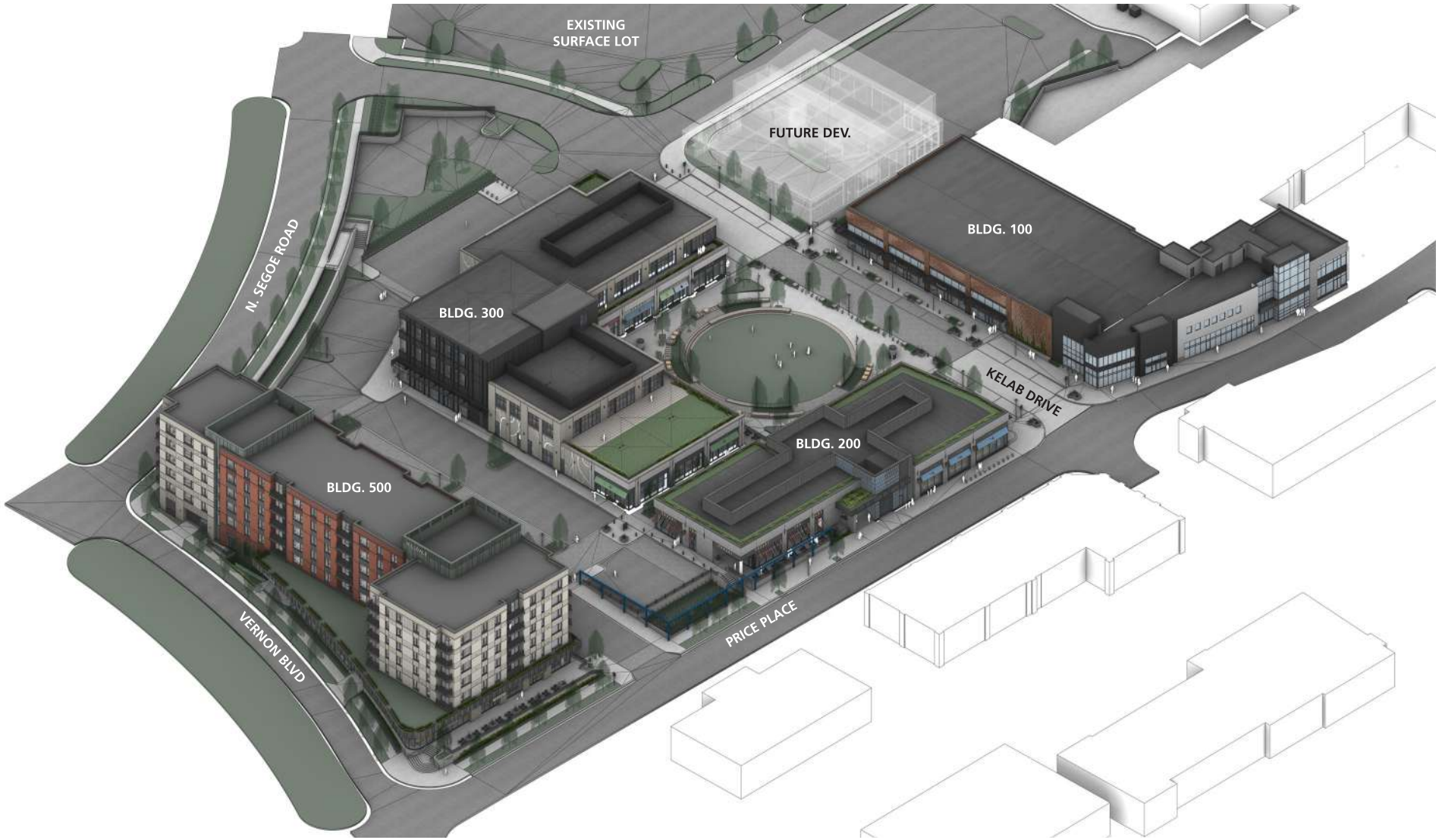

HILLDALE PHASE 3 View Looking Northwest

WSDEVELOPMENT | eua | Hacin

© 2023 HACIN ARCHITECTS LLC ALL RIGHTS RESERVED.

HILLDALE PHASE 3 Isometric Views of Site



HILLDALE PHASE 3 View Looking Southeast

© 2023 HACIN ARCHITECTS LLC ALL RIGHTS RESERVED.

WSDEVELOPMENT | eua | Hacin

HILLDALE PHASE 3 Isometric Views of Site



HILLDALE PHASE 3 View Looking Southwest

WSDEVELOPMENT | eua | Hacin

© 2023 HACIN ARCHITECTS LLC ALL RIGHTS RESERVED.

BUILDING 200 Perspective Building Elevations



BUILDING 200 East Elevation



BUILDING 200 West Elevation

© 2023 HACIN ARCHITECTS LLC ALL RIGHTS RESERVED.

WSDEVELOPMENT | eua | Hacin

BUILDING 200 Perspective Building Elevations



BUILDING 200 North Elevation



BUILDING 200 South Elevation

© 2023 HACIN ARCHITECTS LLC ALL RIGHTS RESERVED.

WSDEVELOPMENT | eu:a | Hacin

BUILDING 300 Perspective Building Elevations



BUILDING 300 North Elevation



BUILDING 300 South Elevation

WSDEVELOPMENT | eua | Hacin

© 2023 HACIN ARCHITECTS LLC ALL RIGHTS RESERVED.

BUILDING 300 Perspective Building Elevations



BUILDING 300 East Elevation



BUILDING 300 West Elevation

© 2023 HACIN ARCHITECTS LLC ALL RIGHTS RESERVED.

WSDEVELOPMENT | eu:a | Hacin

BUILDING 500 Perspective Building Elevations



BUILDING 500 North Elevation



BUILDING 500 South Elevation

WSDEVELOPMENT | eua | Hacin

© 2023 HACIN ARCHITECTS LLC ALL RIGHTS RESERVED.

BUILDING 500 Perspective Building Elevations



BUILDING 500 South Elevation



BUILDING 500 South Elevation

© 2023 HACIN ARCHITECTS LLC ALL RIGHTS RESERVED.

WSDEVELOPMENT | eu:a | Hacin

BUILDING 200 Materials

Landscape Trellis
Painted Structural Steel

"Interstate Blue" (Sherwin-Williams)

Recessed Panel Joint Trim
Painted Aluminum

"Interstate Blue" (Sherwin-Williams)

Stonecast Products, Inc.
Board Formed Precast Concrete Panel

6" thick veneer
8" tall board formed texture

(Same spec used at Cafe Hollander project on Northwest side of Hilldale)

ATAS International "Metafor"
Corrugated Metal Panel

"Anchor Grey" with concealed fasteners and color matched trim

(Painted mural artwork by landlord)

Alucobond Plus
4mm ACM Panels

"Faux Zinc Dark"



WSDEVELOPMENT | eua | Hacin

© 2023 HACIN ARCHITECTS LLC ALL RIGHTS RESERVED.

BUILDING 300 Materials



Glen-Gery
"Oyster White w/ Speck"

'Saxon' brick (3-5/8" deep, 2-1/4" tall, 15-5/8" wide)

comments: 3/8" mortar joint, stacked bond, soldier stacked bond, additional patterns with recessed coursing



Glen-Gery
"Light Grey w/ Speck"

Modular brick (3-5/8" deep, 2-1/4" tall, 7-5/8" wide)

comments: 3/8" mortar joint, stacked bond, soldier stacked bond, additional patterns with recessed coursing



Fairview Architectural Vitrabond
ZCM Zinc Composite Panels

"Charcoal Zinc"(flat finish)

Panel sizes vary. Design includes 1"x 3" Zinc battens projecting at panel joints.



Glen-Gery
"Coal City Black"

Modular brick (3-5/8" deep, 2-1/4" tall, 7-5/8" wide)

comments: 3/8" mortar joint, stacked bond, soldier stacked bond, additional patterns with recessed coursing



WSDEVELOPMENT | eua | Hacin

© 2023 HACIN ARCHITECTS LLC ALL RIGHTS RESERVED.

BUILDING 500 View from Site



BUILDING 500 View Approaching North Entry

WSDEVELOPMENT | eu:a | Hacin

© 2023 HACIN ARCHITECTS LLC ALL RIGHTS RESERVED.

BUILDING 500 Materials





Glen-Gery "Revere Pewter Velour"

Modular brick (3-5/8" deep, 2-1/4" tall, 7-5/8" wide) 3/8" mortar joint, stacked bond or soldier stacked bond, additional patterns with recessed coursing



Belden Brick Co. "Colony Blend"

Modular brick (3-5/8" deep, 2-1/4" tall, 7-5/8" wide) 3/8" mortar joint, stacked bond or soldier stacked bond, additional patterns with recessed coursing



Alucobond Plus "Sage Green"

4mm ACM panels with standing seam battens



Fairview Architectural Vitrabond ZCM

"Faux Zinc Fark" Flat Finish
Zinc composite panels

BUILDING 500 View Approaching North Entry

WSDEVELOPMENT | eu:a | Hacin

© 2023 HACIN ARCHITECTS LLC ALL RIGHTS RESERVED.

BUILDING 500 Materials Precedents





Herbert and Katherine Jacobs House Madison, WI



BMO Harris Building 310 Price Place



Grayson Building 4414 Regent Place



WSDEVELOPMENT | eua | Hacin

© 2023 HACIN ARCHITECTS LLC ALL RIGHTS RESERVED.

HILLDALE PHASE 3 Views from Site



HILLDALE PHASE 3 View from Price Place at Vernon Blvd

WSDEVELOPMENT | eua | Hacin

© 2023 HACIN ARCHITECTS LLC ALL RIGHTS RESERVED.

HILLDALE PHASE 3 Views from Site



HILLDALE PHASE 3 View from Price Place

WSDEVELOPMENT | eua | Hacin

© 2023 HACIN ARCHITECTS LLC ALL RIGHTS RESERVED.

HILLDALE PHASE 3 Views from Site



HILLDALE PHASE 3 View from Price Place at Kelab Drive

WSDEVELOPMENT | eu:a | Hacin

© 2023 HACIN ARCHITECTS LLC ALL RIGHTS RESERVED.

HILLDALE PHASE 3 Views from Site



HILLDALE PHASE 3 View from Vernon Blvd at N. Segoe Road

© 2023 HACIN ARCHITECTS LLC ALL RIGHTS RESERVED.

WSDEVELOPMENT | eu:a | Hacin

HILLDALE PHASE 3 Views from Site



HILLDALE PHASE 3 View from N. Segoe Road Entrance

© 2023 HACIN ARCHITECTS LLC ALL RIGHTS RESERVED.

WSDEVELOPMENT | eu:a | Hacin

HILLDALE PHASE 3 Views from Site



HILLDALE PHASE 3 View from N. Segoe Road Entrance

© 2023 HACIN ARCHITECTS LLC ALL RIGHTS RESERVED.

WSDEVELOPMENT | eu:a | Hacin



Hilldale - Phase 3 - Buildings 200 and 300

702 N. Midvale Blvd.
Madison, WI 53705

HILLDALE

WS

eu:a

CITY SUBMITTAL

03/13/2023 **PROJECT NUMBER: 719494-01**

© 2023 Eppstein Uhen Architects, Inc.

ABBREVIATIONS

A		**C**		**F**		**I**		**P**		**T**	
A/C	air conditioning	CLR	clear	F	female	ID	inside diameter	PJ	panel joint	T&M	time & materials
A/E	Architect/Engineer	CM	construction	F	filler	INSUL	insulation	PLAM	plastic laminate	TEMP	temperature
ACT	acoustical ceiling tile		management	FA	fire alarm	INT	interior	PLYWD	plywood	TEMP	temporary
ADDL	additional	CM	construction manager	FA	fluid-applied			PNL	panel	TER	terrazzo
ADDM	addendum	CMU	concrete masonry unit	FAB	fabric	**J**		PREFAB	prefabricated	TERB	terrazzo base
ADJ	adjustable	CO	cleanout	FC	file cabinet	JS	janitor sink	PREFIN	prefinished	TFF	top of finished floor
AFC	above finished counter	COL	column	FD	floor drain			PSI	pounds per square inch	TKBD	tackboard
		CONC	concrete	FE	fire extinguisher	**L**				TO	top of
AFF	above finished grade	CORR	corridor	FEC	fire extinguisher cabinet	LAM	laminate	PT	paint	TOB	top of beam
		CPT	carpet			LAV	lavatory	PTN	partition	TOC	top of concrete
AFG	above finished slab	CSWK	casework	FHC	fire hose cabinet	LF	linear foot			TOJ	top of joist
		CT	ceramic tile	FIN	finish	LL	live load	**Q**		TOPO	topography
AFS	above finished slab	CW	cold water	FLR	floor			QT	quarry tile	TOS	top of slab
		CTB	ceramic tile base	FM	factory mutual	**M**		QTB	quarry tile base	TOS	top of steel
ALT	alternate			FM	floor mat	MAT	material	QTY	quantity	TRNS	transom
ALUM	aluminum	**D**		FO	finished opening	MAX	maximum	QTZ	quartz	TYP	typical
APPD	approved	DBL	double	FP	fire protection	MC	modular carpet tile				
APT	apartment	DEMO	demolition	FP	fireproof	MECH	mechanical	**R**		**U**	
AP	acoustical panel	DEPT	department	FPL	fireplace	MFR	manufacturer	RB	resilient base	UNO	unless noted otherwise
ASC	above suspended ceiling	DF	drinking fountain	FRP	fiberglass reinforced plastic	MICRO	microwave	RCP	reflected ceiling plan		
		DIA	diameter			MIN	minimum	RD	roof drain	**V**	
		DP	decorative panel	FRT	fire retardant treated	MIN	minute	REBAR	reinforcing steel bars	VERT	vertical
B		DR	door	FTG	footing	MISC	miscellaneous	REC	recess	VF/CI	vendor furnished, contractor installed
BB	baseboard	DR FR	door frame			MJ	movement joint	REF	reference		
BLDG	building	DTL	detail	**G**		MO	masonry opening	REF	refrigerator	VF/OI	vendor furnished, owner installed
BLT	borrowed lite	DS	downspout	GA	gauge	MS	mop sink	RF	resilient flooring		
BLW	below	DW	dishwasher	GALV	galvanized	MTL	metal	REV	revision	VF/VI	vendor furnished, vendor installed
BPL	base plate	DWG	drawing	GB	grab bar			RFS	room finish schedule		
BO	bottom of			GC	general contractor	**N**		RO	rough opening	VNR	veneer
BOS	bottom of steel	**E**		GL	glass	N	north			VIF	verify in field
		E	east	GLU LAM	glue laminated wood	NA	not applicable	**S**			
C		EIFS	exterior insulation & finish system			NIC	not in contract	S	south	**W**	
CB	catch basin, construction bulletin	EL	elevation	GR	grade, grading	NO	number	SAN	sanitary	W	west
		EJ	expansion joint	GT	grout	NM	nominal	SC	sealed concrete	WI	with
CF/CI	contractor furnished, contractor installed	ELEC	electric	GYP BD	gypsum	NS	no scale	SC	solid core	WO	without
		ELEC	electrical			NTS	not to scale	SCHED	schedule	WC	water closet
CF/OI	contractor furnished, owner installed	ELEV	elevator	**H**				SCHED	scheduled	WC	wall covering
		EP	epoxy	HB	hose bibb	**O**		SF	square foot	WD	wood
CF/VI	contractor furnished, vendor installed	EPS	expanded polystyrene board	HC	hollow core	OA	overall	SIM	sim	WDB	wood base
				HDWE	hardware	OC	on center	SL	sidelite	WDV	wood veneer
CG	corner guard	EQ	equal	HM	hollow metal	OD	outside diameter	SNGL	single	WH	water heater
CIP	cast-in-place	ETR	existing to remain	HORIZ	horizontal	OF/CI	owner furnished, contractor installed	SS	solid surface	WP	wall protection
CNTR	counter	EXIST	existing	HSKP	housekeeping			SST	stainless steel	WP	work point
CL	centerline	EXT	exterior	HGT	height	OF/OI	owner furnished, owner installed	ST	stain	WT	window treatment
CLG	ceiling			HR	hour			ST	stair		
				HVAC	heating, ventilating & air conditioning	OF/VI	owner furnished, vendor installed	STC	sound transmission coefficient	**X**	
										XPS	extruded polystyrene board
				HW	hot water	OH DR	overhead door	STL	steel		
				HWY	highway	OPH	opposite hand	STN	stone		
						OPNG	opening	STNB	stone-base		
								STRUCT	structure		

SYMBOL LEGEND

CALLOUTS

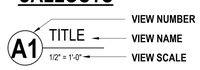

VIEW NUMBER
VIEW NAME
VIEW SCALE



ELEVATION DATUM



BUILDING SECTIONS



OTHER SECTIONS

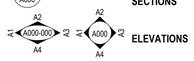

ELEVATIONS

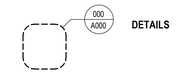

DETAILS

TAGS



PARTITION TYPE



DOOR



KEYNOTE

FURNITURE

EQUIPMENT



WINDOW



CASEWORK



FINISH PLAN



CEILING



ROOM

GRAPHICS



NORTH ARROW

DIMENSION REFERENCES

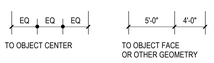

CONSTRUCTION PHASES

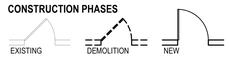

GRID AND GRID IDENTIFICATION

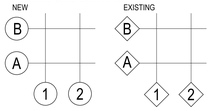

VICINITY MAP



PROJECT TEAM

ARCHITECTURAL
EPPSTEIN UHEN ARCHITECTS, INC.

309 West Johnson Street, Suite 202
Madison, WI 53703
PHONE: 608.442.5350
www.eua.com

PROJECT CONTACT: Jonathan Parker , Project Manager
DIRECT PHONE: 608.442.6681
EMAIL ADDRESS: jonathanp@eua.com

OWNER
WS DEVELOPMENT

33 Boylston Street, Suite 3000
Chestnut Hill, MA 02467
PHONE: 617.232.8900
www.wsdevelopment.com

PROJECT CONTACT: Mark Wendell , Studio Director
DIRECT PHONE: 617.232.8900
EMAIL ADDRESS: mark.wendell@wsdevelopment.com

ARCHITECTURAL
HACIN + ASSOCIATES

500 Harrison Ave, Studio 4F
Boston, MA 02118
PHONE: 617.426.0077
www.hacin.com

PROJECT CONTACT: Matthew Manke , Senior Associate
DIRECT PHONE: 617.273.2445
EMAIL ADDRESS: mmanke@hacin.com

LANDSCAPE/PLANNING
REALM COLLABORATIVE

100 E. Broad Street, Suite 1710
Columbus, OH 43215
PHONE: 614.670.7390
www.realmcollaborative.com

PROJECT CONTACT: Brian Bernstein , Principal
DIRECT PHONE: 216.647.5888
EMAIL ADDRESS: bbernstein@REALMcollaborative.com

CIVIL
SNYDER & ASSOCIATES

5010 Voges Rd.
Madison, WI 53718
PHONE: 608.838.0444
www.snyder-associates.com

PROJECT CONTACT: Scott Anderson , Civil Engineer
DIRECT PHONE: 608.838.0444
EMAIL ADDRESS: sanderson@snyder-associates.com

MEP
JDR

5525 nobel Drive, Suite 110
Madison, WI 53711
PHONE: 608.277.1728
www.jdrengineering.com

PROJECT CONTACT: Mike Klubertanz , Dir. of Elec. Eng.
DIRECT PHONE: 608.819.0175
EMAIL ADDRESS: klubertanz@jdreng.com

STRUCTURAL
OTIE

5100 Eastpark Blvd #300
Madison, WI 53718
PHONE: 608.243.6470
www.otie.com

PROJECT CONTACT: James Hall , Structural Engineer
DIRECT PHONE: 608.241.6717
EMAIL ADDRESS: jhall@oescgroup.com

SHEET INDEX

GENERAL
G000-2 INDEX

ARCHITECTURAL
A101-2 1ST FLR PLAN - OVERALL
A101A-2 1ST FLR PLAN - 200 - AREA A
A101B-3 1ST FLR PLAN - 300 - AREA B
A101C-3 1ST FLR PLAN - 300 - AREA C
A102-2 2ND FLR PLAN - OVERALL
A102B-3 2ND FLR PLAN - 300 - AREA B
A102C-3 2ND FLR PLAN - 300 - AREA C
A104-2 ROOF PLAN - OVERALL
A104A-2 ROOF PLAN - 200 - AREA A
A104B-3 ROOF PLAN - 300 - AREA B
A104C-3 ROOF PLAN - 300 - AREA C
A200-2 EXTERIOR ELEVATIONS - 200
A201-2 EXTERIOR ELEVATIONS - 200
A202-3 EXTERIOR ELEVATIONS - 300
A203-3 EXTERIOR ELEVATIONS - 300
A300-2 BUILDING SECTIONS - 200
A301-3 BUILDING SECTIONS - 300

eua
milwaukee | madison | green bay | denver | atlanta

PROJECT INFORMATION

Hilldale - Phase 3 - Buildings 200 and 300

702 N. Midvale Blvd.
Madison, WI 53705

ISSUANCE AND REVISIONS

DATE	DESCRIPTION
03/13/2023	CITY SUBMITTAL

KEY PLAN

SHEET INFORMATION

PROGRESS DOCUMENTS NOT FOR CONSTRUCTION

These documents reflect progress and intent and may be subject to change, including additional detail. These are not final construction documents and shall not be used for final bidding or construction-related purposes.

PROJECT MANAGER JP

PROJECT NUMBER 719494-01

INDEX

G000-2

© 2023 Eppstein Uhen Architects, Inc.

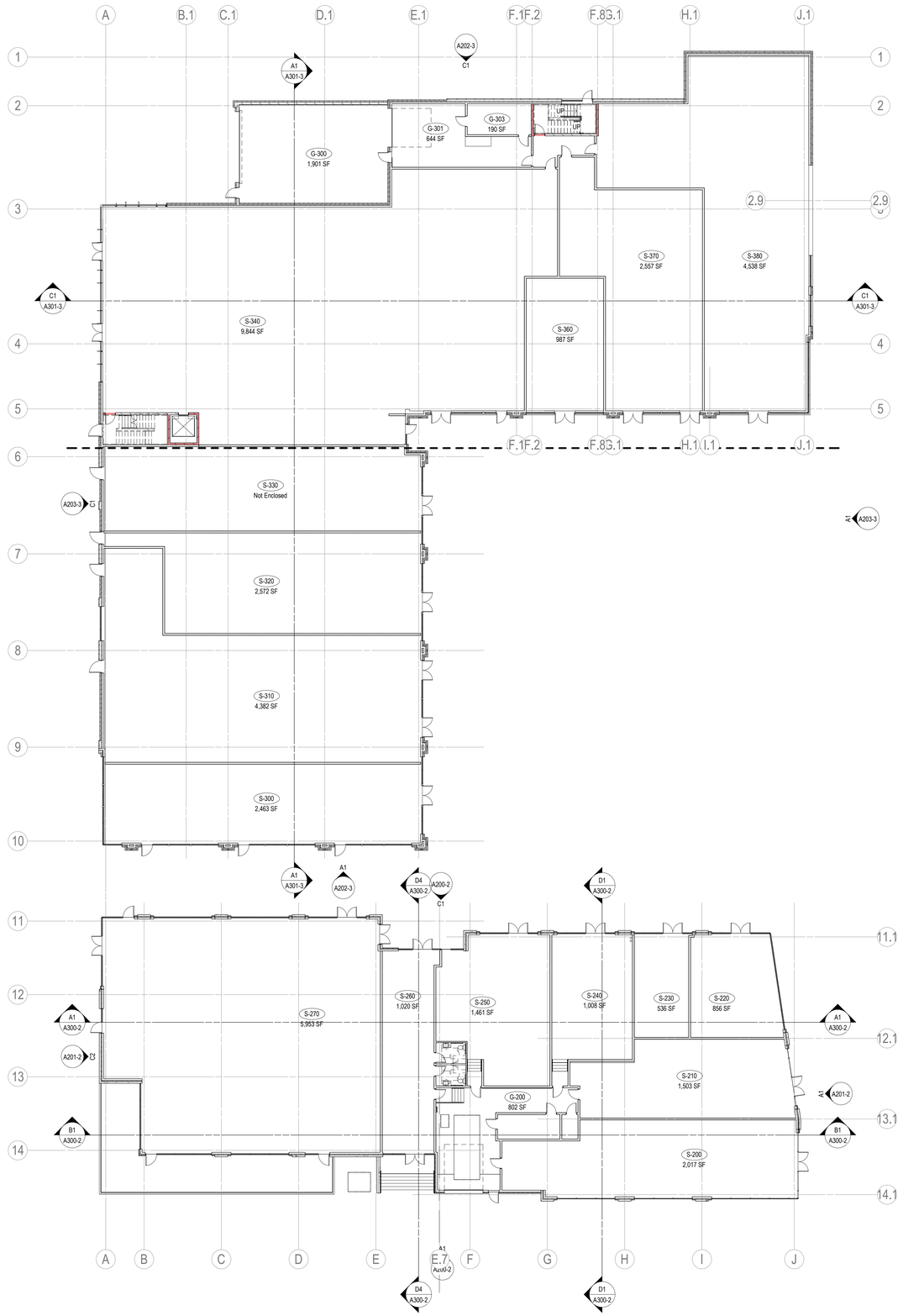

A1 1ST FLR PLAN - OVERALL
1/16" = 1'-0"

SHEET NOTES - FLOOR PLAN

1.	BEFORE BEGINNING WORK, VERIFY THE EXISTENCE AND LOCATION OF PLUMBING, MECHANICAL AND ELECTRICAL SYSTEMS AND OTHER CONSTRUCTION AFFECTING THE WORK. IF DISCREPANCIES ARE DISCOVERED, NOTIFY ARCHITECT PROMPTLY.
2.	ALL DIMENSION STRINGS ARE TO FINISH FACE OF WALL, UNLESS NOTED OTHERWISE.
3.	REFER TO STRUCTURAL DRAWINGS FOR ELEMENTS, INCLUDING BUT NOT LIMITED TO POST TENSION CABLES OR OTHER REINFORCEMENT EMBEDDED IN FLOOR SLABS, PRIOR TO CORING OR CUTTING PENETRATIONS.
4.	REFER TO SHEET A010-2 FOR REFERENCED PARTITION TYPES AND DETAILS. WALLS NOT TAGGED ON THESE PLANS SHALL BE PARTITION TYPE S9A-S11.
5.	ALL WALLS DIRECTLY BEHIND OR ADJACENT TO PLUMBING FIXTURES SHALL RECEIVE MOISTURE- AND MOLD-RESISTANT GYPSUM BOARD, UNLESS NOTED OTHERWISE.
6.	LOCATE ALL DOOR JAMBS 4" FROM ADJACENT PERPENDICULAR WALL, UNLESS NOTED OTHERWISE.
7.	PREPARE FLOOR LEVEL AND SMOOTH FOR NEW HARD SURFACE FINISHES. PATCH PENETRATIONS AND ABNORMALITIES IN CONCRETE FLOOR.
8.	PROVIDE BLOCKING AND FRAMING AS INDICATED AND AS REQUIRED TO SUPPORT FACING MATERIALS, FIXTURES, SPECIALTY ITEMS, MILLWORK AND TRIM.

KEYNOTES PER SHEET

eua
milwaukee | madison | green bay | denver | atlanta

PROJECT INFORMATION

Hilldale - Phase 3 - Buildings 200 and 300

702 N. Midvale Blvd.
Madison, WI 53705

ISSUANCE AND REVISIONS

DATE	DESCRIPTION
03/13/2023	CITY SUBMITTAL

KEY PLAN

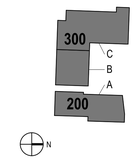

SHEET INFORMATION

PROGRESS DOCUMENTS NOT FOR CONSTRUCTION

These documents reflect progress and intent and may be subject to change, including additional detail. These are not final construction documents and shall not be used for final bidding or construction-related purposes.

PROJECT MANAGER	JP
PROJECT NUMBER	719494-01

1ST FLR PLAN - OVERALL

A101-2

© 2023 Eppstein Uhen Architects, Inc.

SHEET NOTES - FLOOR PLAN

1.	BEFORE BEGINNING WORK, VERIFY THE EXISTENCE AND LOCATION OF PLUMBING, MECHANICAL AND ELECTRICAL SYSTEMS AND OTHER CONSTRUCTION AFFECTING THE WORK. IF DISCREPANCIES ARE DISCOVERED, NOTIFY ARCHITECT PROMPTLY.
2.	ALL DIMENSION STRINGS ARE TO FINISH FACE OF WALL, UNLESS NOTED OTHERWISE.
3.	REFER TO STRUCTURAL DRAWINGS FOR ELEMENTS, INCLUDING BUT NOT LIMITED TO POST TENSION CABLES OR OTHER REINFORCEMENT EMBEDDED IN FLOOR SLABS, PRIOR TO CORING OR CUTTING PENETRATIONS.
4.	REFER TO SHEET A010-2 FOR REFERENCED PARTITION TYPES AND DETAILS. WALLS NOT TAGGED ON THESE PLANS SHALL BE PARTITION TYPE S9A-S11.
5.	ALL WALLS DIRECTLY BEHIND OR ADJACENT TO PLUMBING FIXTURES SHALL RECEIVE MOISTURE- AND MOLD-RESISTANT GYPSUM BOARD, UNLESS NOTED OTHERWISE.
6.	LOCATE ALL DOOR JAMBS 4" FROM ADJACENT PERPENDICULAR WALL, UNLESS NOTED OTHERWISE.
7.	PREPARE FLOOR LEVEL AND SMOOTH FOR NEW HARD SURFACE FINISHES. PATCH PENETRATIONS AND ABNORMALITIES IN CONCRETE FLOOR.
8.	PROVIDE BLOCKING AND FRAMING AS INDICATED AND AS REQUIRED TO SUPPORT FACING MATERIALS, FIXTURES, SPECIALTY ITEMS, MILLWORK AND TRIM.

KEYNOTES PER SHEET

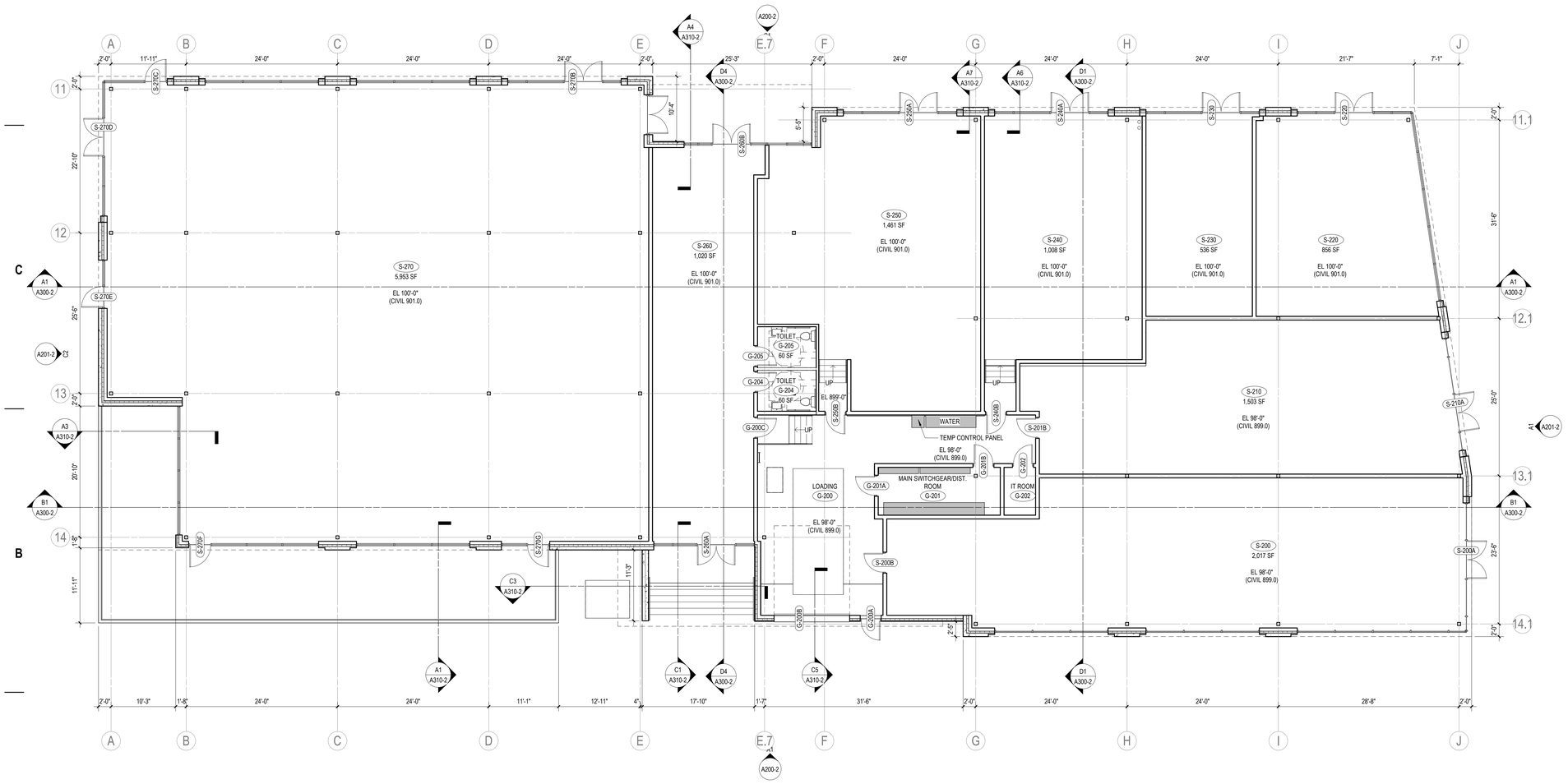

A1 1ST FLR PLAN - 200 - AREA A
1/8" = 1'-0"

milwaukee | madison | green bay | denver | atlanta

PROJECT INFORMATION

Hilldale - Phase 3 - Buildings 200 and 300

702 N. Midvale Blvd.
Madison, WI 53705

ISSUANCE AND REVISIONS

DATE	DESCRIPTION
03/13/2023	CITY SUBMITTAL

KEY PLAN

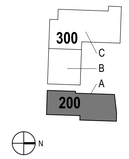

SHEET INFORMATION

PROGRESS DOCUMENTS NOT FOR CONSTRUCTION

These documents reflect progress and intent and may be subject to change, including additional detail. These are not final construction documents and shall not be used for final bidding or construction-related purposes.

PROJECT MANAGER	JP
PROJECT NUMBER	719494-01

1ST FLR PLAN - 200 - AREA A

A101A-2

© 2023 Eppstein Uhen Architects, Inc.

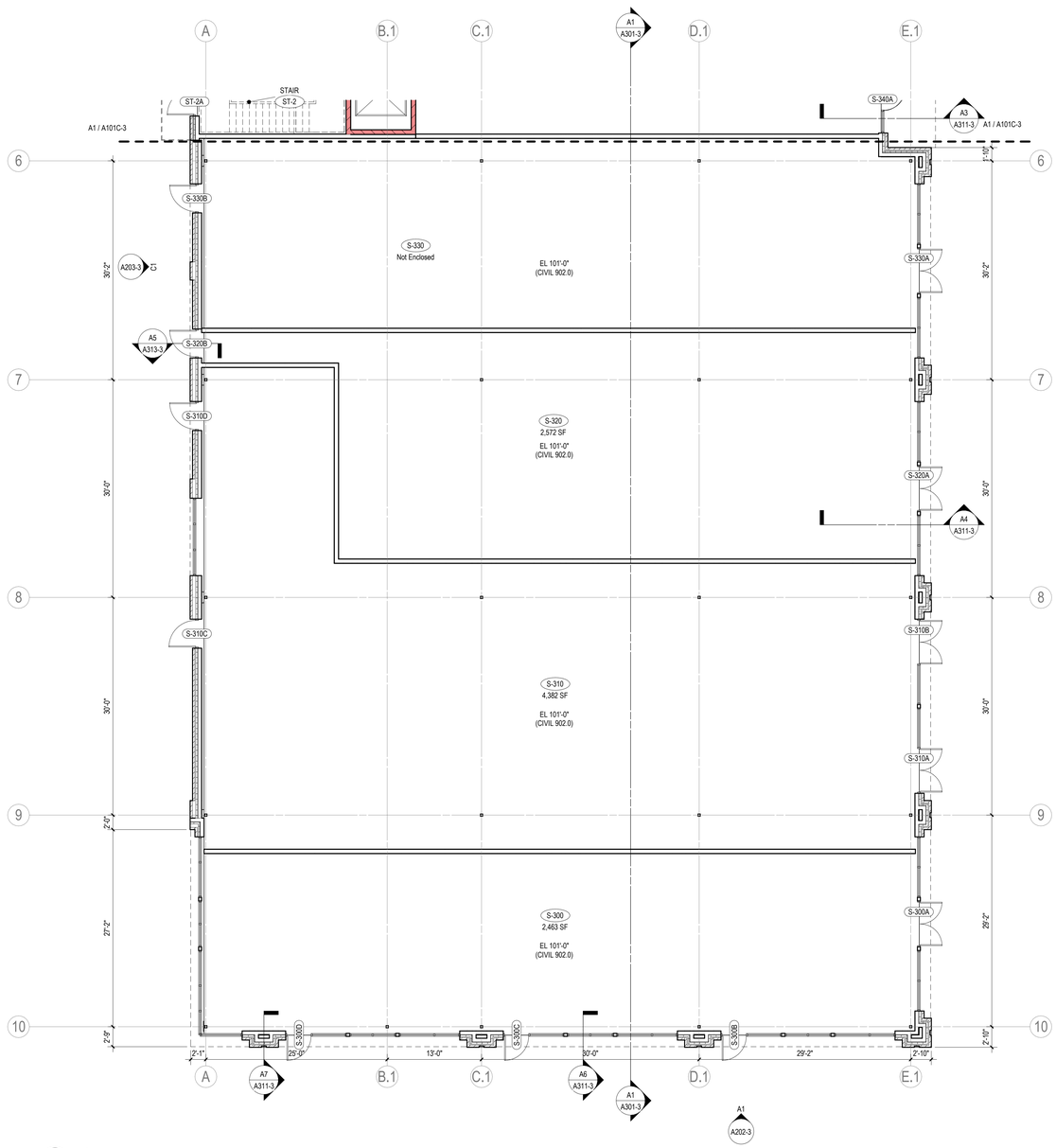

A1 1ST FLR PLAN - 300 - AREA B
1/8" = 1'-0"

SHEET NOTES - FLOOR PLAN

1.	BEFORE BEGINNING WORK, VERIFY THE EXISTENCE AND LOCATION OF PLUMBING, MECHANICAL AND ELECTRICAL SYSTEMS AND OTHER CONSTRUCTION AFFECTING THE WORK. IF DISCREPANCIES ARE DISCOVERED, NOTIFY ARCHITECT PROMPTLY.
2.	ALL DIMENSION STRINGS ARE TO FINISH FACE OF WALL, UNLESS NOTED OTHERWISE.
3.	REFER TO STRUCTURAL DRAWINGS FOR ELEMENTS, INCLUDING BUT NOT LIMITED TO POST TENSION CABLES OR OTHER REINFORCEMENT EMBEDDED IN FLOOR SLABS, PRIOR TO CORING OR CUTTING PENETRATIONS.
4.	REFER TO SHEET A010-2 FOR REFERENCED PARTITION TYPES AND DETAILS. WALLS NOT TAGGED ON THESE PLANS SHALL BE PARTITION TYPE S9A-S11.
5.	ALL WALLS DIRECTLY BEHIND OR ADJACENT TO PLUMBING FIXTURES SHALL RECEIVE MOISTURE- AND MOLD-RESISTANT GYPSUM BOARD, UNLESS NOTED OTHERWISE.
6.	LOCATE ALL DOOR JAMBS 4" FROM ADJACENT PERPENDICULAR WALL, UNLESS NOTED OTHERWISE.
7.	PREPARE FLOOR LEVEL AND SMOOTH FOR NEW HARD SURFACE FINISHES. PATCH PENETRATIONS AND ABNORMALITIES IN CONCRETE FLOOR.
8.	PROVIDE BLOCKING AND FRAMING AS INDICATED AND AS REQUIRED TO SUPPORT FACING MATERIALS, FIXTURES, SPECIALTY ITEMS, MILLWORK AND TRIM.

KEYNOTES PER SHEET

eua
milwaukee | madison | green bay | denver | atlanta

PROJECT INFORMATION

Hilldale - Phase 3 - Buildings 200 and 300

702 N. Midvale Blvd.
Madison, WI 53705

ISSUANCE AND REVISIONS

DATE	DESCRIPTION
03/13/2023	CITY SUBMITTAL

KEY PLAN

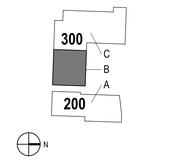

SHEET INFORMATION

PROGRESS DOCUMENTS NOT FOR CONSTRUCTION

These documents reflect progress and intent and may be subject to change, including additional detail. These are not final construction documents and shall not be used for final bidding or construction-related purposes.

PROJECT MANAGER	JP
PROJECT NUMBER	719494-01

1ST FLR PLAN - 300 - AREA B

A101B-3

© 2023 Eppstein Uhen Architects, Inc.

SHEET NOTES - FLOOR PLAN

1.	BEFORE BEGINNING WORK, VERIFY THE EXISTENCE AND LOCATION OF PLUMBING, MECHANICAL AND ELECTRICAL SYSTEMS AND OTHER CONSTRUCTION AFFECTING THE WORK. IF DISCREPANCIES ARE DISCOVERED, NOTIFY ARCHITECT PROMPTLY.
2.	ALL DIMENSION STRINGS ARE TO FINISH FACE OF WALL, UNLESS NOTED OTHERWISE.
3.	REFER TO STRUCTURAL DRAWINGS FOR ELEMENTS, INCLUDING BUT NOT LIMITED TO POST TENSION CABLES OR OTHER REINFORCEMENT EMBEDDED IN FLOOR SLABS, PRIOR TO CORING OR CUTTING PENETRATIONS.
4.	REFER TO SHEET A010-2 FOR REFERENCED PARTITION TYPES AND DETAILS. WALLS NOT TAGGED ON THESE PLANS SHALL BE PARTITION TYPE S9A-S11.
5.	ALL WALLS DIRECTLY BEHIND OR ADJACENT TO PLUMBING FIXTURES SHALL RECEIVE MOISTURE- AND MOLD-RESISTANT GYPSUM BOARD, UNLESS NOTED OTHERWISE.
6.	LOCATE ALL DOOR JAMBS 4" FROM ADJACENT PERPENDICULAR WALL, UNLESS NOTED OTHERWISE.
7.	PREPARE FLOOR LEVEL AND SMOOTH FOR NEW HARD SURFACE FINISHES. PATCH PENETRATIONS AND ABNORMALITIES IN CONCRETE FLOOR.
8.	PROVIDE BLOCKING AND FRAMING AS INDICATED AND AS REQUIRED TO SUPPORT FACING MATERIALS, FIXTURES, SPECIALTY ITEMS, MILLWORK AND TRIM.

KEYNOTES PER SHEET

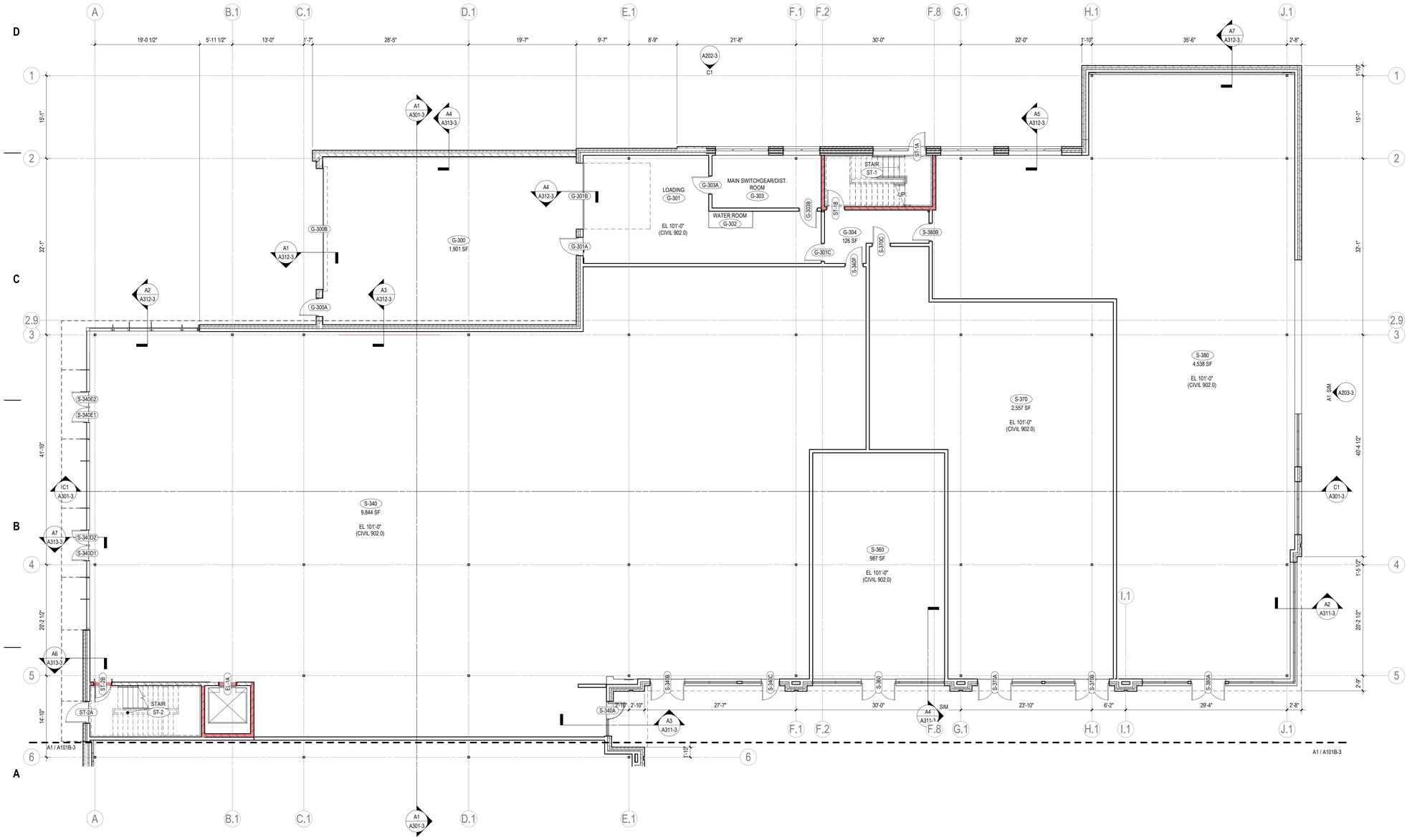

A1 1ST FLR PLAN - 300 - AREA C
1/8" = 1'-0"

milwaukee | madison | green bay | denver | atlanta

PROJECT INFORMATION

Hilldale - Phase 3 - Buildings 200 and 300

702 N. Midvale Blvd.
Madison, WI 53705

ISSUANCE AND REVISIONS

DATE	DESCRIPTION
03/13/2023	CITY SUBMITTAL

KEY PLAN

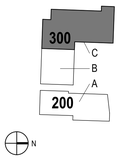

SHEET INFORMATION

PROGRESS DOCUMENTS NOT FOR CONSTRUCTION

These documents reflect progress and intent and may be subject to change, including additional detail. These are not final construction documents and shall not be used for final bidding or construction-related purposes.

PROJECT MANAGER	JP
PROJECT NUMBER	719494-01

1ST FLR PLAN - 300 - AREA C

A101C-3

© 2023 Eppstein Uhen Architects, Inc.

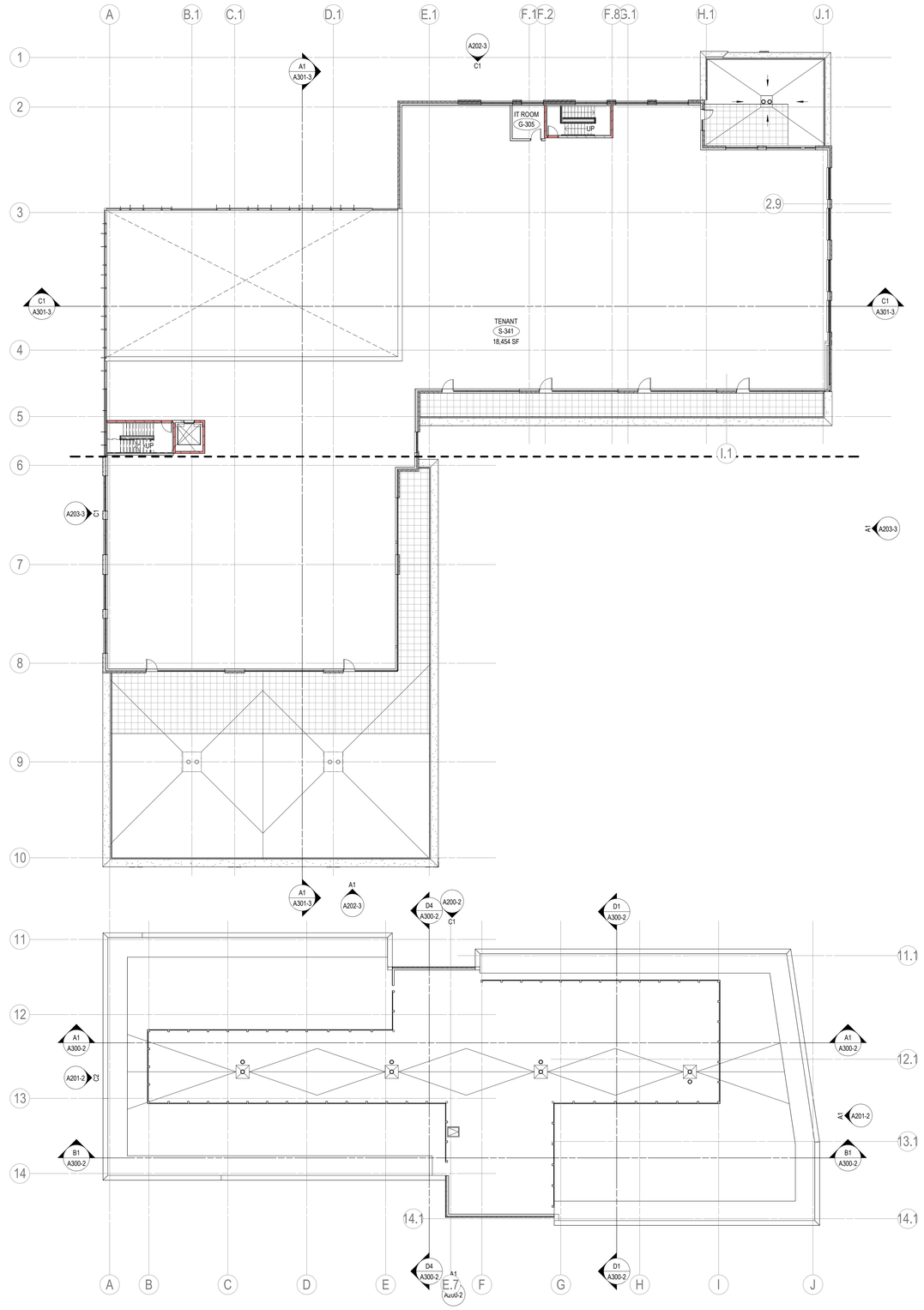

A1 2ND FLR PLAN - OVERALL
1/16" = 1'-0"

SHEET NOTES - FLOOR PLAN

1.	BEFORE BEGINNING WORK, VERIFY THE EXISTENCE AND LOCATION OF PLUMBING, MECHANICAL AND ELECTRICAL SYSTEMS AND OTHER CONSTRUCTION AFFECTING THE WORK. IF DISCREPANCIES ARE DISCOVERED, NOTIFY ARCHITECT PROMPTLY.
2.	ALL DIMENSION STRINGS ARE TO FINISH FACE OF WALL, UNLESS NOTED OTHERWISE.
3.	REFER TO STRUCTURAL DRAWINGS FOR ELEMENTS, INCLUDING BUT NOT LIMITED TO POST TENSION CABLES OR OTHER REINFORCEMENT EMBEDDED IN FLOOR SLABS, PRIOR TO CORING OR CUTTING PENETRATIONS.
4.	REFER TO SHEET A010-2 FOR REFERENCED PARTITION TYPES AND DETAILS. WALLS NOT TAGGED ON THESE PLANS SHALL BE PARTITION TYPE S9A-S11.
5.	ALL WALLS DIRECTLY BEHIND OR ADJACENT TO PLUMBING FIXTURES SHALL RECEIVE MOISTURE- AND MOLD-RESISTANT GYPSUM BOARD, UNLESS NOTED OTHERWISE.
6.	LOCATE ALL DOOR JAMBS 4" FROM ADJACENT PERPENDICULAR WALL, UNLESS NOTED OTHERWISE.
7.	PREPARE FLOOR LEVEL AND SMOOTH FOR NEW HARD SURFACE FINISHES. PATCH PENETRATIONS AND ABNORMALITIES IN CONCRETE FLOOR.
8.	PROVIDE BLOCKING AND FRAMING AS INDICATED AND AS REQUIRED TO SUPPORT FACING MATERIALS, FIXTURES, SPECIALTY ITEMS, MILLWORK AND TRIM.

KEYNOTES PER SHEET

eua
milwaukee | madison | green bay | denver | atlanta

PROJECT INFORMATION

Hilldale - Phase 3 - Buildings 200 and 300

702 N. Midvale Blvd.
Madison, WI 53705

ISSUANCE AND REVISIONS

DATE	DESCRIPTION
03/13/2023	CITY SUBMITTAL

KEY PLAN

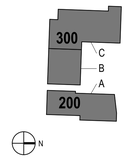

SHEET INFORMATION

PROGRESS DOCUMENTS NOT FOR CONSTRUCTION

These documents reflect progress and intent and may be subject to change, including additional detail. These are not final construction documents and shall not be used for final bidding or construction-related purposes.

PROJECT MANAGER	JP
PROJECT NUMBER	719494-01

2ND FLR PLAN - OVERALL

A102-2

© 2023 Eppstein Uhen Architects, Inc.

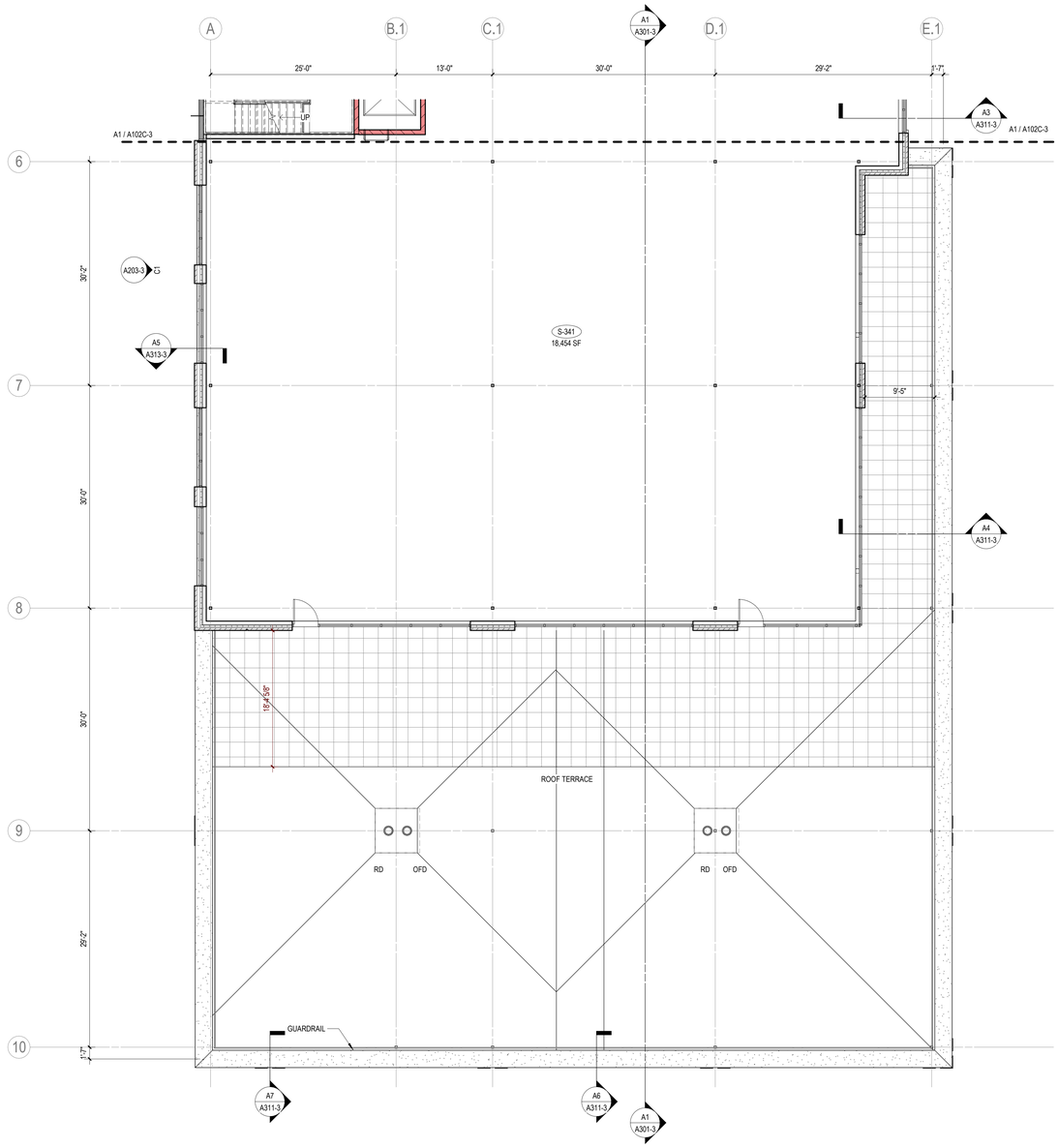

A1 2ND FLR PLAN - 300 - AREA B
1/8" = 1'-0"

SHEET NOTES - FLOOR PLAN

1.	BEFORE BEGINNING WORK, VERIFY THE EXISTENCE AND LOCATION OF PLUMBING, MECHANICAL AND ELECTRICAL SYSTEMS AND OTHER CONSTRUCTION AFFECTING THE WORK. IF DISCREPANCIES ARE DISCOVERED, NOTIFY ARCHITECT PROMPTLY.
2.	ALL DIMENSION STRINGS ARE TO FINISH FACE OF WALL, UNLESS NOTED OTHERWISE.
3.	REFER TO STRUCTURAL DRAWINGS FOR ELEMENTS, INCLUDING BUT NOT LIMITED TO POST TENSION CABLES OR OTHER REINFORCEMENT EMBEDDED IN FLOOR SLABS, PRIOR TO CORING OR CUTTING PENETRATIONS.
4.	REFER TO SHEET A010-2 FOR REFERENCED PARTITION TYPES AND DETAILS. WALLS NOT TAGGED ON THESE PLANS SHALL BE PARTITION TYPE S6A-S11.
5.	ALL WALLS DIRECTLY BEHIND OR ADJACENT TO PLUMBING FIXTURES SHALL RECEIVE MOISTURE- AND MOLD-RESISTANT GYPSUM BOARD, UNLESS NOTED OTHERWISE.
6.	LOCATE ALL DOOR JAMBS 4" FROM ADJACENT PERPENDICULAR WALL, UNLESS NOTED OTHERWISE.
7.	PREPARE FLOOR LEVEL AND SMOOTH FOR NEW HARD SURFACE FINISHES. PATCH PENETRATIONS AND ABNORMALITIES IN CONCRETE FLOOR.
8.	PROVIDE BLOCKING AND FRAMING AS INDICATED AND AS REQUIRED TO SUPPORT FACING MATERIALS, FIXTURES, SPECIALTY ITEMS, MILLWORK AND TRIM.

KEYNOTES PER SHEET

eua
milwaukee | madison | green bay | denver | atlanta

PROJECT INFORMATION

Hilldale - Phase 3 - Buildings 200 and 300

702 N. Midvale Blvd.
Madison, WI 53705

ISSUANCE AND REVISIONS

DATE	DESCRIPTION
03/13/2023	CITY SUBMITTAL

KEY PLAN

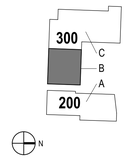

SHEET INFORMATION

PROGRESS DOCUMENTS NOT FOR CONSTRUCTION

These documents reflect progress and intent and may be subject to change, including additional detail. These are not final construction documents and shall not be used for final bidding or construction-related purposes.

PROJECT MANAGER	JP
PROJECT NUMBER	719494-01

2ND FLR PLAN - 300 - AREA B

A102B-3

© 2023 Eppstein Uhen Architects, Inc.

SHEET NOTES - FLOOR PLAN

1.	BEFORE BEGINNING WORK, VERIFY THE EXISTENCE AND LOCATION OF PLUMBING, MECHANICAL AND ELECTRICAL SYSTEMS AND OTHER CONSTRUCTION AFFECTING THE WORK. IF DISCREPANCIES ARE DISCOVERED, NOTIFY ARCHITECT PROMPTLY.
2.	ALL DIMENSION STRINGS ARE TO FINISH FACE OF WALL, UNLESS NOTED OTHERWISE.
3.	REFER TO STRUCTURAL DRAWINGS FOR ELEMENTS, INCLUDING BUT NOT LIMITED TO POST TENSION CABLES OR OTHER REINFORCEMENT EMBEDDED IN FLOOR SLABS, PRIOR TO CORING OR CUTTING PENETRATIONS.
4.	REFER TO SHEET A010-2 FOR REFERENCED PARTITION TYPES AND DETAILS. WALLS NOT TAGGED ON THESE PLANS SHALL BE PARTITION TYPE S9A-S11.
5.	ALL WALLS DIRECTLY BEHIND OR ADJACENT TO PLUMBING FIXTURES SHALL RECEIVE MOISTURE- AND MOLD-RESISTANT GYPSUM BOARD, UNLESS NOTED OTHERWISE.
6.	LOCATE ALL DOOR JAMBS 4" FROM ADJACENT PERPENDICULAR WALL, UNLESS NOTED OTHERWISE.
7.	PREPARE FLOOR LEVEL AND SMOOTH FOR NEW HARD SURFACE FINISHES. PATCH PENETRATIONS AND ABNORMALITIES IN CONCRETE FLOOR.
8.	PROVIDE BLOCKING AND FRAMING AS INDICATED AND AS REQUIRED TO SUPPORT FACING MATERIALS, FIXTURES, SPECIALTY ITEMS, MILLWORK AND TRIM.

KEYNOTES PER SHEET

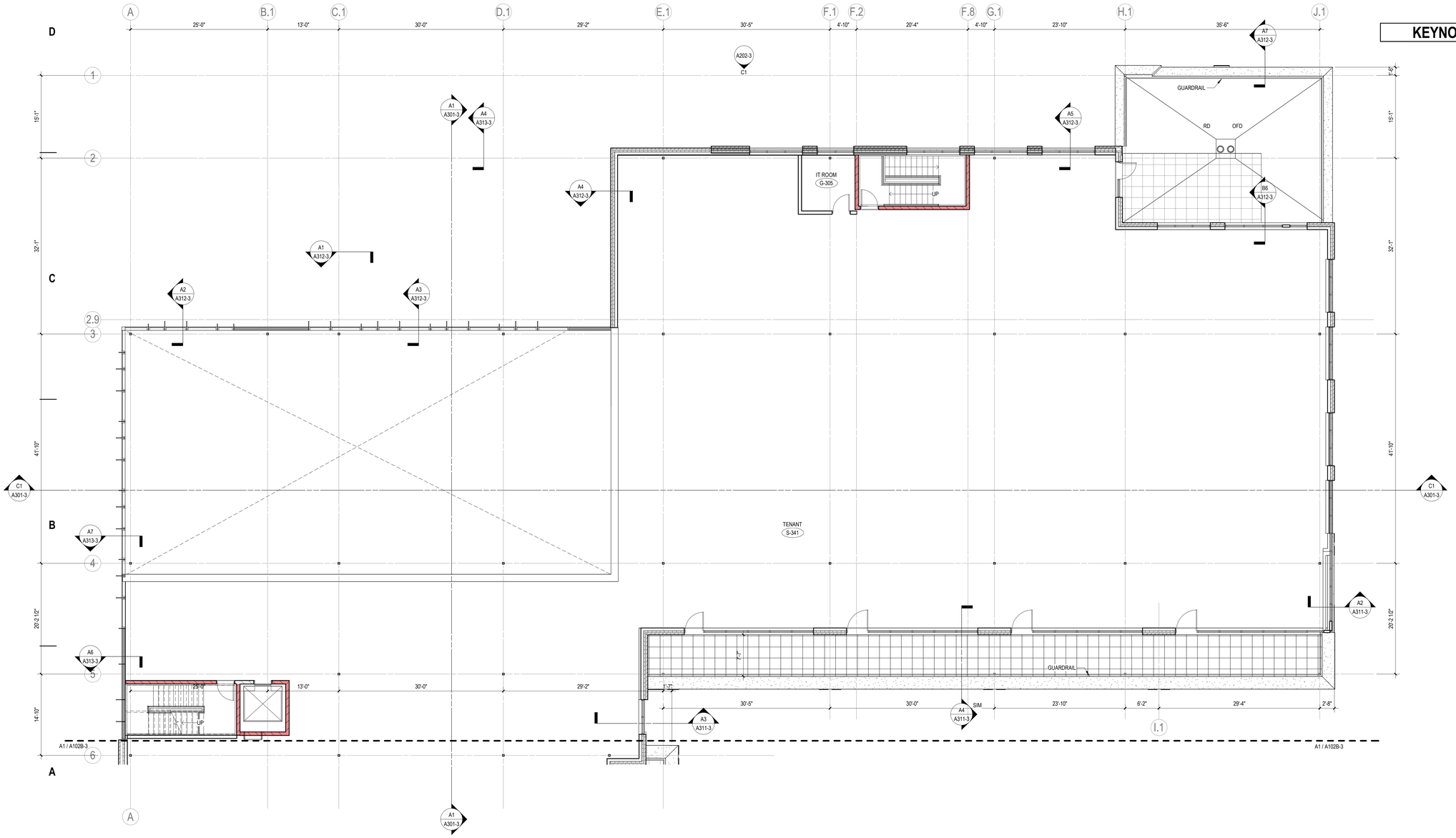

A1 2ND FLR PLAN - 300 - AREA C
1/8" = 1'-0"

milwaukee | madison | green bay | denver | atlanta

PROJECT INFORMATION

Hilldale - Phase 3 - Buildings 200 and 300

702 N. Midvale Blvd.
Madison, WI 53705

ISSUANCE AND REVISIONS

DATE	DESCRIPTION
03/13/2023	CITY SUBMITTAL

KEY PLAN

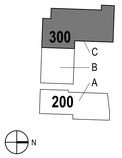

SHEET INFORMATION

PROGRESS DOCUMENTS NOT FOR CONSTRUCTION

These documents reflect progress and intent and may be subject to change, including additional detail. These are not final construction documents and shall not be used for final bidding or construction-related purposes.

PROJECT MANAGER	JP
PROJECT NUMBER	719494-01

2ND FLR PLAN - 300 - AREA C

A102C-3

© 2023 Eppstein Uhen Architects, Inc.

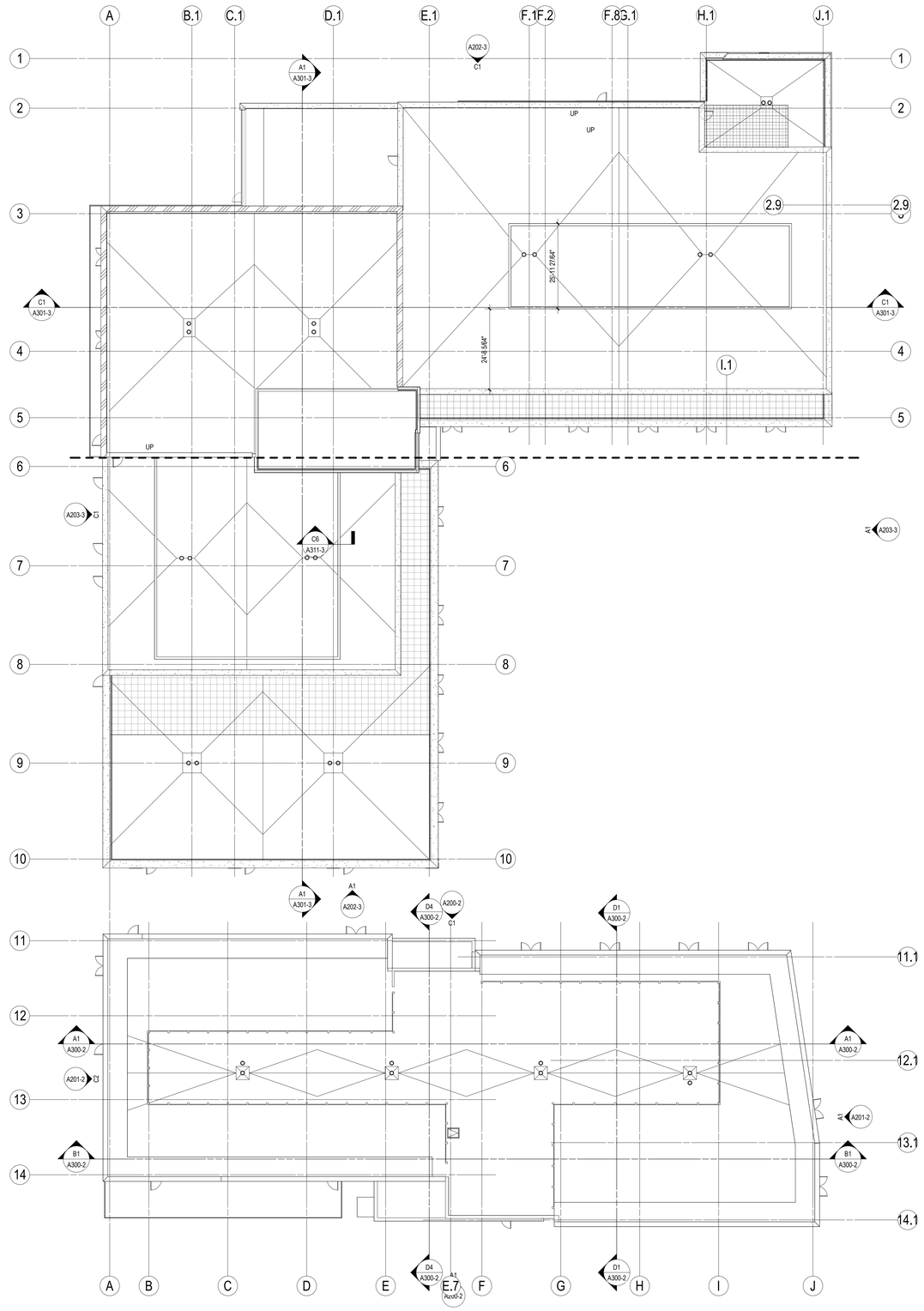

A1 ROOF PLAN - OVERALL
1/16" = 1'-0"

SHEET NOTES - ROOF PLAN

1.	ALL CONTRACTORS SHALL COORDINATE AND LOCATE ALL ROOF OPENINGS AND PENETRATIONS WITH STRUCTURAL, PLUMBING, MECHANICAL AND ELECTRICAL DRAWINGS.
2.	PROVIDE WATER TIGHT INTEGRITY AT ALL PENETRATIONS AND EQUIPMENT PER ROOFING MANUFACTURERS STANDARD DETAILS AND REQUIREMENT FOR WARRANTY AND CURRENT NRCA STANDARDS.
3.	PROVIDE TAPERED INSULATION SADDLES AND CRICKETS AT 1/4" PER FOOT AT ALL ROOF TOP EQUIPMENT AND PENETRATIONS TO ENSURE POSITIVE DRAINAGE.

ROOF PLAN LEGEND

RD	ROOF DRAIN
OFD	OVERFLOW DRAIN
DS	DOWNSPOUT
	MEMBRANE ROOF PAVER
X"	INSULATION THICKNESS
←	SLOPE DIRECTION OF ROOF & TAPERED INSULATION

SEE SHEET A000 FOR ROOF ASSEMBLY INFORMATION

KEYNOTES PER SHEET

eua

milwaukee | madison | green bay | denver | atlanta

PROJECT INFORMATION

Hilldale - Phase 3 - Buildings 200 and 300

702 N. Midvale Blvd.
Madison, WI 53705

ISSUANCE AND REVISIONS

DATE	DESCRIPTION
03/13/2023	CITY SUBMITTAL

KEY PLAN

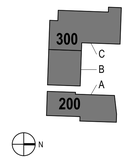

SHEET INFORMATION

PROGRESS DOCUMENTS NOT FOR CONSTRUCTION

These documents reflect progress and intent and may be subject to change, including additional detail. These are not final construction documents and shall not be used for final bidding or construction-related purposes.

PROJECT MANAGER	JP
PROJECT NUMBER	719494-01

ROOF PLAN - OVERALL

A104-2

© 2023 Eppstein Uhen Architects, Inc.

SHEET NOTES - ROOF PLAN

1.	ALL CONTRACTORS SHALL COORDINATE AND LOCATE ALL ROOF OPENINGS AND PENETRATIONS WITH STRUCTURAL, PLUMBING, MECHANICAL AND ELECTRICAL DRAWINGS.
2.	PROVIDE WATER TIGHT INTEGRITY AT ALL PENETRATIONS AND EQUIPMENT PER ROOFING MANUFACTURERS STANDARD DETAILS AND REQUIREMENT FOR WARRANTY AND CURRENT NRCA STANDARDS.
3.	PROVIDE TAPERED INSULATION SADDLES AND CRICKETS AT 1/4" PER FOOT AT ALL ROOF TOP EQUIPMENT AND PENETRATIONS TO ENSURE POSITIVE DRAINAGE.

ROOF PLAN LEGEND

RD	ROOF DRAIN
OFD	OVERFLOW DRAIN
DS	DOWNSPOUT
☐	MEMBRANE ROOF PAVER
X"	INSULATION THICKNESS
←	SLOPE DIRECTION OF ROOF & TAPERED INSULATION

SEE SHEET A000 FOR ROOF ASSEMBLY INFORMATION

KEYNOTES PER SHEET

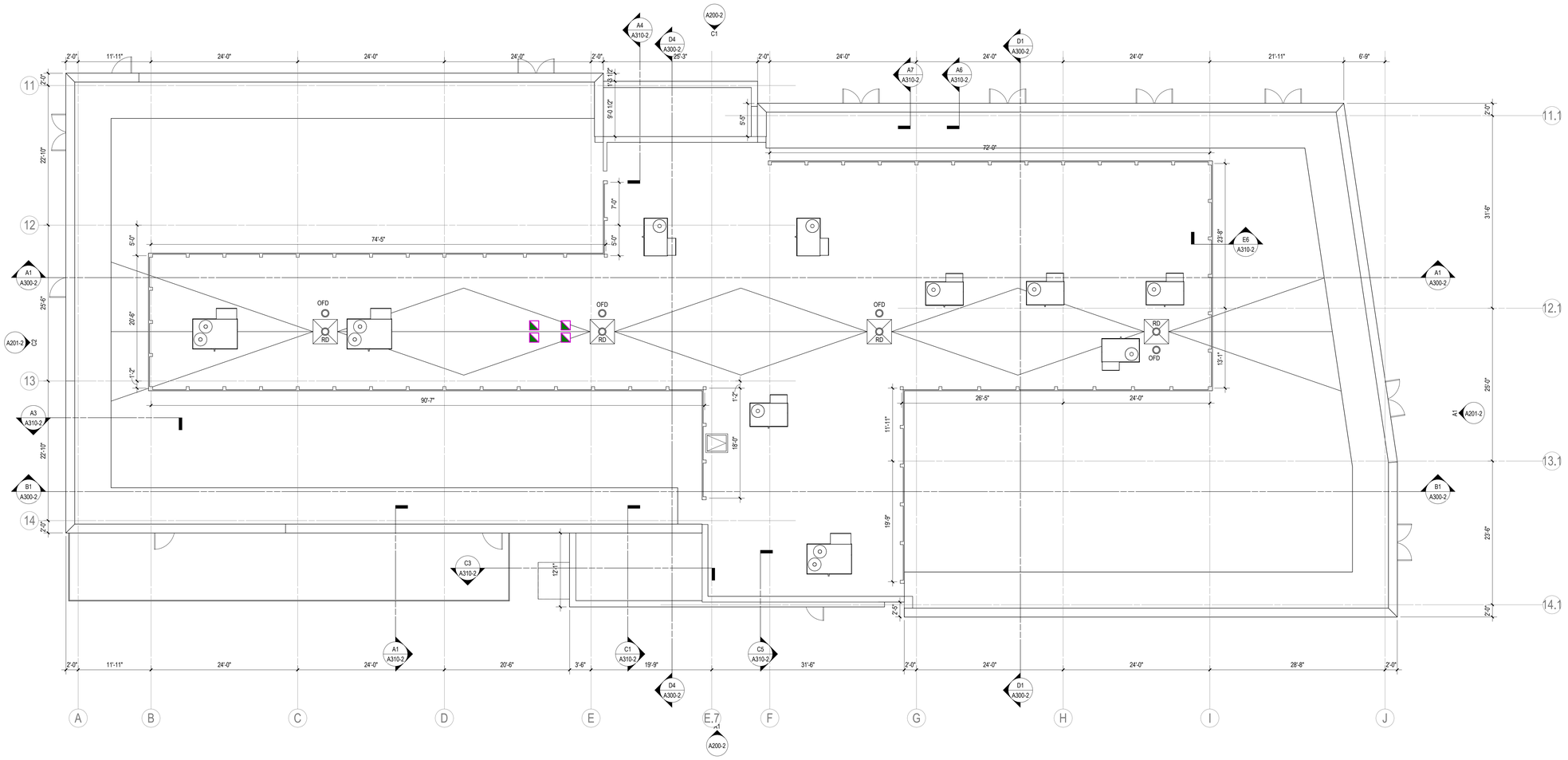

A1 ROOF PLAN - 200 - AREA A
1/8" = 1'-0"

eua
milwaukee | madison | green bay | denver | atlanta

PROJECT INFORMATION

Hilldale - Phase 3 - Buildings 200 and 300

702 N. Midvale Blvd.
Madison, WI 53705

ISSUANCE AND REVISIONS

DATE	DESCRIPTION
03/13/2023	CITY SUBMITTAL

KEY PLAN

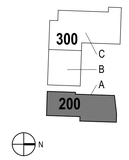

SHEET INFORMATION

PROGRESS DOCUMENTS NOT FOR CONSTRUCTION

These documents reflect progress and intent and may be subject to change, including additional detail. These are not final construction documents and shall not be used for final bidding or construction-related purposes.

PROJECT MANAGER	JP
PROJECT NUMBER	719494-01

ROOF PLAN - 200 - AREA A

A104A-2

© 2023 Eppstein Uhen Architects, Inc.

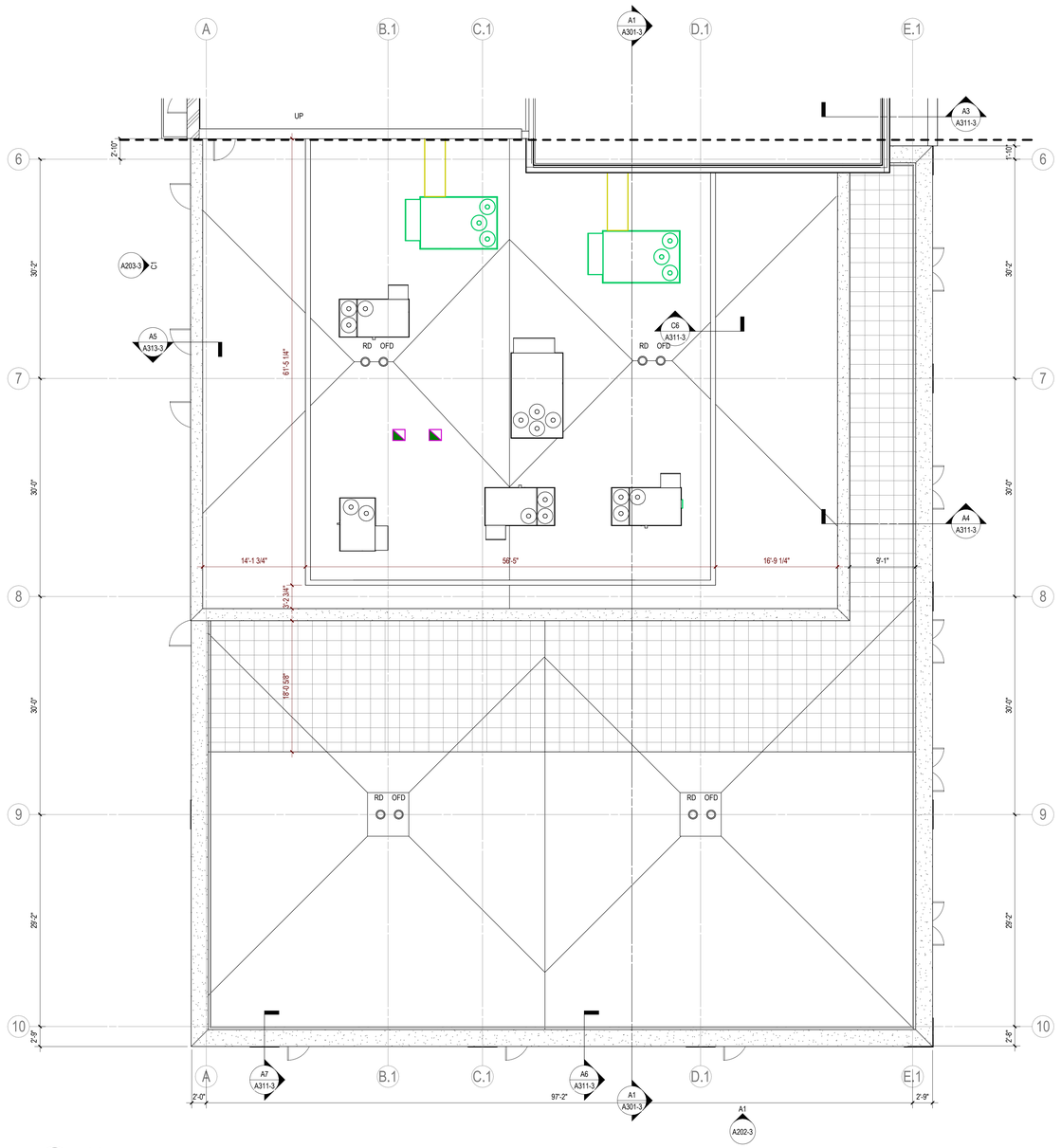

A1 ROOF PLAN - 300 - AREA B
1/8" = 1'-0"

SHEET NOTES - ROOF PLAN

1.	ALL CONTRACTORS SHALL COORDINATE AND LOCATE ALL ROOF OPENINGS AND PENETRATIONS WITH STRUCTURAL, PLUMBING, MECHANICAL AND ELECTRICAL DRAWINGS.
2.	PROVIDE WATER TIGHT INTEGRITY AT ALL PENETRATIONS AND EQUIPMENT PER ROOFING MANUFACTURERS STANDARD DETAILS AND REQUIREMENT FOR WARRANTY AND CURRENT NRCA STANDARDS.
3.	PROVIDE TAPERED INSULATION SADDLES AND CRICKETS AT 1/4" PER FOOT AT ALL ROOF TOP EQUIPMENT AND PENETRATIONS TO ENSURE POSITIVE DRAINAGE.

ROOF PLAN LEGEND

RD	ROOF DRAIN
OFD	OVERFLOW DRAIN
DS	DOWNSPOUT
☐	MEMBRANE ROOF PAVER
X"	INSULATION THICKNESS
←	SLOPE DIRECTION OF ROOF & TAPERED INSULATION

SEE SHEET A000 FOR ROOF ASSEMBLY INFORMATION

KEYNOTES PER SHEET

eua
milwaukee | madison | green bay | denver | atlanta

PROJECT INFORMATION

Hilldale - Phase 3 - Buildings 200 and 300

702 N. Midvale Blvd.
Madison, WI 53705

ISSUANCE AND REVISIONS

DATE	DESCRIPTION
03/13/2023	CITY SUBMITTAL

KEY PLAN

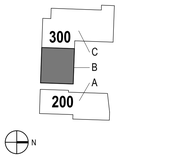

SHEET INFORMATION

PROGRESS DOCUMENTS NOT FOR CONSTRUCTION

These documents reflect progress and intent and may be subject to change, including additional detail. These are not final construction documents and shall not be used for final bidding or construction-related purposes.

PROJECT MANAGER	JP
PROJECT NUMBER	719494-01

ROOF PLAN - 300 - AREA B

A104B-3

© 2023 Eppstein Uhen Architects, Inc.

SHEET NOTES - ROOF PLAN

1.	ALL CONTRACTORS SHALL COORDINATE AND LOCATE ALL ROOF OPENINGS AND PENETRATIONS WITH STRUCTURAL, PLUMBING, MECHANICAL AND ELECTRICAL DRAWINGS.
2.	PROVIDE WATER TIGHT INTEGRITY AT ALL PENETRATIONS AND EQUIPMENT PER ROOFING MANUFACTURERS STANDARD DETAILS AND REQUIREMENT FOR WARRANTY AND CURRENT NRCA STANDARDS.
3.	PROVIDE TAPERED INSULATION SADDLES AND CRICKETS AT 1/4" PER FOOT AT ALL ROOF TOP EQUIPMENT AND PENETRATIONS TO ENSURE POSITIVE DRAINAGE.

ROOF PLAN LEGEND

RD	ROOF DRAIN
OFD	OVERFLOW DRAIN
DS	DOWNSPOUT
	MEMBRANE ROOF PAVER
X"	INSULATION THICKNESS
←	SLOPE DIRECTION OF ROOF & TAPERED INSULATION

SEE SHEET A000 FOR ROOF ASSEMBLY INFORMATION

KEYNOTES PER SHEET

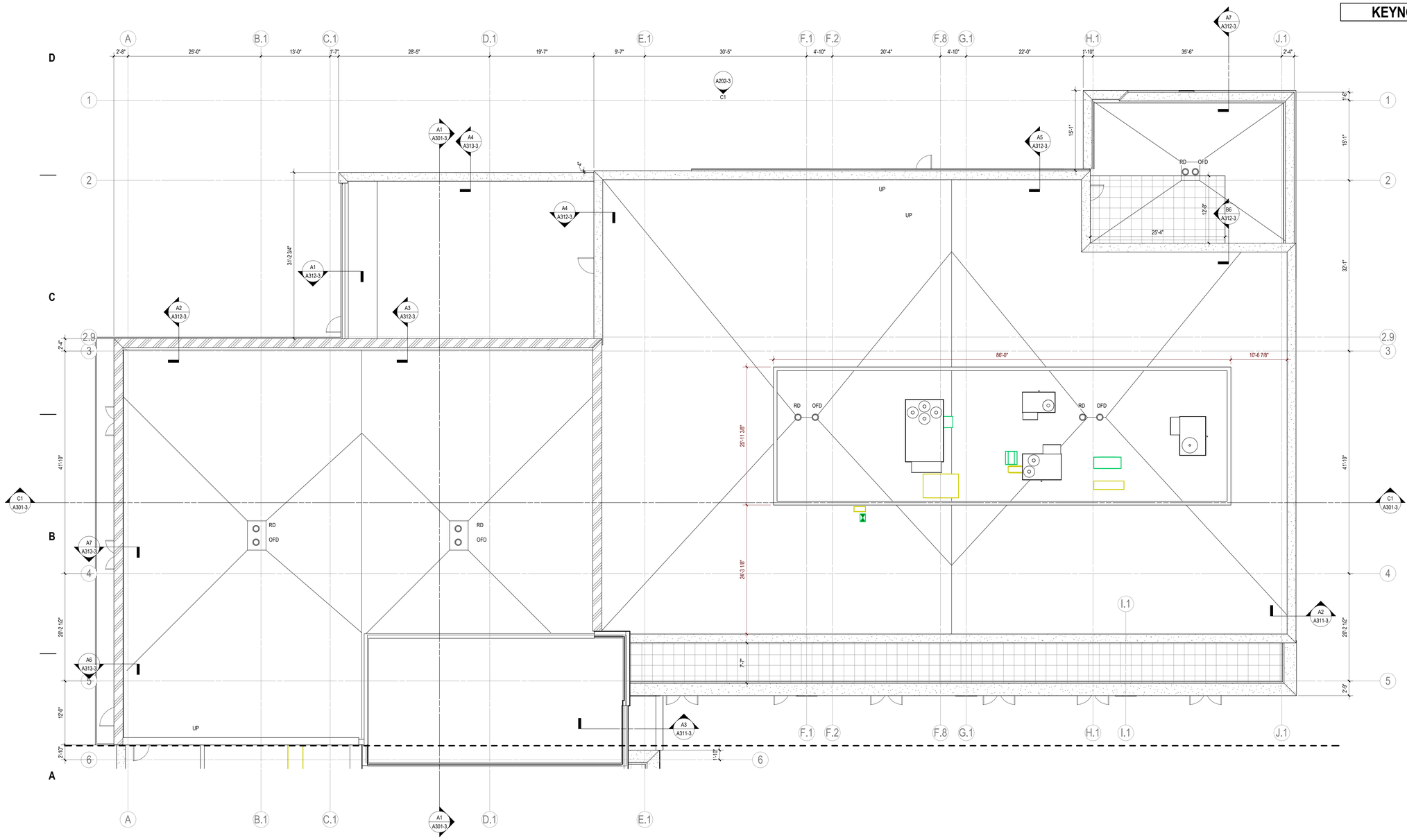

A1 ROOF PLAN - 300 - AREA C
1/8" = 1'-0"

eua

milwaukee | madison | green bay | denver | atlanta

PROJECT INFORMATION

Hilldale - Phase 3 - Buildings 200 and 300

702 N. Midvale Blvd.
Madison, WI 53705

ISSUANCE AND REVISIONS

DATE	DESCRIPTION
03/13/2023	CITY SUBMITTAL

KEY PLAN

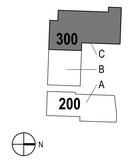

SHEET INFORMATION

PROGRESS DOCUMENTS NOT FOR CONSTRUCTION

These documents reflect progress and intent and may be subject to change, including additional detail. These are not final construction documents and shall not be used for final bidding or construction-related purposes.

PROJECT MANAGER	JP
PROJECT NUMBER	719494-01

ROOF PLAN - 300 - AREA C

A104C-3

© 2023 Eppstein Uhen Architects, Inc.

KEYNOTES PER SHEET

SHEET NOTES - EXTERIOR ELEVATIONS

1.	REFER TO BUILDING 200 AND 300 NARRATIVE FOR DETAILED EXPLANATION OF EXTERIOR MATERIALS
2.	PROVIDE CONTINUOUS SEALANT AND BACKER ROD AT ALL PRECAST CONCRETE JOINTS.
3.	ALL INSIDE AND OUTSIDE CORNERS OF PRECAST TRIM TO NOT BE MITERED.
4.	EXTERIOR SIGNAGE ON BUILDING TO BE COORDINATED AND VERIFIED WITH ARCHITECT, OWNER AND SIGNAGE VENDOR.

EXTERIOR MATERIALS

BC-1	MASONRY BRICK
BC-2	MASONRY BRICK
BC-3	MASONRY BRICK
BC-4	MASONRY BRICK
BC-5	MASONRY BRICK
BC-6	MASONRY BRICK
BC-7	MASONRY BRICK
C-1	BOARD FORMED CONCRETE
MC-1	CORRUGATED METAL
MC-2	CORRUGATED METAL
MP-1	METAL PANEL
MP-2	METAL PANEL
MP-3	METAL PANEL
MS-1	METAL PANEL SCREEN
S-1	STONE
S-2	STONE
S-3	STONE
E1	ALUMINNUM PARAPET FLASHING
E2	METAL PIPE HANDRAIL
E3	PARAPET-MOUNTED METAL PIPE HANDRAIL
E4	PERFORATED METAL SIGN BAND
E5	STEEL OVERHEAD DOOR
E6	METAL FINS (2X7) PROJECTING FROM METAL FAÇADE. MATERIAL, FINISH TO MATCH FAÇADE PANELS
E7	AWNINGS, MASONRY PAINTED BY TENANT
E8	MURAL GRAPHICS BY DEVELOPER

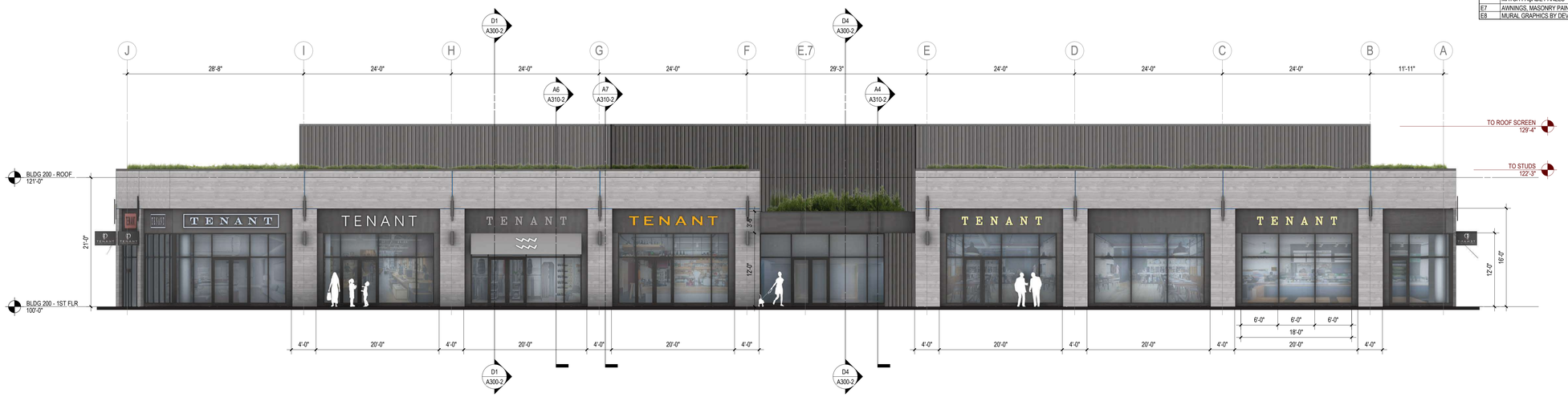

C1 WEST ELEVATION
1/8" = 1'-0"



A1 EAST ELEVATION
1/8" = 1'-0"

eua
milwaukee | madison | green bay | denver | atlanta

PROJECT INFORMATION

Hilldale - Phase 3 - Buildings 200 and 300

702 N. Midvale Blvd.
Madison, WI 53705

ISSUANCE AND REVISIONS

DATE	DESCRIPTION
03/13/2023	CITY SUBMITTAL

KEY PLAN

SHEET INFORMATION

PROGRESS DOCUMENTS NOT FOR CONSTRUCTION

These documents reflect progress and intent and may be subject to change, including additional detail. These are not final construction documents and shall not be used for final bidding or construction-related purposes.

PROJECT MANAGER	JP
PROJECT NUMBER	719494-01

EXTERIOR ELEVATIONS - 200

A200-2

© 2023 Eppstein Uhen Architects, Inc.



C2 SOUTH ELEVATION
1/8" = 1'-0"

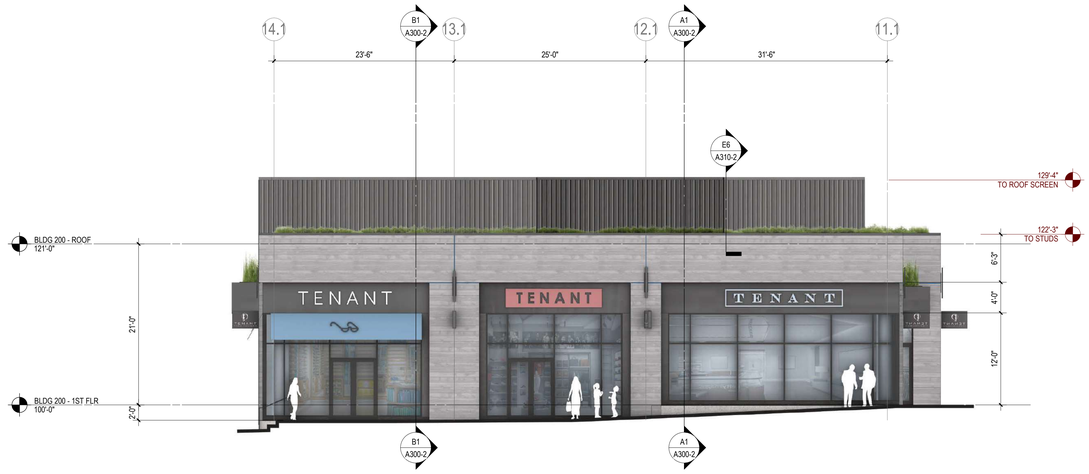

A1 NORTH ELEVATION
1/8" = 1'-0"

KEYNOTES PER SHEET

SHEET NOTES - EXTERIOR ELEVATIONS

1.	REFER TO BUILDING 200 AND 300 NARRATIVE FOR DETAILED EXPLANATION OF EXTERIOR MATERIALS
2.	PROVIDE CONTINUOUS SEALANT AND BACKER ROD AT ALL PRECAST CONCRETE JOINTS.
3.	ALL INSIDE AND OUTSIDE CORNERS OF PRECAST TRIM TO NOT BE MITERED.
4.	EXTERIOR SIGNAGE ON BUILDING TO BE COORDINATED AND VERIFIED WITH ARCHITECT, OWNER AND SIGNAGE VENDOR.

EXTERIOR MATERIALS

BC-1	MASONRY BRICK
BC-2	MASONRY BRICK
BC-3	MASONRY BRICK
BC-4	MASONRY BRICK
BC-5	MASONRY BRICK
BC-6	MASONRY BRICK
BC-7	MASONRY BRICK
C-1	BOARD FORMED CONCRETE
MC-1	CORRUGATED METAL
MC-2	CORRUGATED METAL
MP-1	METAL PANEL
MP-2	METAL PANEL
MP-3	METAL PANEL
MS-1	METAL PANEL SCREEN
S-1	STONE
S-2	STONE
S-3	STONE
E1	ALUMINNUM PARAPET FLASHING
E2	METAL PIPE HANDRAIL
E3	PARAPET-MOUNTED METAL PIPE HANDRAIL
E4	PERFORATED METAL SIGN BAND
E5	STEEL OVERHEAD DOOR
E6	METAL FINS (2X7) PROJECTING FROM METAL FAÇADE. MATERIAL, FINISH TO MATCH FAÇADE PANELS
E7	AWNINGS, MASONRY PAINTED BY TENANT
E8	MURAL GRAPHICS BY DEVELOPER

eua

milwaukee | madison | green bay | denver | atlanta

PROJECT INFORMATION

Hilldale - Phase 3 - Buildings 200 and 300

702 N. Midvale Blvd.
Madison, WI 53705

ISSUANCE AND REVISIONS

DATE	DESCRIPTION
03/13/2023	CITY SUBMITTAL

KEY PLAN

SHEET INFORMATION

PROGRESS DOCUMENTS NOT FOR CONSTRUCTION

These documents reflect progress and intent and may be subject to change, including additional detail. These are not final construction documents and shall not be used for final bidding or construction-related purposes.

PROJECT MANAGER JP

PROJECT NUMBER 719494-01

EXTERIOR ELEVATIONS - 200

A201-2

© 2023 Eppstein Uhen Architects, Inc.

KEYNOTES PER SHEET

SHEET NOTES - EXTERIOR ELEVATIONS

1.	REFER TO BUILDING 200 AND 300 NARRATIVE FOR DETAILED EXPLANATION OF EXTERIOR MATERIALS
2.	PROVIDE CONTINUOUS SEALANT AND BACKER ROD AT ALL PRECAST CONCRETE JOINTS.
3.	ALL INSIDE AND OUTSIDE CORNERS OF PRECAST TRIM TO NOT BE MITERED.
4.	EXTERIOR SIGNAGE ON BUILDING TO BE COORDINATED AND VERIFIED WITH ARCHITECT, OWNER AND SIGNAGE VENDOR.

EXTERIOR MATERIALS

BC-1	MASONRY BRICK
BC-2	MASONRY BRICK
BC-3	MASONRY BRICK
BC-4	MASONRY BRICK
BC-5	MASONRY BRICK
BC-6	MASONRY BRICK
BC-7	MASONRY BRICK
C-1	BOARD FORMED CONCRETE
MC-1	CORRUGATED METAL
MC-2	CORRUGATED METAL
MP-1	METAL PANEL
MP-2	METAL PANEL
MP-3	METAL PANEL
MS-1	METAL PANEL SCREEN
S-1	STONE
S-2	STONE
S-3	STONE
E1	ALUMINUM PARAPET FLASHING
E2	METAL PIPE HANDRAIL
E3	PARAPET-MOUNTED METAL PIPE HANDRAIL
E4	PERFORATED METAL SIGN BAND
E5	STEEL OVERHEAD DOOR
E6	METAL FINS (2X7) PROJECTING FROM METAL FAÇADE. MATERIAL, FINISH TO MATCH FAÇADE PANELS
E7	AWNINGS, MASONRY PAINTED BY TENANT
E8	MURAL GRAPHICS BY DEVELOPER



C1 WEST ELEVATION- 300
1/8" = 1'-0"



A1 EAST ELEVATION - 300
1/8" = 1'-0"

eua
milwaukee | madison | green bay | denver | atlanta

PROJECT INFORMATION

Hilldale - Phase 3 - Buildings 200 and 300

702 N. Midvale Blvd.
Madison, WI 53705

ISSUANCE AND REVISIONS

DATE	DESCRIPTION
03/13/2023	CITY SUBMITTAL

KEY PLAN

SHEET INFORMATION

PROGRESS DOCUMENTS NOT FOR CONSTRUCTION

These documents reflect progress and intent and may be subject to change, including additional detail. These are not final construction documents and shall not be used for final bidding or construction-related purposes.

PROJECT MANAGER	JP
PROJECT NUMBER	719494-01

EXTERIOR ELEVATIONS - 300

A202-3

© 2023 Eppstein Uhen Architects, Inc.

KEYNOTES PER SHEET

SHEET NOTES - EXTERIOR ELEVATIONS

1.	REFER TO BUILDING 200 AND 300 NARRATIVE FOR DETAILED EXPLANATION OF EXTERIOR MATERIALS
2.	PROVIDE CONTINUOUS SEALANT AND BACKER ROD AT ALL PRECAST CONCRETE JOINTS.
3.	ALL INSIDE AND OUTSIDE CORNERS OF PRECAST TRIM TO NOT BE MITERED.
4.	EXTERIOR SIGNAGE ON BUILDING TO BE COORDINATED AND VERIFIED WITH ARCHITECT, OWNER AND SIGNAGE VENDOR.

EXTERIOR MATERIALS

BC-1	MASONRY BRICK
BC-2	MASONRY BRICK
BC-3	MASONRY BRICK
BC-4	MASONRY BRICK
BC-5	MASONRY BRICK
BC-6	MASONRY BRICK
BC-7	MASONRY BRICK
C-1	BOARD FORMED CONCRETE
MC-1	CORRUGATED METAL
MC-2	CORRUGATED METAL
MP-1	METAL PANEL
MP-2	METAL PANEL
MP-3	METAL PANEL
MS-1	METAL PANEL SCREEN
S-1	STONE
S-2	STONE
S-3	STONE
E1	ALUMINIUM PARAPET FLASHING
E2	METAL PIPE HANDRAIL
E3	PARAPET-MOUNTED METAL PIPE HANDRAIL
E4	PERFORATED METAL SIGN BAND
E5	STEEL OVERHEAD DOOR
E6	METAL FINS (2X7) PROJECTING FROM METAL FAÇADE. MATERIAL, FINISH TO MATCH FAÇADE PANELS
E7	AWNINGS, MASONRY PAINTED BY TENANT
E8	MURAL GRAPHICS BY DEVELOPER



C1 SOUTH ELEVATION - 300
1/8" = 1'-0"



A1 NORTH ELEVATION - 300
1/8" = 1'-0"

milwaukee | madison | green bay | denver | atlanta

PROJECT INFORMATION

Hilldale - Phase 3 - Buildings 200 and 300

702 N. Midvale Blvd.
Madison, WI 53705

ISSUANCE AND REVISIONS

DATE	DESCRIPTION
03/13/2023	CITY SUBMITTAL

KEY PLAN

SHEET INFORMATION

PROGRESS DOCUMENTS NOT FOR CONSTRUCTION

These documents reflect progress and intent and may be subject to change, including additional detail. These are not final construction documents and shall not be used for final bidding or construction-related purposes.

PROJECT MANAGER	JP
PROJECT NUMBER	719494-01

EXTERIOR ELEVATIONS - 300

A203-3

© 2023 Eppstein Uhen Architects, Inc.

KEYNOTES PER SHEET

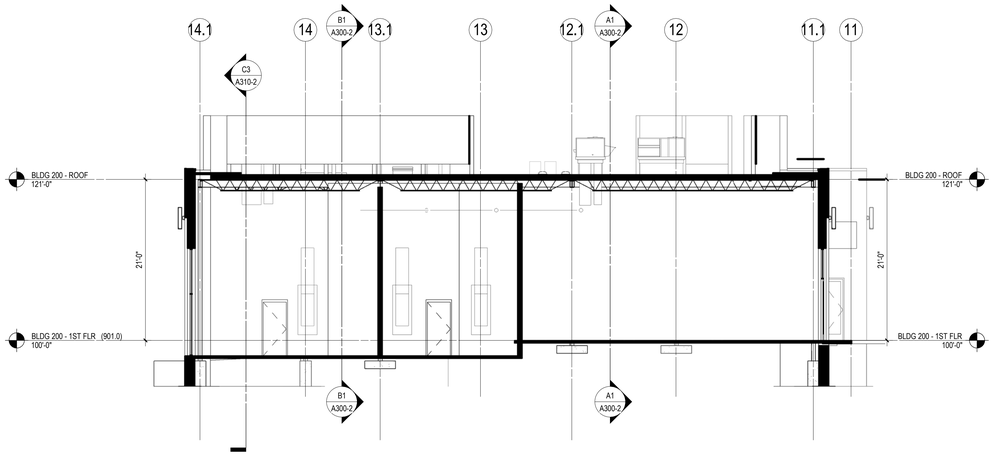

D1 200 - EW AT GRID H
1/8" = 1'-0"

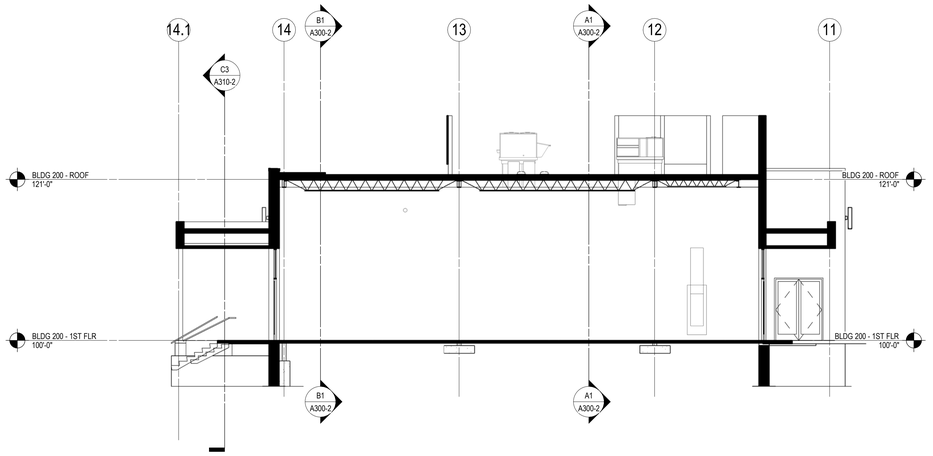

D4 200 - EW AT EXT STAIRS
1/8" = 1'-0"

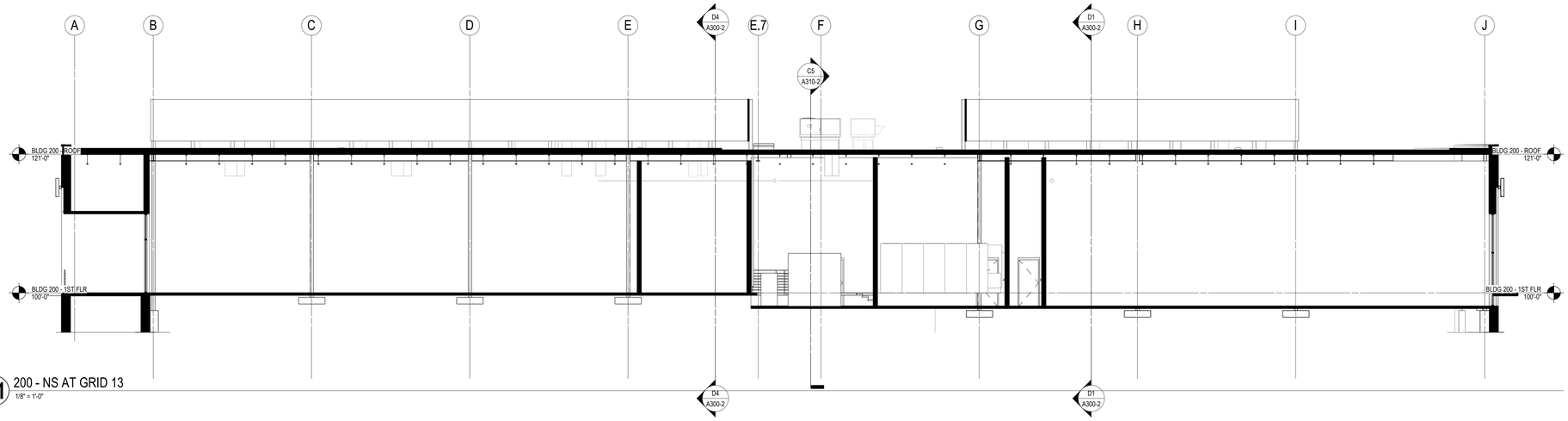

B1 200 - NS AT GRID 13
1/8" = 1'-0"

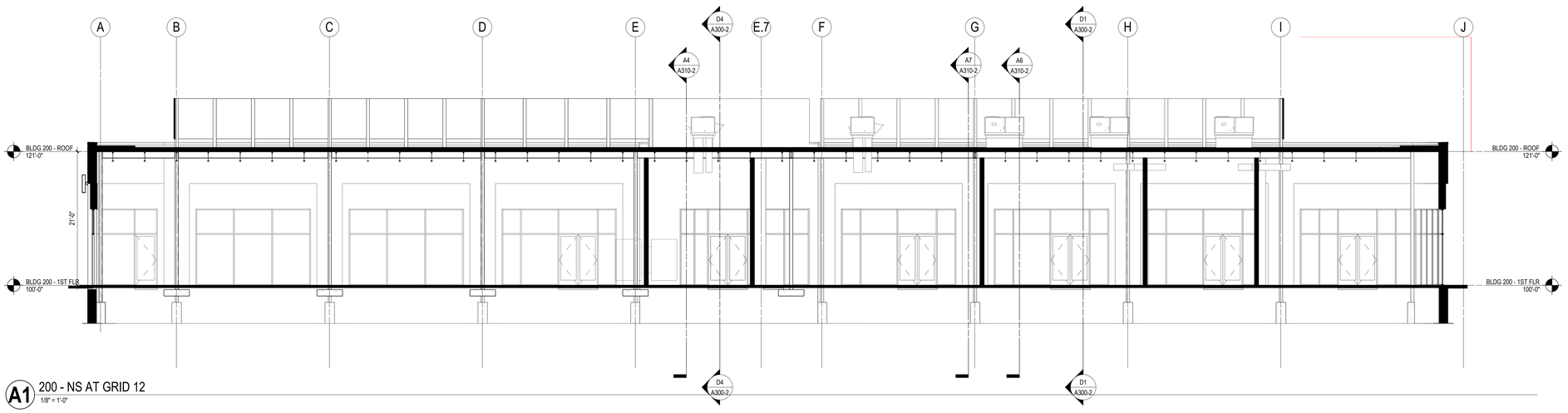

A1 200 - NS AT GRID 12
1/8" = 1'-0"

eua
milwaukee | madison | green bay | denver | atlanta

PROJECT INFORMATION

Hilldale - Phase 3 - Buildings 200 and 300

702 N. Midvale Blvd.
Madison, WI 53705

ISSUANCE AND REVISIONS

DATE	DESCRIPTION
03/13/2023	CITY SUBMITTAL

KEY PLAN

SHEET INFORMATION

PROGRESS DOCUMENTS NOT FOR CONSTRUCTION

These documents reflect progress and intent and may be subject to change, including additional detail. These are not final construction documents and shall not be used for final bidding or construction-related purposes.

PROJECT MANAGER	JP
PROJECT NUMBER	719494-01

BUILDING SECTIONS - 200

A300-2

© 2023 Eppstein Uhen Architects, Inc.

KEYNOTES PER SHEET

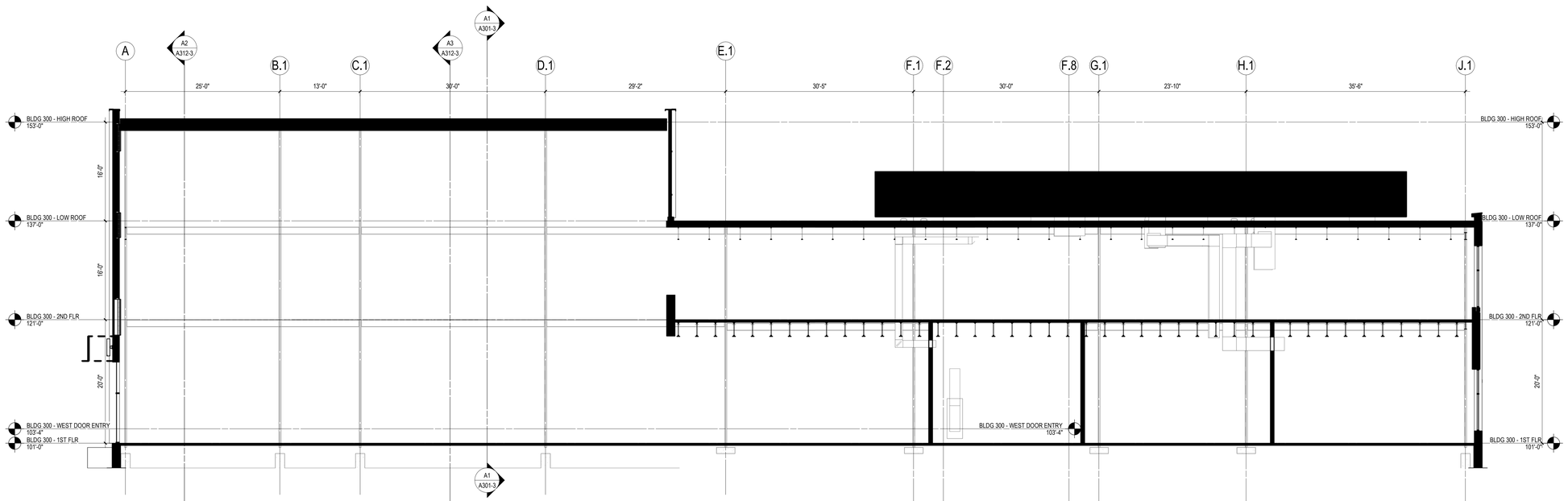

C1 300 - NS SECTION
1/8" = 1'-0"

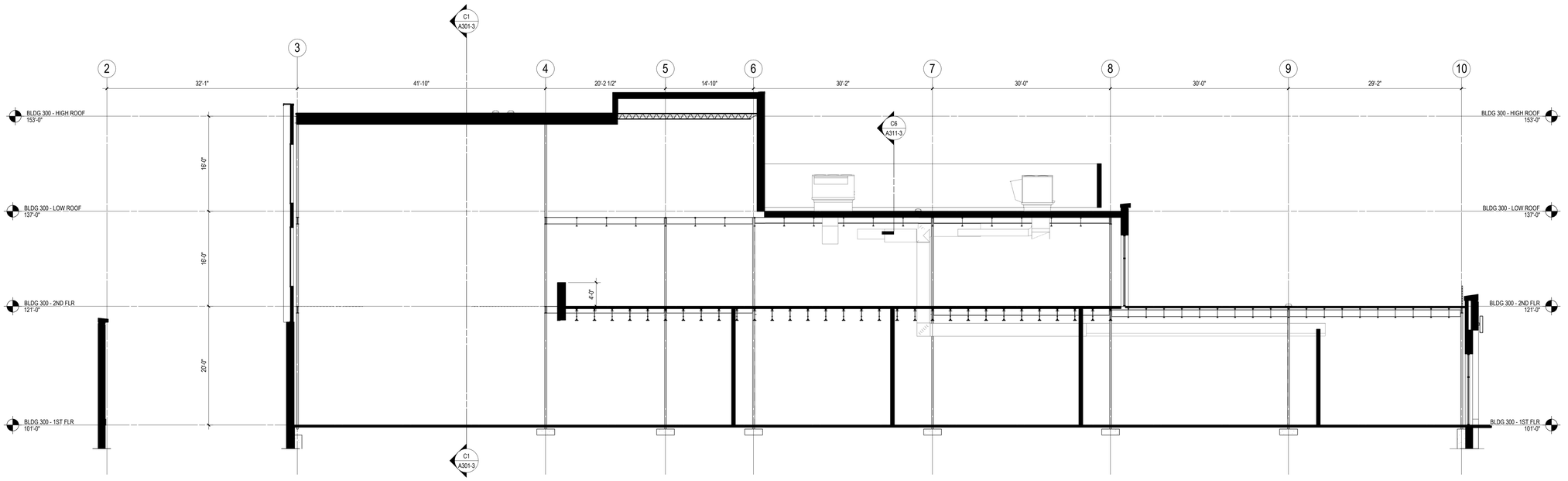

A1 300 - EW SECTION
1/8" = 1'-0"

eua
milwaukee | madison | green bay | denver | atlanta

PROJECT INFORMATION

Hilldale - Phase 3 - Buildings 200 and 300

702 N. Midvale Blvd.
Madison, WI 53705

ISSUANCE AND REVISIONS

DATE	DESCRIPTION
03/13/2023	CITY SUBMITTAL

KEY PLAN

SHEET INFORMATION

PROGRESS DOCUMENTS NOT FOR CONSTRUCTION

These documents reflect progress and intent and may be subject to change, including additional detail. These are not final construction documents and shall not be used for final bidding or construction-related purposes.

PROJECT MANAGER	JP
PROJECT NUMBER	719494-01

BUILDING SECTIONS - 300

A301-3

© 2023 Eppstein Uhen Architects, Inc.



HILLDALE PHASE 3 - RESIDENTIAL

401 N SEGOE RD
MADISON, WI 53705

HILLDALE

WS

REALM COLLABORATIVE

H+A

eu:a

SNYDER & ASSOCIATES

CITY SUBMITTAL

03/13/2023

PROJECT NUMBER: 719494-01

© 2023 Eppstein Uhen Architects, Inc.

ABBREVIATIONS

A		**C**		**F**		**I**		**P**		**T**	
A/C	air conditioning	CLR	clear	F	female	ID	inside diameter	PJ	panel joint	T&M	time & materials
A/E	Architect/Engineer	CM	construction	FA	filler	INSUL	insulation	PLAM	plastic laminate	TEMP	temperature
ACT	acoustical		management	FA	fire alarm	INT	interior	PLYWD	plywood	TEMP	temporary
	ceiling tile	CM	construction manager	FA	fluid-applied			PNL	panel	TER	terrazzo
ADDL	additional	CMU	concrete masonry unit	FAB	fabric	**J**		PREFAB	prefabricated	TERB	terrazzo base
ADDM	addendum	CO	cleanout	FC	file cabinet	JS	janitor sink	PREFIN	prefinished	TFF	top of finished floor
ADJ	adjustable	COL	column	FD	floor drain			PSI	pounds per square	TKBD	tackboard
AFC	above finished	CONC	concrete	FE	fire extinguisher	**L**			inch	TO	top of
	counter	CORR	corridor	FEC	fire extinguisher	LAM	laminate	PT	paint	TOB	top of beam
AFF	above finished	CPT	carpet		cabinet	LAV	lavatory	PTN	partition	TOC	top of concrete
	floor	CSWK	casework	FHC	fire hose cabinet	LF	linear foot			TOJ	top of joist
AFG	above finished	CT	ceramic tile	FIN	finish	LL	live load	**Q**		TOPO	topography
	grade	CW	cold water	FLR	floor			QT	quarry tile	TOS	top of slab
AFS	above finished	CTB	ceramic tile base	FM	factory mutual	**M**		QTB	quarry tile base	TOS	top of steel
	slab			FM	floor mat	MAT	material	QTY	quantity	TRNS	transom
ALT	alternate	**D**		FO	finished opening	MAX	maximum	QTZ	quartz	TYP	typical
ALUM	aluminum	DBL	double	FP	fire protection	MC	modular carpet tile				
APPD	approved	DEMO	demolition	FP	fireproof	MECH	mechanical	**R**		**U**	
APT	apartment	DEPT	department	FPL	fireplace	MFR	manufacturer	RB	resilient base	UNO	unless noted otherwise
AP	accoustical panel	DF	drinking fountain	FRP	fiberglass	MICRO	microwave	RCP	reflected ceiling plan		
ASC	above suspended	DIA	diameter		reinforced plastic	MIN	minimum	RD	roof drain	**V**	
	ceiling	DP	decorative panel	FRT	fire retardant treated	MIN	minute	REBAR	reinforcing steel bars	VERT	vertical
		DR	door	FTG	footing	MISC	miscellaneous	REC	recess	VF/CI	vendor furnished,
B		DR FR	door frame			MJ	movement joint	REF	reference		contractor installed
BB	baseboard	DTL	detail	**G**		MO	masonry opening	REF	refrigerator	VF/OI	vendor furnished,
BLDG	building	DS	downspout	GA	gauge	MS	mop sink	RF	resilient flooring		owner installed
BLT	borrowed lite	DW	dishwasher	GALV	galvanized	MTL	metal	REV	revision	VF/VI	vendor furnished,
BLW	below	DWG	drawing	GB	grab bar			RFS	room finish schedule		vendor installed
BPL	base plate			GC	general contractor	**N**		RO	rough opening	VNR	veneer
BO	bottom of	**E**		GL	glass	N	north			VIF	verify in field
BOS	bottom of steel	E	east	GLU LAM	glue laminated	NA	not applicable	**S**		**W**	
		EIFS	exterior insulation		wood	NIC	not in contract	S	south	W	west
C			& finish system	GR	grade, grading	NO	number	SAN	sanitary	W/	with
CB	catch basin,	EL	elevation	GT	grout	NM	nominal	SC	sealed concrete	WO	without
	construction bulletin	EJ	expansion joint	GYP BD	gypsum	NS	no scale	SC	solid core	WC	water closet
CF/CI	contractor furnished,	ELEC	electric			NTS	not to scale	SCHED	schedule	WC	wall covering
	contractor installed	ELEC	electrical	**H**				SCHED	scheduled	WD	wood
CF/OI	contractor furnished,	ELEV	elevator	HB	hose bibb	**O**		SF	square foot	WDB	wood base
	owner installed	EP	epoxy	HC	hollow core	OA	overall	SIM	sim	WDV	wood veneer
CF/VI	contractor furnished,	EPS	expanded polystyrene	HDWE	hardware	OC	on center	SL	sidelite	WH	water heater
	vendor installed		board	HM	hollow metal	OD	outside diameter	SNGL	single	WP	wall protection
CG	corner guard	EQ	equal	HORIZ	horizontal	OF/CI	owner furnished,	SS	solid surface	WP	work point
CIP	cast-in-place	ETR	existing to remain	HSKP	housekeeping		contractor installed	SST	stainless steel	WT	window treatment
CNTR	counter	EXIST	existing	HGT	height	OF/OI	owner furnished,	ST	stain		
CL	centerline	EXT	exterior	HR	hour		owner installed	ST	stair	**X**	
CLG	ceiling			HVAC	heating, ventilating	OF/VI	owner furnished,	STC	sound transmission	XPS	extruded polystyrene
					& air conditioning		vendor installed		coefficient		board
				HW	hot water	OH DR	overhead door	STL	steel		
				HWY	highway	OPH	opposite hand	STN	stone		
						OPNG	opening	STNB	stone base		
								STRUCT	structure		

SYMBOL LEGEND

CALLOUTS

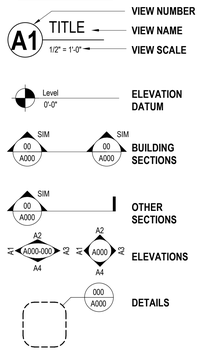

VIEW NUMBER
VIEW NAME
VIEW SCALE
ELEVATION DATUM
BUILDING SECTIONS
OTHER SECTIONS
ELEVATIONS
DETAILS

TAGS

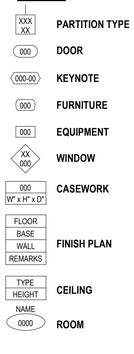

PARTITION TYPE
DOOR
KEYNOTE
FURNITURE
EQUIPMENT
WINDOW
CASEWORK
FINISH PLAN
CEILING
ROOM

GRAPHICS

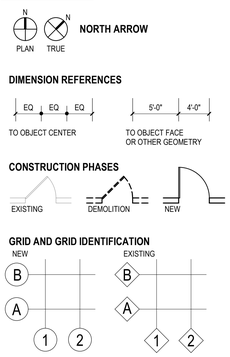

NORTH ARROW

DIMENSION REFERENCES

CONSTRUCTION PHASES

GRID AND GRID IDENTIFICATION

VICINITY MAP



PROJECT TEAM

OWNER
WS DEVELOPMENT

33 Boylston Street, Suite 3000
Chestnut Hill, MA 02467
PHONE: 617.232.8900
www.wsdevelopment.com

PROJECT CONTACT: Mark Wendell , Studio Director
DIRECT PHONE: 617.232.8900
EMAIL ADDRESS: mark.wendell@wsdevelopment.com

ARCHITECTURAL
EPPSTEIN UHEN ARCHITECTS, INC.

309 West Johnson Street, Suite 202
Madison, WI 53703
PHONE: 608.442.5350
www.eua.com

PROJECT CONTACT: Jonathan Parker , Project Manager
DIRECT PHONE: 608.442.6681
EMAIL ADDRESS: jonathanp@eua.com

ARCHITECTURAL
HACIN + ASSOCIATES

500 Harrison Ave, Studio 4F
Boston, MA 02118
PHONE: 617.426.0077
www.hacin.com

PROJECT CONTACT: Matthew Manke , Senior Associate
DIRECT PHONE: 617.273.2445
EMAIL ADDRESS: mmanke@hacin.com

LANDSCAPE/PLANNING
REALM COLLABORATIVE

100 E. Broad Street, Suite 1710
Columbus, OH 43215
PHONE: 614.670.7390
www.realmcollaborative.com

PROJECT CONTACT: Brian Bernstein , Principal
DIRECT PHONE: 216.647.5888
EMAIL ADDRESS: bbernstein@REALMcollaborative.com

CIVIL
SNYDER & ASSOCIATES

5010 Voges Rd.
Madison, WI 53718
PHONE: 608.838.0444
www.snyder-associates.com

PROJECT CONTACT: Scott Anderson , Civil Engineer
DIRECT PHONE: 608.838.0444
EMAIL ADDRESS: sanderson@snyder-associates.com

MEP
RTM ENGINEERING CONSULTANTS, LLC

316 North Milwaukee Street, Suite 560
Milwaukee, WI 53202
PHONE: 414.273.1432
www.rtmec.com

PROJECT CONTACT: Martin Herrick , Mechanical
DIRECT PHONE: 414.[illegible]
EMAIL ADDRESS: martin.herrick@rtmec.com

STRUCTURAL
OTIE

5100 Eastpark Blvd #300
Madison, WI 53718
PHONE: 608.243.6470
www.otie.com

PROJECT CONTACT: James Hall , Structural Engineer
DIRECT PHONE: 608.241.6717
EMAIL ADDRESS: jhall@oescgroup.com

SHEET INDEX

INDEX

G000-1	INDEX
A100	LL PLAN - OVERALL
A100E	LL PLAN - EAST
A100W	LL PLAN - WEST
A101	1ST FLR PLAN - OVERALL
A101E	1ST FLR PLAN - EAST
A101W	1ST FLR PLAN - WEST
A102	2ND FLR PLAN - OVERALL
A102E	2ND FLR PLAN - EAST
A102W	2ND FLR PLAN - WEST
A107	ROOF PLAN - OVERALL
A107E	ROOF PLAN - EAST
A107W	ROOF PLAN - WEST
A200	EXTERIOR ELEVATIONS - NORTH
A201	EXTERIOR ELEVATIONS - EAST & WEST
A202	EXTERIOR ELEVATIONS - SOUTH
A300	BUILDING SECTIONS - EAST/WEST
A301	BUILDING SECTIONS - NORTH/SOUTH
ES100	ELECTRICAL SITE PLAN - PLAN COMMISSION

eua

milwaukee | madison | green bay | denver | atlanta

PROJECT INFORMATION

HILLDALE PHASE 3 - RESIDENTIAL

401 N SEGOE RD
MADISON, WI 53705

ISSUANCE AND REVISIONS

DATE	DESCRIPTION
03/13/2023	CITY SUBMITTAL

KEY PLAN

SHEET INFORMATION

PROGRESS DOCUMENTS NOT FOR CONSTRUCTION

These documents reflect progress and intent and may be subject to change, including additional detail. These are not final construction documents and shall not be used for final bidding or construction-related purposes.

PROJECT MANAGER JP

PROJECT NUMBER 719494-01

INDEX

G000-1

© 2023 Eppstein Uhen Architects, Inc.

SHEET NOTES - FLOOR PLAN

1.	BEFORE BEGINNING WORK, VERIFY THE EXISTENCE AND LOCATION OF PLUMBING, MECHANICAL AND ELECTRICAL SYSTEMS AND OTHER CONSTRUCTION AFFECTING THE WORK. IF DISCREPANCIES ARE DISCOVERED, NOTIFY ARCHITECT PROMPTLY.
2.	ALL DIMENSION STRINGS ARE TO FINISH FACE OF WALL, UNLESS NOTED OTHERWISE.
3.	REFER TO STRUCTURAL DRAWINGS FOR ELEMENTS, INCLUDING BUT NOT LIMITED TO POST TENSION CABLES OR OTHER REINFORCEMENT EMBEDDED IN FLOOR SLABS, PRIOR TO CORING OR CUTTING PENETRATIONS.
4.	REFER TO SHEET A010 FOR REFERENCED PARTITION TYPES AND DETAILS. WALLS NOT TAGGED ON THESE PLANS SHALL BE PARTITION TYPE S3A-S11, TYPICAL DEMISING AND CORRIDOR WALL TYPES S6A-R12 UNLESS NOTED OTHERWISE.
5.	ALL WALLS DIRECTLY BEHIND OR ADJACENT TO PLUMBING FIXTURES SHALL RECEIVE MOISTURE- AND MOLD-RESISTANT GYPSUM BOARD, UNLESS NOTED OTHERWISE.
6.	LOCATE ALL DOOR JAMBS 4" FROM ADJACENT PERPENDICULAR WALL, UNLESS NOTED OTHERWISE.
7.	PROVIDE BLOCKING AND FRAMING AS INDICATED AND AS REQUIRED TO SUPPORT FACING MATERIALS, FIXTURES, SPECIALTY ITEMS, MILLWORK AND TRIM.

KEYNOTES PER SHEET

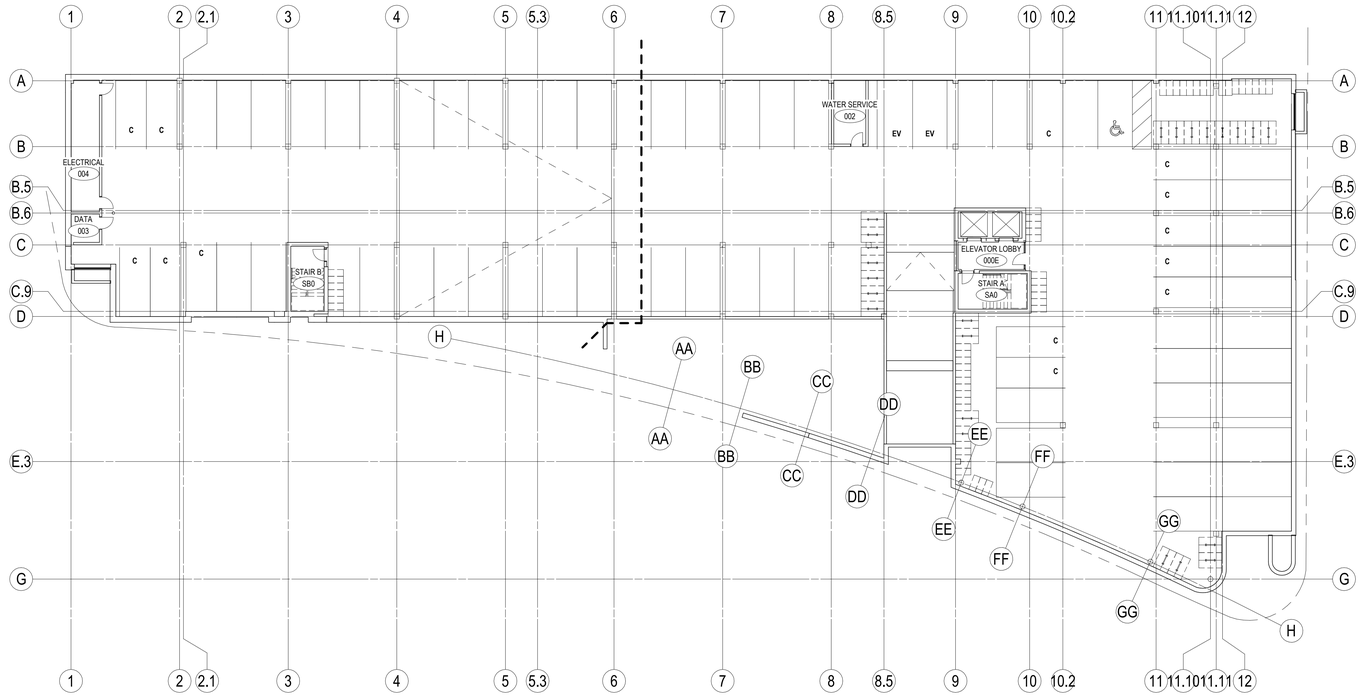

A3 LL
1/16" = 1'-0"

eua
milwaukee | madison | green bay | denver | atlanta

PROJECT INFORMATION

HILLDALE PHASE 3 - RESIDENTIAL

401 N SEGOE RD
MADISON, WI 53705

ISSUANCE AND REVISIONS

DATE	DESCRIPTION
10/18/2022	SCHEMATIC DESIGN REVISIONS
03/13/2023	CITY SUBMITTAL

KEY PLAN



SHEET INFORMATION

PROGRESS DOCUMENTS NOT FOR CONSTRUCTION

These documents reflect progress and intent and may be subject to change, including additional detail. These are not final construction documents and shall not be used for final bidding or construction-related purposes.

PROJECT MANAGER JP

PROJECT NUMBER 719494-01

LL PLAN - OVERALL

A100

© 2023 Eppstein Uhen Architects, Inc.

SHEET NOTES - FLOOR PLAN

1.	BEFORE BEGINNING WORK, VERIFY THE EXISTENCE AND LOCATION OF PLUMBING, MECHANICAL AND ELECTRICAL SYSTEMS AND OTHER CONSTRUCTION AFFECTING THE WORK. IF DISCREPANCIES ARE DISCOVERED, NOTIFY ARCHITECT PROMPTLY.
2.	ALL DIMENSION STRINGS ARE TO FINISH FACE OF WALL, UNLESS NOTED OTHERWISE.
3.	REFER TO STRUCTURAL DRAWINGS FOR ELEMENTS, INCLUDING BUT NOT LIMITED TO POST TENSION CABLES OR OTHER REINFORCEMENT EMBEDDED IN FLOOR SLABS, PRIOR TO CORING OR CUTTING PENETRATIONS.
4.	REFER TO SHEET A010 FOR REFERENCED PARTITION TYPES AND DETAILS. WALLS NOT TAGGED ON THESE PLANS SHALL BE PARTITION TYPE S3A-S11, TYPICAL DEMISING AND CORRIDOR WALL TYPES S6A-R12 UNLESS NOTED OTHERWISE.
5.	ALL WALLS DIRECTLY BEHIND OR ADJACENT TO PLUMBING FIXTURES SHALL RECEIVE MOISTURE- AND MOLD-RESISTANT GYPSUM BOARD, UNLESS NOTED OTHERWISE.
6.	LOCATE ALL DOOR JAMBS 4" FROM ADJACENT PERPENDICULAR WALL, UNLESS NOTED OTHERWISE.
7.	PROVIDE BLOCKING AND FRAMING AS INDICATED AND AS REQUIRED TO SUPPORT FACING MATERIALS, FIXTURES, SPECIALTY ITEMS, MILLWORK AND TRIM.

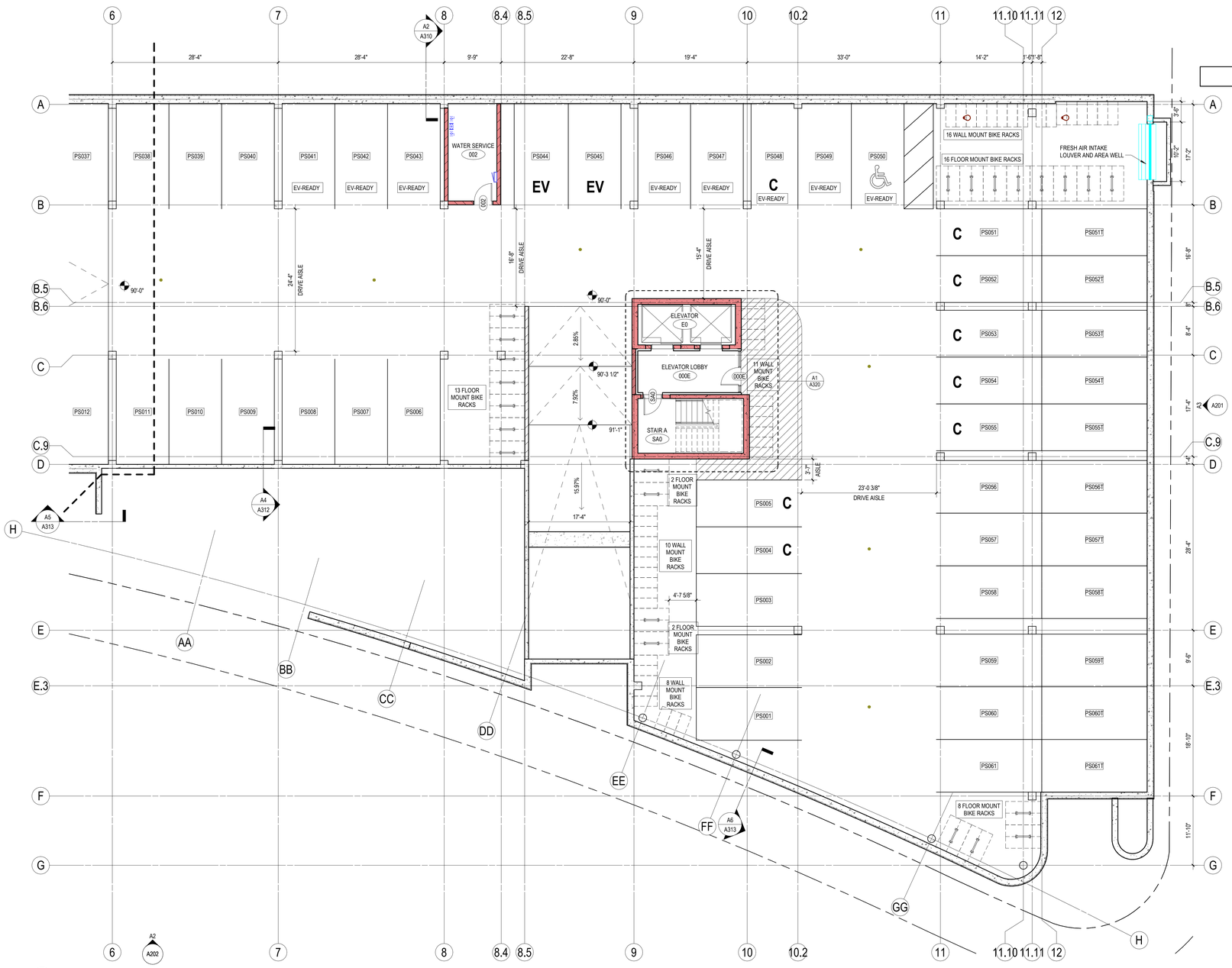

A2 LL PLAN - EAST
1/8" = 1'-0"

KEYNOTES PER SHEET

PARKING LEGEND

- FLOOR MOUNT - 2'-0"W x 6'-0"L
- WALL MOUNT - 1'-9"W x 4'-0"D @ 54" ABOVE FINISHED FLOOR
- C — COMPACT STALL
- EV — ELECTRIC VEHICLE STALL
- ACCESSIBLE STALL

eua

milwaukee | madison | green bay | denver | atlanta

PROJECT INFORMATION

HILLDALE PHASE 3 - RESIDENTIAL

401 N SEGOE RD
MADISON, WI 53705

ISSUANCE AND REVISIONS

DATE	DESCRIPTION
03/13/2023	CITY SUBMITTAL

KEY PLAN

SHEET INFORMATION

PROGRESS DOCUMENTS NOT FOR CONSTRUCTION

These documents reflect progress and intent and may be subject to change, including additional detail. These are not final construction documents and shall not be used for final bidding or construction-related purposes.

PROJECT MANAGER	JP
PROJECT NUMBER	719494-01

LL PLAN - EAST

A100E

© 2023 Eppstein Uhen Architects, Inc.

SHEET NOTES - FLOOR PLAN

1.	BEFORE BEGINNING WORK, VERIFY THE EXISTENCE AND LOCATION OF PLUMBING, MECHANICAL AND ELECTRICAL SYSTEMS AND OTHER CONSTRUCTION AFFECTING THE WORK. IF DISCREPANCIES ARE DISCOVERED, NOTIFY ARCHITECT PROMPTLY.
2.	ALL DIMENSION STRINGS ARE TO FINISH FACE OF WALL, UNLESS NOTED OTHERWISE.
3.	REFER TO STRUCTURAL DRAWINGS FOR ELEMENTS, INCLUDING BUT NOT LIMITED TO POST TENSION CABLES OR OTHER REINFORCEMENT EMBEDDED IN FLOOR SLABS, PRIOR TO CORING OR CUTTING PENETRATIONS.
4.	REFER TO SHEET A010 FOR REFERENCED PARTITION TYPES AND DETAILS. WALLS NOT TAGGED ON THESE PLANS SHALL BE PARTITION TYPE S3A-S11, TYPICAL DEMISING AND CORRIDOR WALL TYPES S6A-R12 UNLESS NOTED OTHERWISE.
5.	ALL WALLS DIRECTLY BEHIND OR ADJACENT TO PLUMBING FIXTURES SHALL RECEIVE MOISTURE- AND MOLD-RESISTANT GYPSUM BOARD, UNLESS NOTED OTHERWISE.
6.	LOCATE ALL DOOR JAMBS 4" FROM ADJACENT PERPENDICULAR WALL, UNLESS NOTED OTHERWISE.
7.	PROVIDE BLOCKING AND FRAMING AS INDICATED AND AS REQUIRED TO SUPPORT FACING MATERIALS, FIXTURES, SPECIALTY ITEMS, MILLWORK AND TRIM.

KEYNOTES PER SHEET

PARKING LEGEND

- FLOOR MOUNT - 2'-0"W x 6'-0"L
- WALL MOUNT - 1'-9"W x 4'-0"D @ 54" ABOVE FINISHED FLOOR
- **C** COMPACT STALL
- **EV** ELECTRIC VEHICLE STALL
- ACCESSIBLE STALL

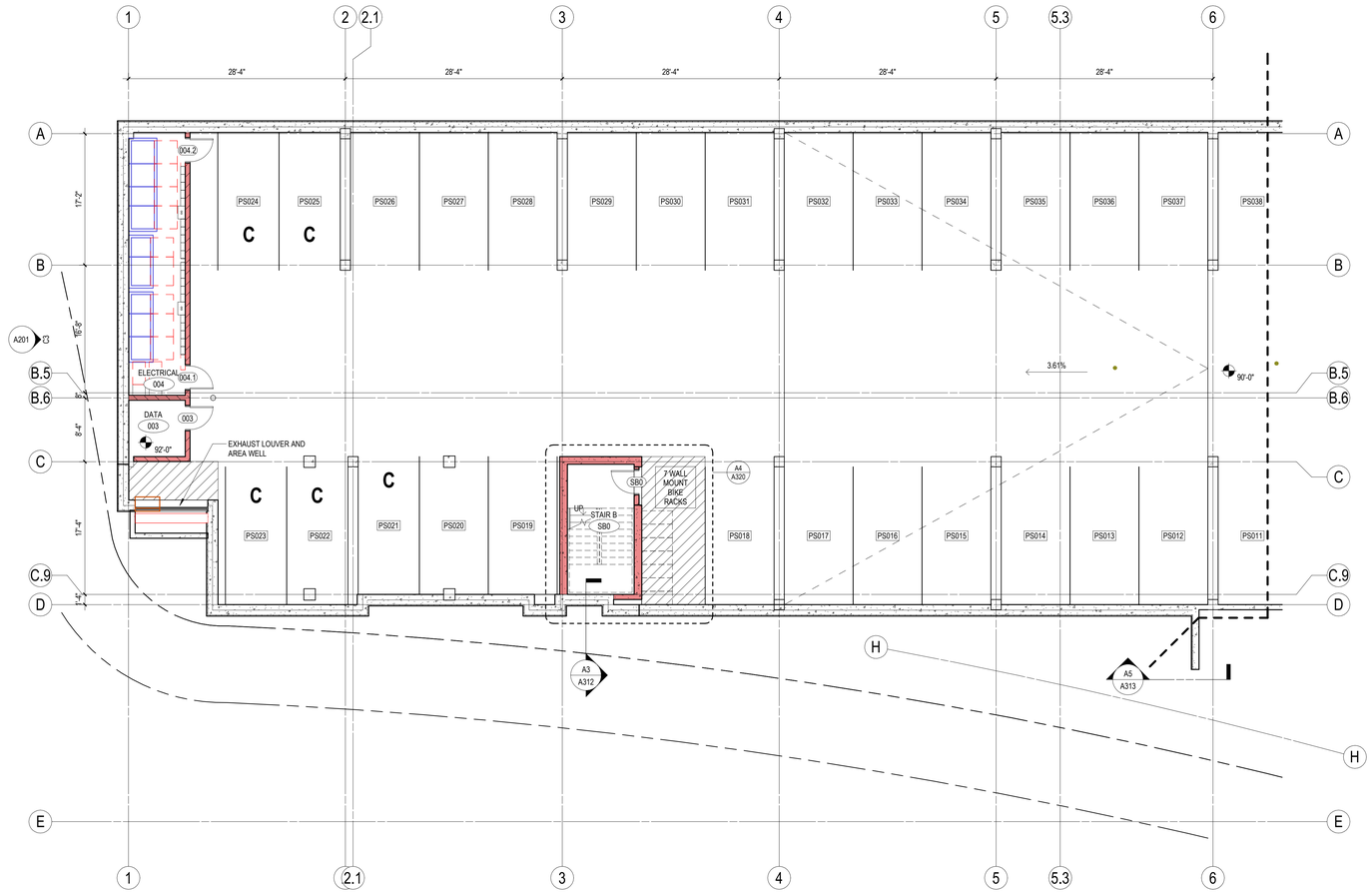

1 LL PLAN - WEST
1/8" = 1'-0"

eua
milwaukee | madison | green bay | denver | atlanta

PROJECT INFORMATION

HILLDALE PHASE 3 - RESIDENTIAL

401 N SEGOE RD
MADISON, WI 53705

ISSUANCE AND REVISIONS

DATE	DESCRIPTION
03/13/2023	CITY SUBMITTAL

KEY PLAN

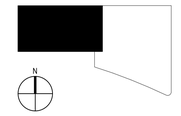

SHEET INFORMATION

PROGRESS DOCUMENTS NOT FOR CONSTRUCTION

These documents reflect progress and intent and may be subject to change, including additional detail. These are not final construction documents and shall not be used for final bidding or construction-related purposes.

PROJECT MANAGER	JP
PROJECT NUMBER	719494-01

LL PLAN - WEST

A100W

© 2023 Eppstein Uhen Architects, Inc.

SHEET NOTES - FLOOR PLAN

1.	BEFORE BEGINNING WORK, VERIFY THE EXISTENCE AND LOCATION OF PLUMBING, MECHANICAL AND ELECTRICAL SYSTEMS AND OTHER CONSTRUCTION AFFECTING THE WORK. IF DISCREPANCIES ARE DISCOVERED, NOTIFY ARCHITECT PROMPTLY.
2.	ALL DIMENSION STRINGS ARE TO FINISH FACE OF WALL, UNLESS NOTED OTHERWISE.
3.	REFER TO STRUCTURAL DRAWINGS FOR ELEMENTS, INCLUDING BUT NOT LIMITED TO POST TENSION CABLES OR OTHER REINFORCEMENT EMBEDDED IN FLOOR SLABS, PRIOR TO CORING OR CUTTING PENETRATIONS.
4.	REFER TO SHEET A010 FOR REFERENCED PARTITION TYPES AND DETAILS. WALLS NOT TAGGED ON THESE PLANS SHALL BE PARTITION TYPE S3A-S11, TYPICAL DEMISING AND CORRIDOR WALL TYPES S6A-R12 UNLESS NOTED OTHERWISE.
5.	ALL WALLS DIRECTLY BEHIND OR ADJACENT TO PLUMBING FIXTURES SHALL RECEIVE MOISTURE- AND MOLD-RESISTANT GYPSUM BOARD, UNLESS NOTED OTHERWISE.
6.	LOCATE ALL DOOR JAMBS 4" FROM ADJACENT PERPENDICULAR WALL, UNLESS NOTED OTHERWISE.
7.	PROVIDE BLOCKING AND FRAMING AS INDICATED AND AS REQUIRED TO SUPPORT FACING MATERIALS, FIXTURES, SPECIALTY ITEMS, MILLWORK AND TRIM.

KEYNOTES PER SHEET

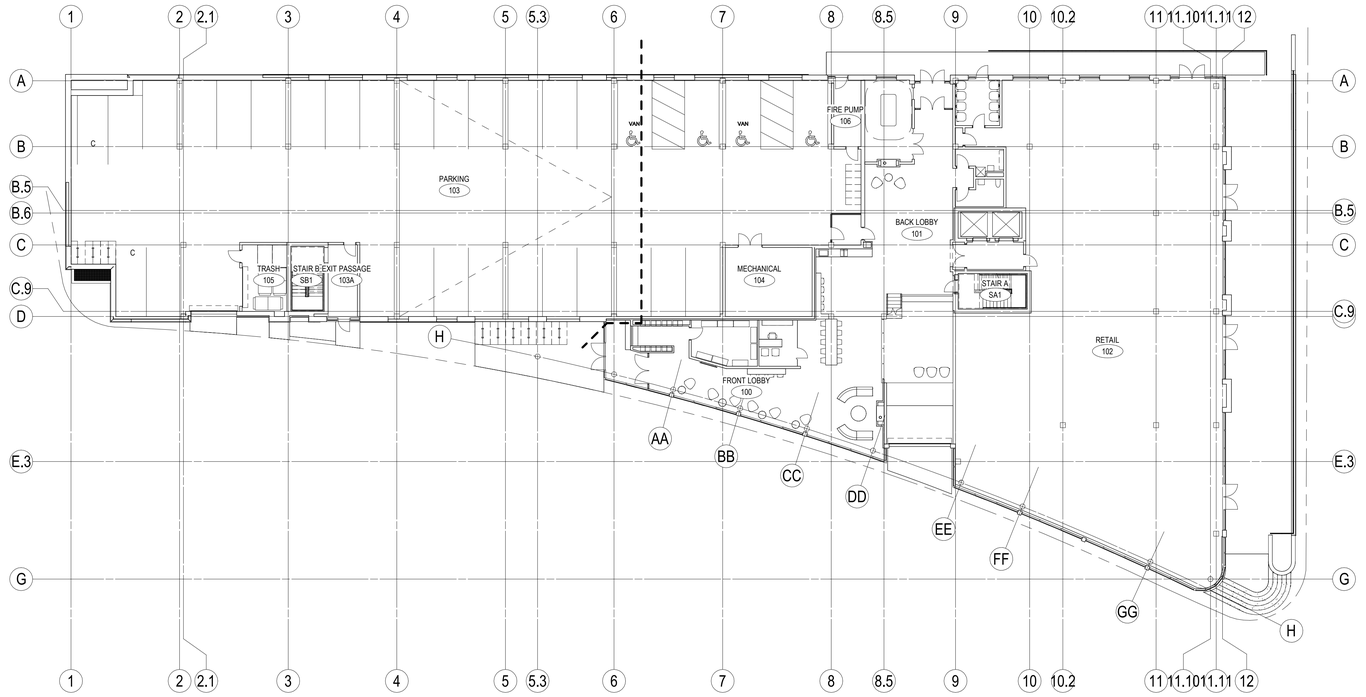

A3 1ST FLR
1/16" = 1'-0"

eua
milwaukee | madison | green bay | denver | atlanta

PROJECT INFORMATION

HILLDALE PHASE 3 - RESIDENTIAL

401 N SEGOE RD
MADISON, WI 53705

ISSUANCE AND REVISIONS

DATE	DESCRIPTION
03/13/2023	CITY SUBMITTAL

KEY PLAN

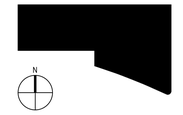

SHEET INFORMATION

PROGRESS DOCUMENTS NOT FOR CONSTRUCTION

These documents reflect progress and intent and may be subject to change, including additional detail. These are not final construction documents and shall not be used for final bidding or construction-related purposes.

PROJECT MANAGER	JP
PROJECT NUMBER	719494-01

1ST FLR PLAN - OVERALL

A101

© 2023 Eppstein Uhen Architects, Inc.

SHEET NOTES - FLOOR PLAN

1.	BEFORE BEGINNING WORK, VERIFY THE EXISTENCE AND LOCATION OF PLUMBING, MECHANICAL AND ELECTRICAL SYSTEMS AND OTHER CONSTRUCTION AFFECTING THE WORK. IF DISCREPANCIES ARE DISCOVERED, NOTIFY ARCHITECT PROMPTLY.
2.	ALL DIMENSION STRINGS ARE TO FINISH FACE OF WALL, UNLESS NOTED OTHERWISE.
3.	REFER TO STRUCTURAL DRAWINGS FOR ELEMENTS, INCLUDING BUT NOT LIMITED TO POST TENSION CABLES OR OTHER REINFORCEMENT EMBEDDED IN FLOOR SLABS, PRIOR TO CORING OR CUTTING PENETRATIONS.
4.	REFER TO SHEET A010 FOR REFERENCED PARTITION TYPES AND DETAILS. WALLS NOT TAGGED ON THESE PLANS SHALL BE PARTITION TYPE S3A-S11, TYPICAL DEMISING AND CORRIDOR WALL TYPES S6A-R12 UNLESS NOTED OTHERWISE.
5.	ALL WALLS DIRECTLY BEHIND OR ADJACENT TO PLUMBING FIXTURES SHALL RECEIVE MOISTURE- AND MOLD-RESISTANT GYPSUM BOARD, UNLESS NOTED OTHERWISE.
6.	LOCATE ALL DOOR JAMBS 4" FROM ADJACENT PERPENDICULAR WALL, UNLESS NOTED OTHERWISE.
7.	PROVIDE BLOCKING AND FRAMING AS INDICATED AND AS REQUIRED TO SUPPORT FACING MATERIALS, FIXTURES, SPECIALTY ITEMS, MILLWORK AND TRIM.

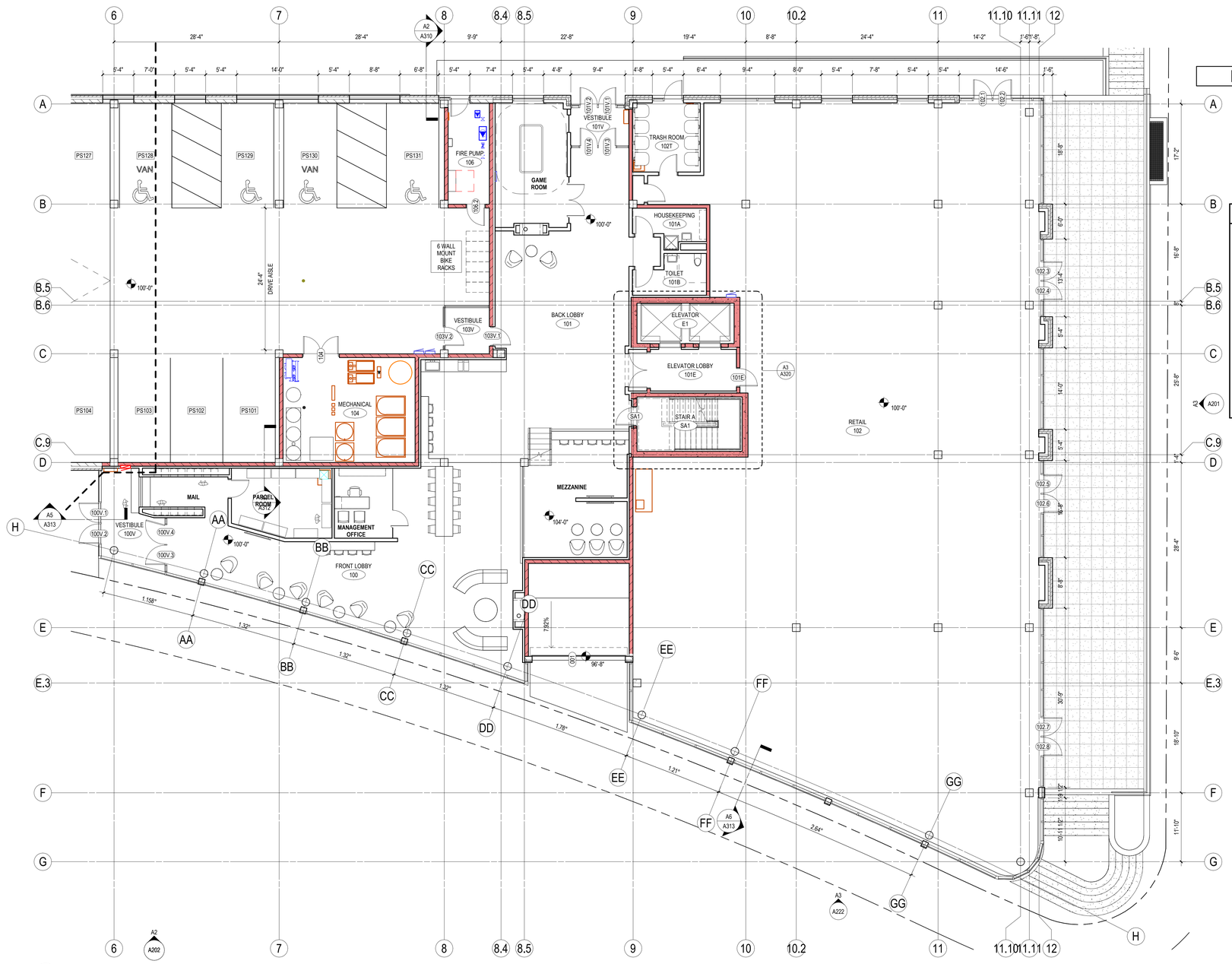

A2 1ST FLR PLAN - EAST
1/8" = 1'-0"

KEYNOTES PER SHEET

PARKING LEGEND

- FLOOR MOUNT - 2'-0"W x 6'-0"L
- WALL MOUNT - 1'-9"W x 4'-0"D @ 54" ABOVE FINISHED FLOOR
- C — COMPACT STALL
- EV — ELECTRIC VEHICLE STALL
- ACCESSIBLE STALL

eua

milwaukee | madison | green bay | denver | atlanta

PROJECT INFORMATION

HILLDALE PHASE 3 - RESIDENTIAL

401 N SEGOE RD
MADISON, WI 53705

ISSUANCE AND REVISIONS

DATE	DESCRIPTION
03/13/2023	CITY SUBMITTAL

KEY PLAN

SHEET INFORMATION

PROGRESS DOCUMENTS NOT FOR CONSTRUCTION

These documents reflect progress and intent and may be subject to change, including additional detail. These are not final construction documents and shall not be used for final bidding or construction-related purposes.

PROJECT MANAGER	JP
PROJECT NUMBER	719494-01

1ST FLR PLAN - EAST

A101E

© 2023 Eppstein Uhen Architects, Inc.

SHEET NOTES - FLOOR PLAN

1.	BEFORE BEGINNING WORK, VERIFY THE EXISTENCE AND LOCATION OF PLUMBING, MECHANICAL AND ELECTRICAL SYSTEMS AND OTHER CONSTRUCTION AFFECTING THE WORK. IF DISCREPANCIES ARE DISCOVERED, NOTIFY ARCHITECT PROMPTLY.
2.	ALL DIMENSION STRINGS ARE TO FINISH FACE OF WALL, UNLESS NOTED OTHERWISE.
3.	REFER TO STRUCTURAL DRAWINGS FOR ELEMENTS, INCLUDING BUT NOT LIMITED TO POST TENSION CABLES OR OTHER REINFORCEMENT EMBEDDED IN FLOOR SLABS, PRIOR TO CORING OR CUTTING PENETRATIONS.
4.	REFER TO SHEET A010 FOR REFERENCED PARTITION TYPES AND DETAILS. WALLS NOT TAGGED ON THESE PLANS SHALL BE PARTITION TYPE S3A-S11, TYPICAL DEMISING AND CORRIDOR WALL TYPES S6A-R12 UNLESS NOTED OTHERWISE.
5.	ALL WALLS DIRECTLY BEHIND OR ADJACENT TO PLUMBING FIXTURES SHALL RECEIVE MOISTURE- AND MOLD-RESISTANT GYPSUM BOARD, UNLESS NOTED OTHERWISE.
6.	LOCATE ALL DOOR JAMBS 4" FROM ADJACENT PERPENDICULAR WALL, UNLESS NOTED OTHERWISE.
7.	PROVIDE BLOCKING AND FRAMING AS INDICATED AND AS REQUIRED TO SUPPORT FACING MATERIALS, FIXTURES, SPECIALTY ITEMS, MILLWORK AND TRIM.

KEYNOTES PER SHEET

PARKING LEGEND

- FLOOR MOUNT - 2'-0"W x 6'-0"L
- WALL MOUNT - 1'-9"W x 4'-0"D @ 54" ABOVE FINISHED FLOOR
- **C** COMPACT STALL
- **EV** ELECTRIC VEHICLE STALL
- ACCESSIBLE STALL

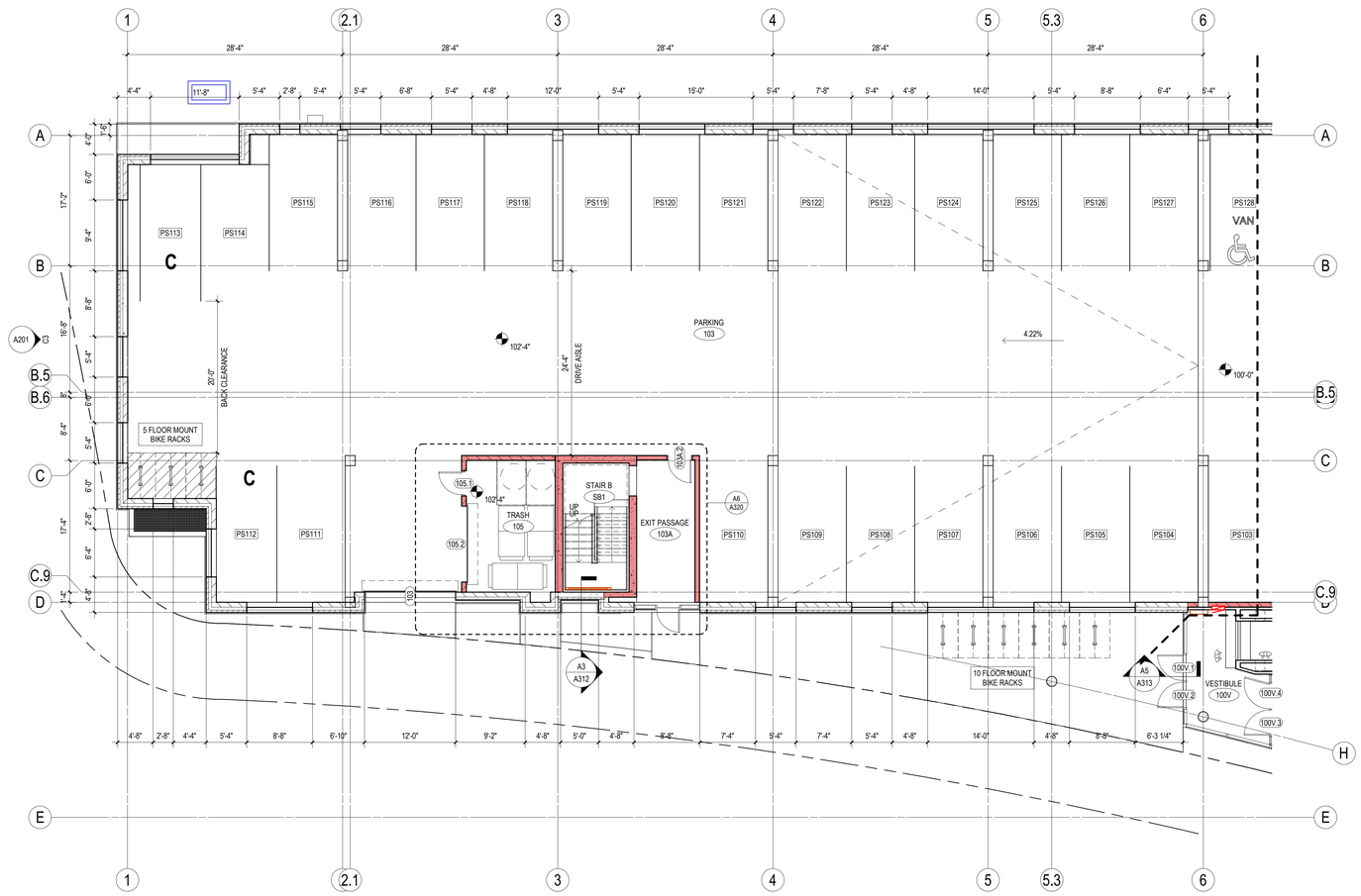

1 1ST FLR PLAN - WEST
1/8" = 1'-0"

eua
milwaukee | madison | green bay | denver | atlanta

PROJECT INFORMATION

HILLDALE PHASE 3 - RESIDENTIAL

401 N SEGOE RD
MADISON, WI 53705

ISSUANCE AND REVISIONS

DATE	DESCRIPTION
03/13/2023	CITY SUBMITTAL

KEY PLAN

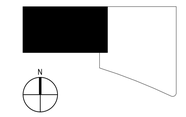

SHEET INFORMATION

PROGRESS DOCUMENTS NOT FOR CONSTRUCTION

These documents reflect progress and intent and may be subject to change, including additional detail. These are not final construction documents and shall not be used for final bidding or construction-related purposes.

PROJECT MANAGER	JP
PROJECT NUMBER	719494-01

1ST FLR PLAN - WEST

A101W

© 2023 Eppstein Uhen Architects, Inc.

SHEET NOTES - FLOOR PLAN

1.	BEFORE BEGINNING WORK, VERIFY THE EXISTENCE AND LOCATION OF PLUMBING, MECHANICAL AND ELECTRICAL SYSTEMS AND OTHER CONSTRUCTION AFFECTING THE WORK. IF DISCREPANCIES ARE DISCOVERED, NOTIFY ARCHITECT PROMPTLY.
2.	ALL DIMENSION STRINGS ARE TO FINISH FACE OF WALL, UNLESS NOTED OTHERWISE.
3.	REFER TO STRUCTURAL DRAWINGS FOR ELEMENTS, INCLUDING BUT NOT LIMITED TO POST TENSION CABLES OR OTHER REINFORCEMENT EMBEDDED IN FLOOR SLABS, PRIOR TO CORING OR CUTTING PENETRATIONS.
4.	REFER TO SHEET A010 FOR REFERENCED PARTITION TYPES AND DETAILS. WALLS NOT TAGGED ON THESE PLANS SHALL BE PARTITION TYPE S3A-S11, TYPICAL DEMISING AND CORRIDOR WALL TYPES S6A-R12 UNLESS NOTED OTHERWISE.
5.	ALL WALLS DIRECTLY BEHIND OR ADJACENT TO PLUMBING FIXTURES SHALL RECEIVE MOISTURE- AND MOLD-RESISTANT GYPSUM BOARD, UNLESS NOTED OTHERWISE.
6.	LOCATE ALL DOOR JAMBS 4" FROM ADJACENT PERPENDICULAR WALL, UNLESS NOTED OTHERWISE.
7.	PROVIDE BLOCKING AND FRAMING AS INDICATED AND AS REQUIRED TO SUPPORT FACING MATERIALS, FIXTURES, SPECIALTY ITEMS, MILLWORK AND TRIM.

KEYNOTES PER SHEET

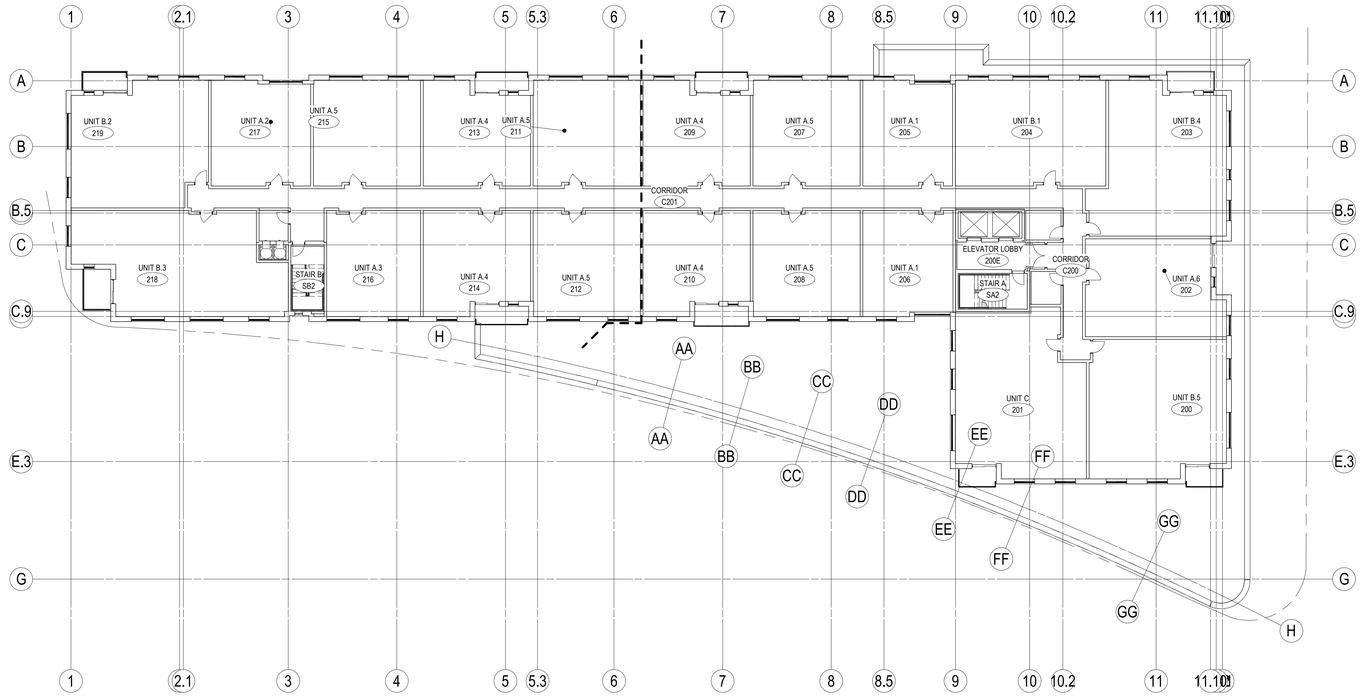

A3 2ND FLR
1/16" = 1'-0"

eua
milwaukee | madison | green bay | denver | atlanta

PROJECT INFORMATION

HILLDALE PHASE 3 - RESIDENTIAL

401 N SEGOE RD
MADISON, WI 53705

ISSUANCE AND REVISIONS

DATE	DESCRIPTION
03/13/2023	CITY SUBMITTAL

KEY PLAN

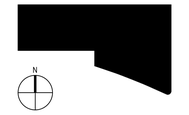

SHEET INFORMATION

PROGRESS DOCUMENTS NOT FOR CONSTRUCTION

These documents reflect progress and intent and may be subject to change, including additional detail. These are not final construction documents and shall not be used for final bidding or construction-related purposes.

PROJECT MANAGER	JP
PROJECT NUMBER	719494-01

2ND-6TH FLR PLAN - OVERALL

A102

© 2023 Eppstein Uhen Architects, Inc.

UNIT MIX

UNIT DESIGNATION	UNIT DESCRIPTION	NET AREA	LEVEL 2ND FLR	3RD FLR	4TH FLR	5TH FLR	6TH FLR	UNIT COUNT	BEDROOM COUNT	TOTAL NET UNIT AREA	% OF TOTAL UNITS
UNIT A.1	1 BR/1 BATH	630	2	2	2	2	2	10	10	6,300	10%
UNIT A.2	1 BR/1 BATH	697	1	1	1	1	1	5	5	3,485	5%
UNIT A.3	1 BR/1 BATH	670	1	1	1	1	1	5	5	3,350	5%
UNIT A.4	1 BR/1 BATH	705	5	5	5	5	5	25	25	17,625	25%
UNIT A.5	1 BR/1 BATH	767	4	4	4	4	4	20	20	15,340	20%
UNIT A.6	1 BR/1 BATH	870	1	0	1	0	1	3	3	2,610	3%
UNIT A.6 TYPE 'A'*	1 BR/1 BATH	870	0	1	0	1	0	2	2	1,740	2%
UNIT B.1	2 BR/2 BATH	1,080	0	1	0	1	0	2	4	2,160	2%
UNIT B.1 TYPE 'A'*	2 BR/2 BATH	1,080	1	0	1	0	1	3	6	3,240	3%
UNIT B.2	2 BR/2 BATH	1,091	1	1	1	1	1	5	10	5,455	5%
UNIT B.3	2 BR/2 BATH	1,287	1	1	1	1	1	5	10	6,435	5%
UNIT B.4	2 BR/2 BATH	1,254	1	1	1	1	1	5	10	6,270	5%
UNIT B.5	2 BR/2 BATH	1,250	1	1	1	1	1	5	10	6,250	5%
UNIT C	3 BR/2 BATH	1,360	1	1	1	1	1	5	15	6,800	5%
	* TYPE 'A' ACCESSIBLE DWELLING UNIT; 5 UNITS, 5% OF TOTAL UNITS						TOTALS	100	135	87,060	100%

SHEET NOTES - FLOOR PLAN

1. BEFORE BEGINNING WORK, VERIFY THE EXISTENCE AND LOCATION OF PLUMBING, MECHANICAL AND ELECTRICAL SYSTEMS AND OTHER CONSTRUCTION AFFECTING THE WORK. IF DISCREPANCIES ARE DISCOVERED, NOTIFY ARCHITECT PROMPTLY.
2. ALL DIMENSION STRINGS ARE TO FINISH FACE OF WALL, UNLESS NOTED OTHERWISE.
3. REFER TO STRUCTURAL DRAWINGS FOR ELEMENTS, INCLUDING BUT NOT LIMITED TO POST TENSION CABLES OR OTHER REINFORCEMENT EMBEDDED IN FLOOR SLABS, PRIOR TO CORING OR CUTTING PENETRATIONS.
4. REFER TO SHEET A010 FOR REFERENCED PARTITION TYPES AND DETAILS. WALLS NOT TAGGED ON THESE PLANS SHALL BE PARTITION TYPE S3A-S11, TYPICAL DEMISING AND CORRIDOR WALL TYPES S6A-R12 UNLESS NOTED OTHERWISE.
5. ALL WALLS DIRECTLY BEHIND OR ADJACENT TO PLUMBING FIXTURES SHALL RECEIVE MOISTURE- AND MOLD-RESISTANT GYPSUM BOARD, UNLESS NOTED OTHERWISE.
6. LOCATE ALL DOOR JAMBS 4" FROM ADJACENT PERPENDICULAR WALL, UNLESS NOTED OTHERWISE.
7. PROVIDE BLOCKING AND FRAMING AS INDICATED AND AS REQUIRED TO SUPPORT FACING MATERIALS, FIXTURES, SPECIALTY ITEMS, MILLWORK AND TRIM.

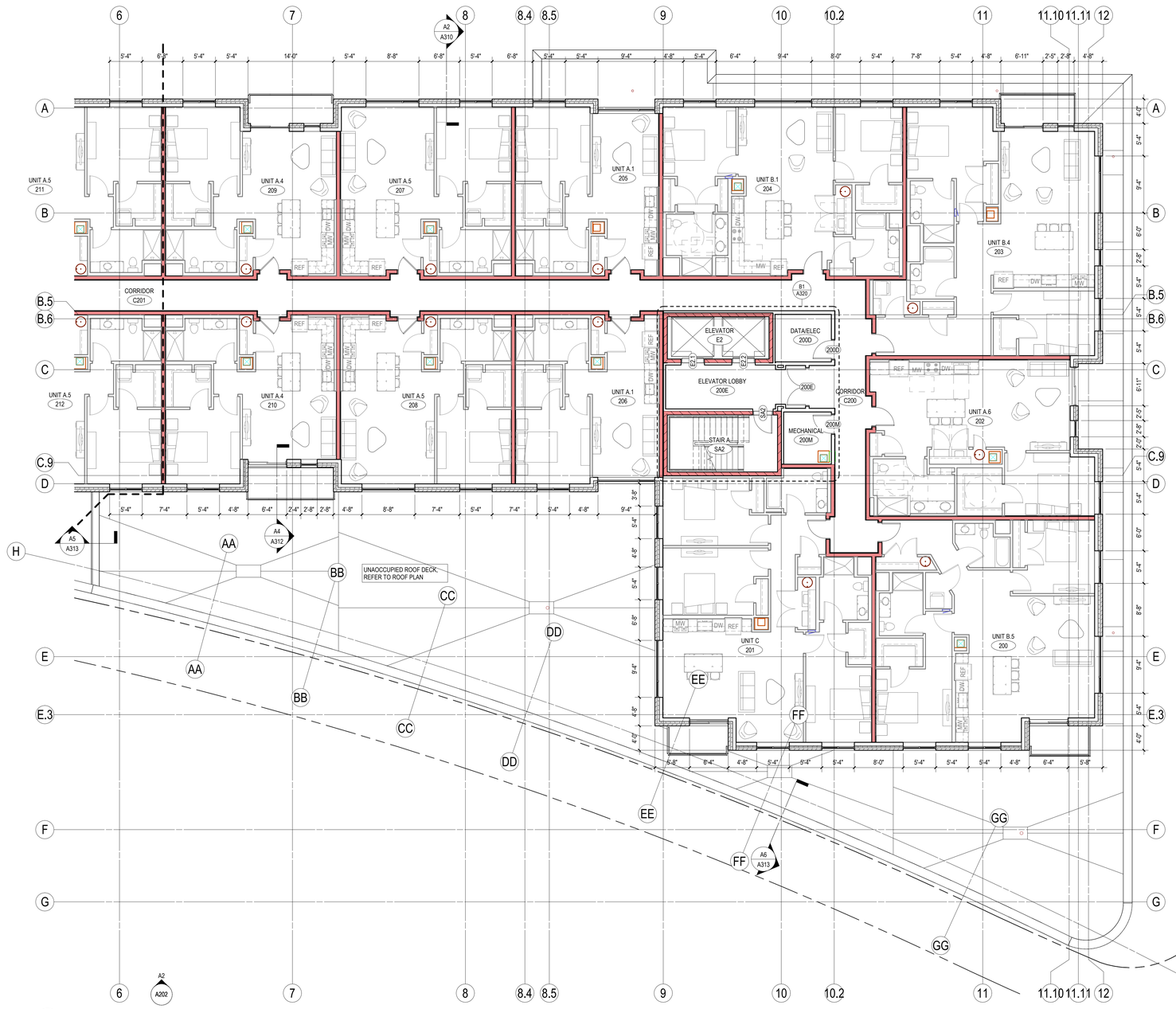

A2 2ND FLR PLAN - EAST
1/8" = 1'-0"

KEYNOTES PER SHEET

milwaukee | madison | green bay | denver | atlanta

PROJECT INFORMATION

HILLDALE PHASE 3 - RESIDENTIAL

401 N SEGOE RD
MADISON, WI 53705

ISSUANCE AND REVISIONS

DATE	DESCRIPTION
10/18/2022	SCHEMATIC DESIGN REVISIONS
03/13/2023	CITY SUBMITTAL

KEY PLAN

SHEET INFORMATION

PROGRESS DOCUMENTS NOT FOR CONSTRUCTION

These documents reflect progress and intent and may be subject to change, including additional detail. These are not final construction documents and shall not be used for final bidding or construction-related purposes.

PROJECT MANAGER JP
PROJECT NUMBER 719494-01

2ND-6TH FLR PLAN - EAST

A102E

© 2023 Eppstein Uhen Architects, Inc.

UNIT MIX

UNIT DESIGNATION	UNIT DESCRIPTION	NET AREA	LEVEL 2ND FLR	3RD FLR	4TH FLR	5TH FLR	6TH FLR	UNIT COUNT	BEDROOM COUNT	TOTAL NET UNIT AREA	% OF TOTAL UNITS
UNIT A.1	1 BR/1 BATH	630	2	2	2	2	2	10	10	6,300	10%
UNIT A.2	1 BR/1 BATH	697	1	1	1	1	1	5	5	3,485	5%
UNIT A.3	1 BR/1 BATH	670	1	1	1	1	1	5	5	3,350	5%
UNIT A.4	1 BR/1 BATH	705	5	5	5	5	5	25	25	17,625	25%
UNIT A.5	1 BR/1 BATH	767	4	4	4	4	4	20	20	15,340	20%
UNIT A.6	1 BR/1 BATH	870	1	0	1	0	1	3	3	2,610	3%
UNIT A.6 TYPE 'A'*	1 BR/1 BATH	870	0	1	0	1	0	2	2	1,740	2%
UNIT B.1	2 BR/2 BATH	1,080	0	1	0	1	0	2	4	2,160	2%
UNIT B.1 TYPE 'A'*	2 BR/2 BATH	1,080	1	0	1	0	1	3	6	3,240	3%
UNIT B.2	2 BR/2 BATH	1,091	1	1	1	1	1	5	10	5,455	5%
UNIT B.3	2 BR/2 BATH	1,287	1	1	1	1	1	5	10	6,435	5%
UNIT B.4	2 BR/2 BATH	1,254	1	1	1	1	1	5	10	6,270	5%
UNIT B.5	2 BR/2 BATH	1,250	1	1	1	1	1	5	10	6,250	5%
UNIT C	3 BR/2 BATH	1,360	1	1	1	1	1	5	15	6,800	5%
	* TYPE 'A' ACCESSIBLE DWELLING UNIT; 5 UNITS, 5% OF TOTAL UNITS						TOTALS	100	135	87,060	100%

SHEET NOTES - FLOOR PLAN

1. BEFORE BEGINNING WORK, VERIFY THE EXISTENCE AND LOCATION OF PLUMBING, MECHANICAL AND ELECTRICAL SYSTEMS AND OTHER CONSTRUCTION AFFECTING THE WORK. IF DISCREPANCIES ARE DISCOVERED, NOTIFY ARCHITECT PROMPTLY.
2. ALL DIMENSION STRINGS ARE TO FINISH FACE OF WALL, UNLESS NOTED OTHERWISE.
3. REFER TO STRUCTURAL DRAWINGS FOR ELEMENTS, INCLUDING BUT NOT LIMITED TO POST TENSION CABLES OR OTHER REINFORCEMENT EMBEDDED IN FLOOR SLABS, PRIOR TO CORING OR CUTTING PENETRATIONS.
4. REFER TO SHEET A010 FOR REFERENCED PARTITION TYPES AND DETAILS. WALLS NOT TAGGED ON THESE PLANS SHALL BE PARTITION TYPE S3A-S11, TYPICAL DEMISING AND CORRIDOR WALL TYPES S6A-R12 UNLESS NOTED OTHERWISE.
5. ALL WALLS DIRECTLY BEHIND OR ADJACENT TO PLUMBING FIXTURES SHALL RECEIVE MOISTURE- AND MOLD-RESISTANT GYPSUM BOARD, UNLESS NOTED OTHERWISE.
6. LOCATE ALL DOOR JAMBS 4" FROM ADJACENT PERPENDICULAR WALL, UNLESS NOTED OTHERWISE.
7. PROVIDE BLOCKING AND FRAMING AS INDICATED AND AS REQUIRED TO SUPPORT FACING MATERIALS, FIXTURES, SPECIALTY ITEMS, MILLWORK AND TRIM.

KEYNOTES PER SHEET



A2 2ND FLR PLAN - WEST
1/8" = 1'-0"

eua
milwaukee | madison | green bay | denver | atlanta

PROJECT INFORMATION

HILLDALE PHASE 3 - RESIDENTIAL

401 N SEGOE RD
MADISON, WI 53705

ISSUANCE AND REVISIONS

DATE	DESCRIPTION
10/18/2022	SCHEMATIC DESIGN REVISIONS
03/13/2023	CITY SUBMITTAL

KEY PLAN

SHEET INFORMATION

PROGRESS DOCUMENTS NOT FOR CONSTRUCTION

These documents reflect progress and intent and may be subject to change, including additional detail. These are not final construction documents and shall not be used for final bidding or construction-related purposes.

PROJECT MANAGER JP

PROJECT NUMBER 719494-01

2ND-6TH FLR PLAN - WEST

A102W

© 2023 Eppstein Uhen Architects, Inc.

SHEET NOTES - FLOOR PLAN

1.	BEFORE BEGINNING WORK, VERIFY THE EXISTENCE AND LOCATION OF PLUMBING, MECHANICAL AND ELECTRICAL SYSTEMS AND OTHER CONSTRUCTION AFFECTING THE WORK. IF DISCREPANCIES ARE DISCOVERED, NOTIFY ARCHITECT PROMPTLY.
2.	ALL DIMENSION STRINGS ARE TO FINISH FACE OF WALL, UNLESS NOTED OTHERWISE.
3.	REFER TO STRUCTURAL DRAWINGS FOR ELEMENTS, INCLUDING BUT NOT LIMITED TO POST TENSION CABLES OR OTHER REINFORCEMENT EMBEDDED IN FLOOR SLABS, PRIOR TO CORING OR CUTTING PENETRATIONS.
4.	REFER TO SHEET A010 FOR REFERENCED PARTITION TYPES AND DETAILS. WALLS NOT TAGGED ON THESE PLANS SHALL BE PARTITION TYPE S3A-S11, TYPICAL DEMISING AND CORRIDOR WALL TYPES S6A-R12 UNLESS NOTED OTHERWISE.
5.	ALL WALLS DIRECTLY BEHIND OR ADJACENT TO PLUMBING FIXTURES SHALL RECEIVE MOISTURE- AND MOLD-RESISTANT GYPSUM BOARD, UNLESS NOTED OTHERWISE.
6.	LOCATE ALL DOOR JAMBS 4" FROM ADJACENT PERPENDICULAR WALL, UNLESS NOTED OTHERWISE.
7.	PROVIDE BLOCKING AND FRAMING AS INDICATED AND AS REQUIRED TO SUPPORT FACING MATERIALS, FIXTURES, SPECIALTY ITEMS, MILLWORK AND TRIM.

KEYNOTES PER SHEET

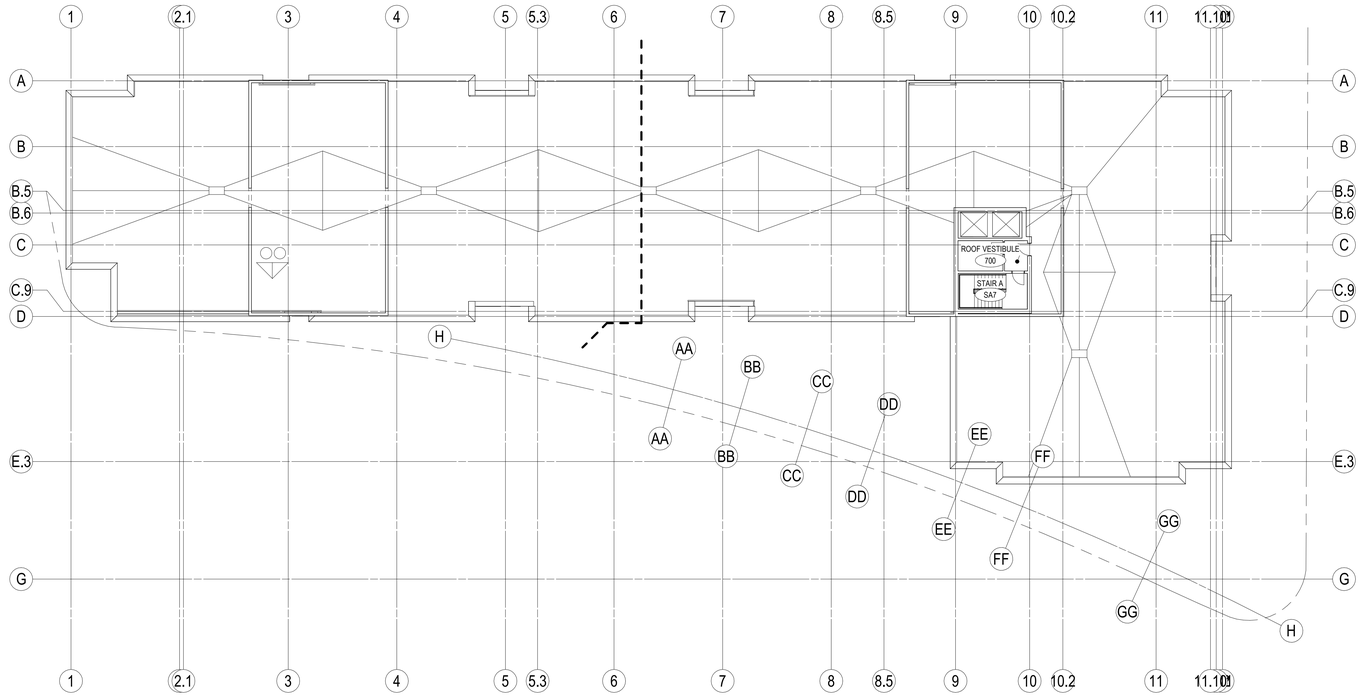

A3 ROOF
1/16" = 1'-0"

eua
milwaukee | madison | green bay | denver | atlanta

PROJECT INFORMATION

HILLDALE PHASE 3 - RESIDENTIAL

401 N SEGOE RD
MADISON, WI 53705

ISSUANCE AND REVISIONS

DATE	DESCRIPTION
03/13/2023	CITY SUBMITTAL

KEY PLAN

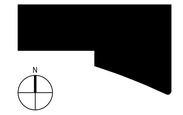

SHEET INFORMATION

PROGRESS DOCUMENTS NOT FOR CONSTRUCTION

These documents reflect progress and intent and may be subject to change, including additional detail. These are not final construction documents and shall not be used for final bidding or construction-related purposes.

PROJECT MANAGER	JP
PROJECT NUMBER	719494-01

ROOF PLAN - OVERALL

A107

© 2023 Eppstein Uhen Architects, Inc.

SHEET NOTES - ROOF PLAN

1.	ALL CONTRACTORS SHALL COORDINATE AND LOCATE ALL ROOF OPENINGS AND PENETRATIONS WITH STRUCTURAL, PLUMBING, MECHANICAL AND ELECTRICAL DRAWINGS.
2.	PROVIDE WATER TIGHT INTEGRITY AT ALL PENETRATIONS AND EQUIPMENT PER ROOFING MANUFACTURERS STANDARD DETAILS AND REQUIREMENT FOR WARRANTY AND CURRENT NRCA STANDARDS.
3.	PROVIDE 4'-0" X 4'-0" PANS AT ROOF DRAINS TO ACCOMMODATE FOR SLOPE AT ACTUAL LOCATION OF ROOF DRAINS AT COLUMNS.
4.	PROVIDE TAPERED INSULATION SADDLES AND CRICKETS AT 1/4" PER FOOT AT ALL ROOF TOP EQUIPMENT AND PENETRATIONS TO ENSURE POSITIVE DRAINAGE.

ROOF PLAN LEGEND

RD	ROOF DRAIN
OFD	OVERFLOW DRAIN
	MEMBRANE ROOF PAVER
X"	INSULATION THICKNESS
	SLOPE DIRECTION OF ROOF & TAPERED INSULATION
	CRICKETS AND SADDLES

SEE SHEET A000 FOR ROOF ASSEMBLY INFORMATION

KEYNOTES PER SHEET

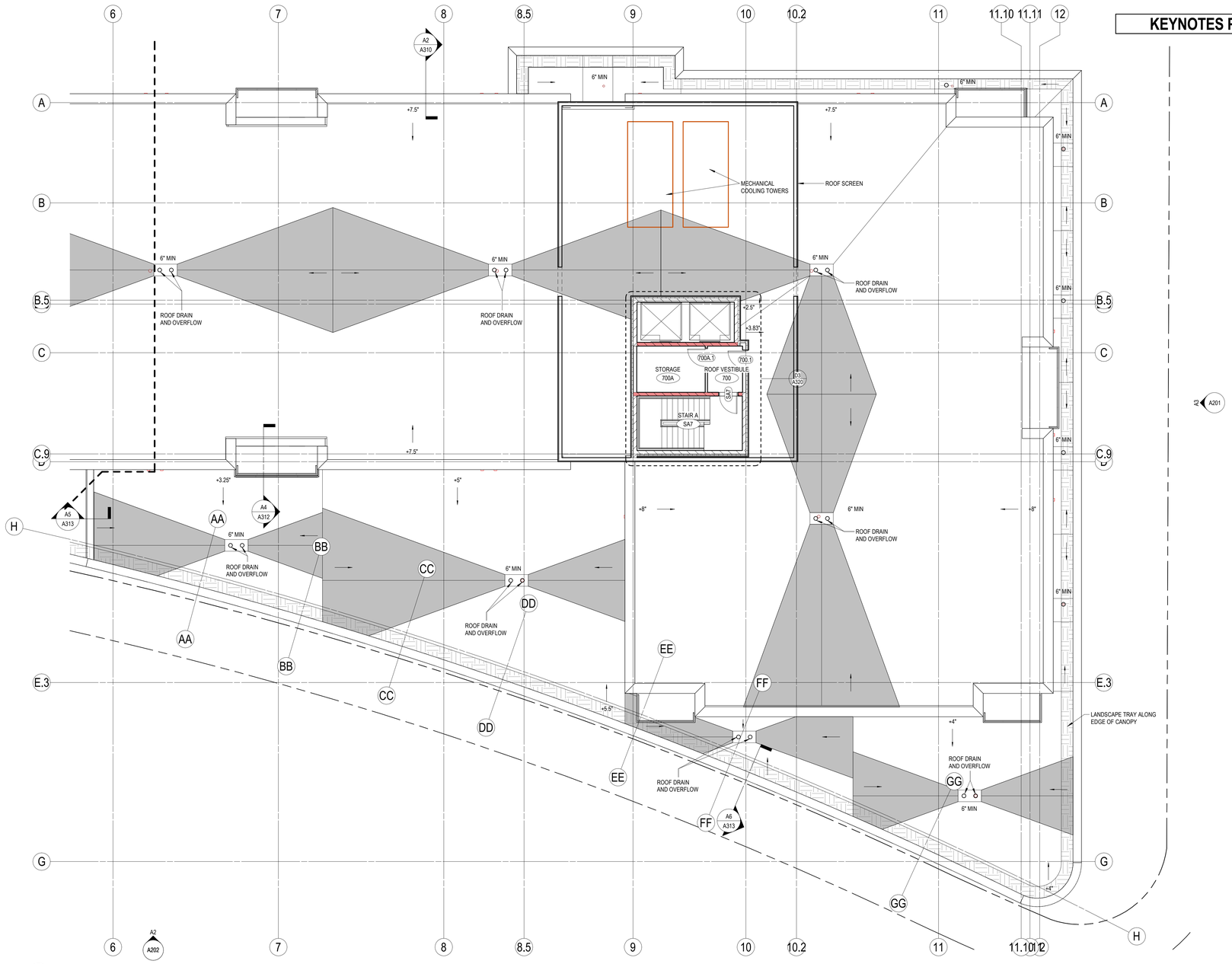

1 ROOF PLAN - EAST
1/8" = 1'-0"

milwaukee | madison | green bay | denver | atlanta

PROJECT INFORMATION

HILLDALE PHASE 3 - RESIDENTIAL

401 N SEGOE RD
MADISON, WI 53705

ISSUANCE AND REVISIONS

DATE	DESCRIPTION
03/13/2023	CITY SUBMITTAL

KEY PLAN

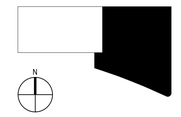

SHEET INFORMATION

PROGRESS DOCUMENTS NOT FOR CONSTRUCTION

These documents reflect progress and intent and may be subject to change, including additional detail. These are not final construction documents and shall not be used for final bidding or construction-related purposes.

PROJECT MANAGER	JP
PROJECT NUMBER	719494-01

ROOF PLAN - EAST

A107E

© 2023 Eppstein Uhen Architects, Inc.

SHEET NOTES - ROOF PLAN

1.	ALL CONTRACTORS SHALL COORDINATE AND LOCATE ALL ROOF OPENINGS AND PENETRATIONS WITH STRUCTURAL, PLUMBING, MECHANICAL AND ELECTRICAL DRAWINGS.
2.	PROVIDE WATER TIGHT INTEGRITY AT ALL PENETRATIONS AND EQUIPMENT PER ROOFING MANUFACTURERS STANDARD DETAILS AND REQUIREMENT FOR WARRANTY AND CURRENT NRCA STANDARDS.
3.	PROVIDE 4'-0" X 4'-0" PANS AT ROOF DRAINS TO ACCOMMODATE FOR SLOPE AT ACTUAL LOCATION OF ROOF DRAINS AT COLUMNS.
4.	PROVIDE TAPERED INSULATION SADDLES AND CRICKETS AT 1/4" PER FOOT AT ALL ROOF TOP EQUIPMENT AND PENETRATIONS TO ENSURE POSITIVE DRAINAGE.

ROOF PLAN LEGEND

RD	ROOF DRAIN
OFD	OVERFLOW DRAIN
	MEMBRANE ROOF PAVER
X"	INSULATION THICKNESS
←	SLOPE DIRECTION OF ROOF & TAPERED INSULATION
	CRICKETS AND SADDLES

SEE SHEET A000 FOR ROOF ASSEMBLY INFORMATION

KEYNOTES PER SHEET

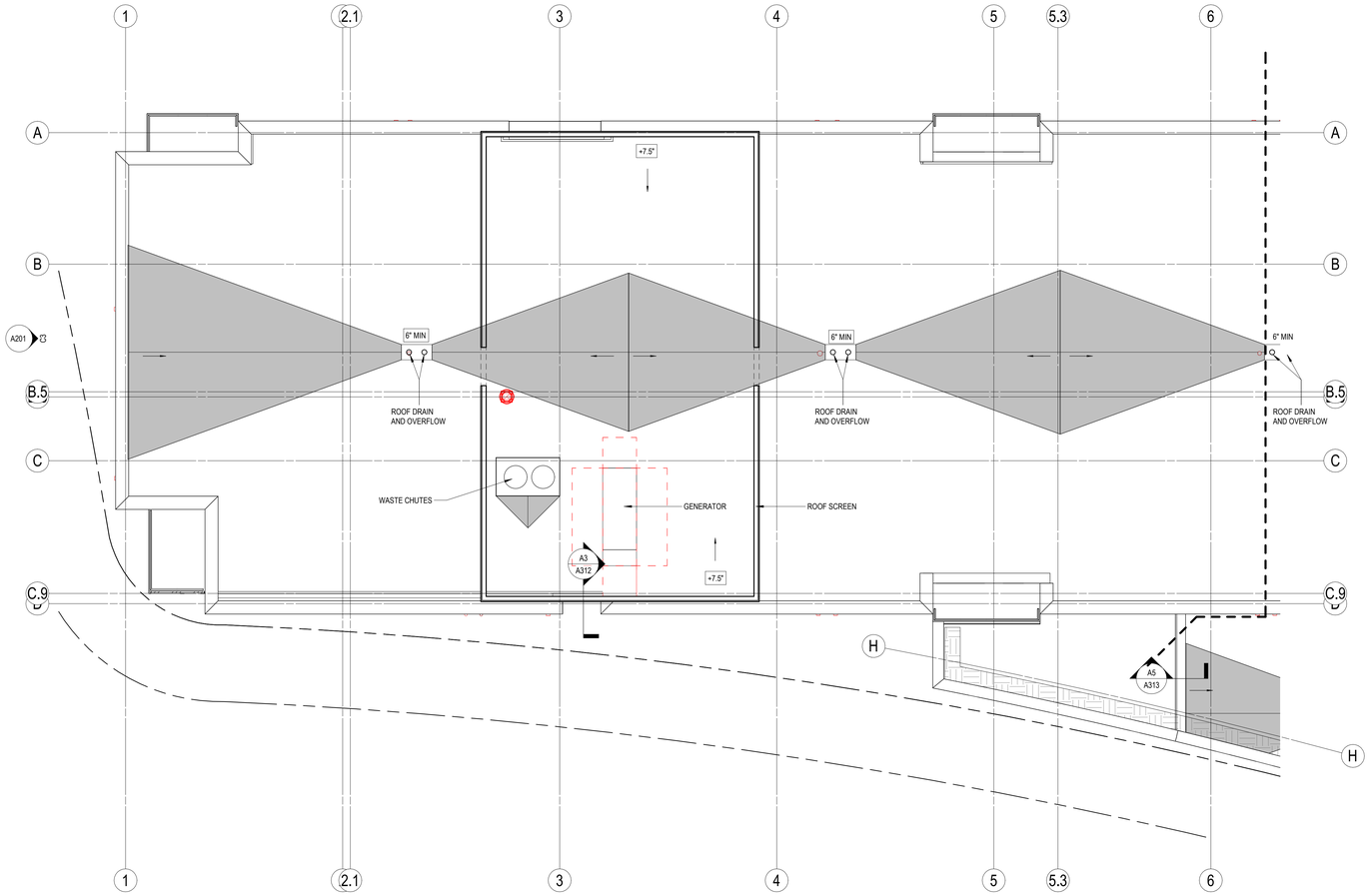

1 ROOF PLAN - WEST
1/8" = 1'-0"

eua
milwaukee | madison | green bay | denver | atlanta

PROJECT INFORMATION

HILLDALE PHASE 3 - RESIDENTIAL

401 N SEGOE RD
MADISON, WI 53705

ISSUANCE AND REVISIONS

DATE	DESCRIPTION
03/13/2023	CITY SUBMITTAL

KEY PLAN

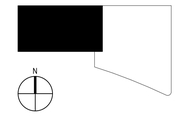

SHEET INFORMATION

PROGRESS DOCUMENTS NOT FOR CONSTRUCTION

These documents reflect progress and intent and may be subject to change, including additional detail. These are not final construction documents and shall not be used for final bidding or construction-related purposes.

PROJECT MANAGER	JP
PROJECT NUMBER	719494-01

ROOF PLAN - WEST

A107W

© 2023 Eppstein Uhen Architects, Inc.

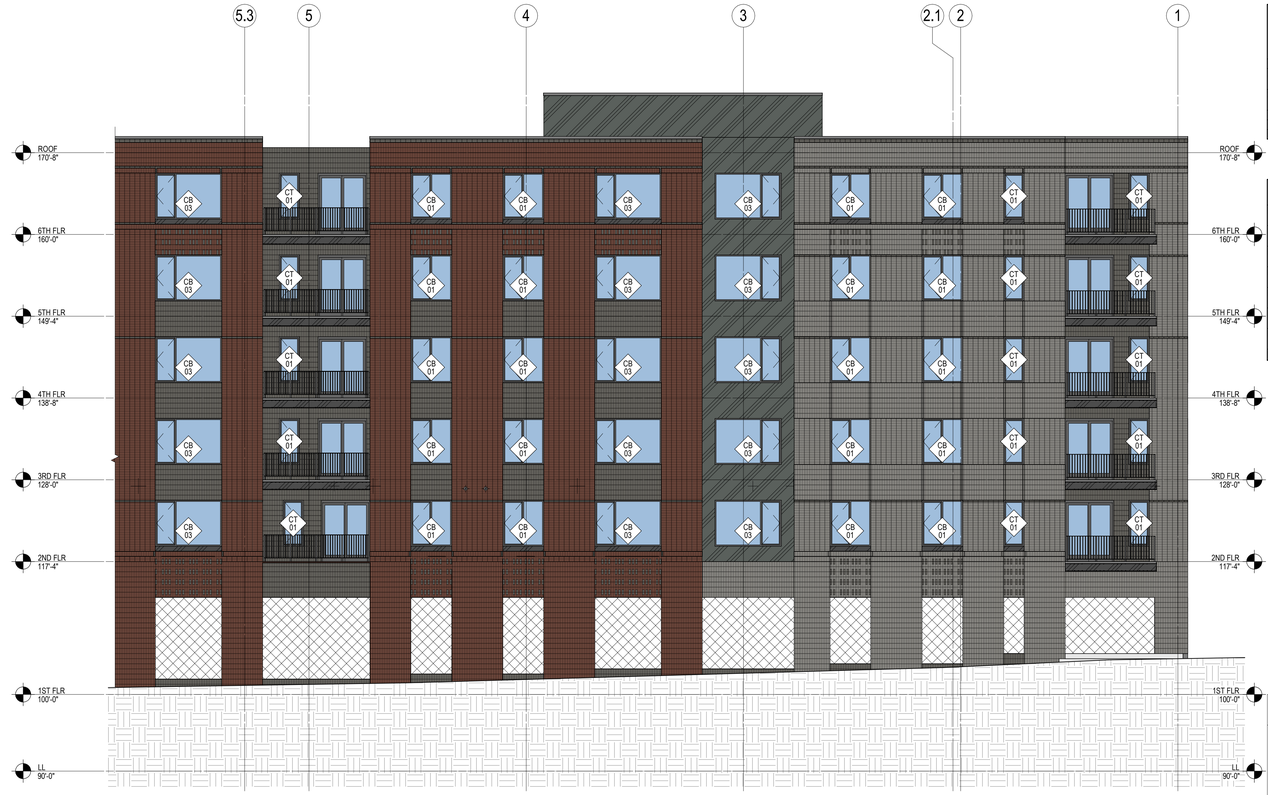

C3 NORTH - WEST
1/8" = 1'-0"

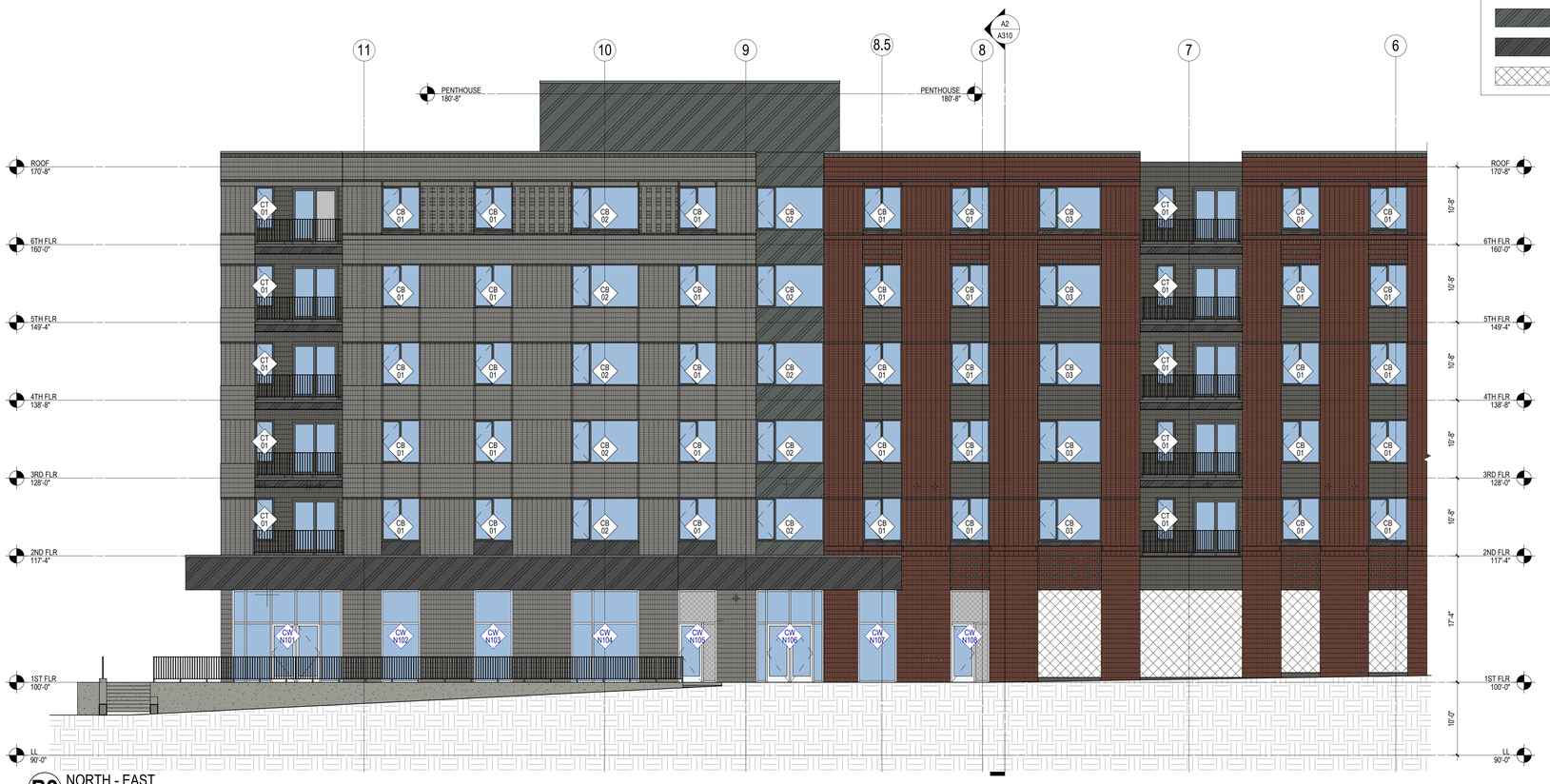

B2 NORTH - EAST
1/8" = 1'-0"

SHEET NOTES - EXTERIOR ELEVATIONS

1.	SEE SHEET A220-A222 FOR EXTERIOR FRAME TYPES AND DIMENSIONS.
2.	ALL OUTSIDE CORNERS OF MASONRY TO BE BULLNOSED INCLUDING OPENING JAMBS.
3.	EXTERIOR SIGNAGE ON BUILDING TO BE COORDINATED AND VERIFIED WITH ARCHITECT, OWNER AND SIGNAGE VENDOR.
4.	ALL VERTICAL INSIDE CORNERS TO HAVE 1/2" MOVEMENT JOINT.
5.	MJ = INDICATES MOVEMENT JOINT - 1/2" GAP.
6.	PJ = INDICATES METAL PANEL JOINT - 1/2" GAP.

KEYNOTES PER SHEET

B-1A	GLEN-GERY REVERE PEWTER VELOUR, MODULAR BRICK, STACK STRETCHER BOND
B-1B	GLEN-GERY REVERE PEWTER VELOUR, MODULAR BRICK, SOLDIER STRETCHER BOND
B-2A	BELDEN BRICK CO. COLONY BLEND, MODULAR BRICK, STACK STRETCHER BOND
B-2B	BELDEN BRICK CO. COLONY BLEND, MODULAR BRICK, SOLDIER STRETCHER BOND
B-3	GLEN-GERY EBONITE SMOOTH, MODULAR BRICK, SOLDIER STRETCHER BOND
MP-1	ALUMINUM COMPOSITE PANEL, ALUCOBOND PLUS, SAGE GREEN, STANDING SEAM BATTENS
MP-2	ZINC COMPOSITE PANEL, FAIRVIEW ARCHITECTURAL VITRABOND, FAUX ZINC FARK, FLAT FINISH, STANDING SEAM BATTENS
MS-1	EXPANDED METAL MESH PRIVACY SCREEN

EXTERIOR MATERIAL KEY

- GLEN-GERY REVERE PEWTER VELOUR, MODULAR BRICK, STACK STRETCHER BOND
- GLEN-GERY REVERE PEWTER VELOUR, MODULAR BRICK, SOLDIER STRETCHER BOND
- BELDEN BRICK CO. COLONY BLEND, MODULAR BRICK, STACK STRETCHER BOND
- BELDEN BRICK CO. COLONY BLEND, MODULAR BRICK, SOLDIER STRETCHER BOND
- GLEN-GERY EBONITE SMOOTH, MODULAR BRICK, SOLDIER STRETCHER BOND
- ALUMINUM COMPOSITE PANEL, ALUCOBOND PLUS, SAGE GREEN, STANDING SEAM BATTENS
- ZINC COMPOSITE PANEL, FAIRVIEW ARCHITECTURAL VITRABOND, FAUX ZINC FARK, FLAT FINISH, STANDING SEAM BATTENS
- EXPANDED METAL MESH PRIVACY SCREEN

eua

milwaukee | madison | green bay | denver | atlanta

PROJECT INFORMATION

HILLDALE PHASE 3 - RESIDENTIAL

401 N SEGOE RD
MADISON, WI 53705

ISSUANCE AND REVISIONS

DATE	DESCRIPTION
03/13/2023	CITY SUBMITTAL

KEY PLAN

SHEET INFORMATION

PROGRESS DOCUMENTS NOT FOR CONSTRUCTION

These documents reflect progress and intent and may be subject to change, including additional detail. These are not final construction documents and shall not be used for final bidding or construction-related purposes.

PROJECT MANAGER	JP
PROJECT NUMBER	719494-01

EXTERIOR ELEVATION - NORTH

A200

© 2023 Eppstein Uhen Architects, Inc.



C3 WEST
1/8" = 1'-0"



A3 EAST
1/8" = 1'-0"

SHEET NOTES - EXTERIOR ELEVATIONS

1.	SEE SHEET A220-A222 FOR EXTERIOR FRAME TYPES AND DIMENSIONS.
2.	ALL OUTSIDE CORNERS OF MASONRY TO BE BULLNOSED INCLUDING OPENING JAMBS.
3.	EXTERIOR SIGNAGE ON BUILDING TO BE COORDINATED AND VERIFIED WITH ARCHITECT, OWNER AND SIGNAGE VENDOR.
4.	ALL VERTICAL INSIDE CORNERS TO HAVE 1/2" MOVEMENT JOINT.
5.	MJ = INDICATES MOVEMENT JOINT - 1/2" GAP.
6.	PJ = INDICATES METAL PANEL JOINT - 1/2" GAP.

KEYNOTES PER SHEET

B-1A	GLEN-GERY REVERE PEWTER VELOUR, MODULAR BRICK, STACK STRETCHER BOND
B-1B	GLEN-GERY REVERE PEWTER VELOUR, MODULAR BRICK, SOLDIER STRETCHER BOND
B-2A	BELDEN BRICK CO. COLONY BLEND, MODULAR BRICK, STACK STRETCHER BOND
B-2B	BELDEN BRICK CO. COLONY BLEND, MODULAR BRICK, SOLDIER STRETCHER BOND
B-3	GLEN-GERY EBONITE SMOOTH, MODULAR BRICK, SOLDIER STRETCHER BOND
MP-1	ALUMINUM COMPOSITE PANEL, ALUCOBOND PLUS, SAGE GREEN, STANDING SEAM BATTENS
MP-2	ZINC COMPOSITE PANEL, FAIRVIEW ARCHITECTURAL VITRABOND, FAUX ZINC FARK, FLAT FINISH, STANDING SEAM BATTENS
MS-1	EXPANDED METAL MESH PRIVACY SCREEN

EXTERIOR MATERIAL KEY

- GLEN-GERY REVERE PEWTER VELOUR, MODULAR BRICK, STACK STRETCHER BOND
- GLEN-GERY REVERE PEWTER VELOUR, MODULAR BRICK, SOLDIER STRETCHER BOND
- BELDEN BRICK CO. COLONY BLEND, MODULAR BRICK, STACK STRETCHER BOND
- BELDEN BRICK CO. COLONY BLEND, MODULAR BRICK, SOLDIER STRETCHER BOND
- GLEN-GERY EBONITE SMOOTH, MODULAR BRICK, SOLDIER STRETCHER BOND
- ALUMINUM COMPOSITE PANEL, ALUCOBOND PLUS, SAGE GREEN, STANDING SEAM BATTENS
- ZINC COMPOSITE PANEL, FAIRVIEW ARCHITECTURAL VITRABOND, FAUX ZINC FARK, FLAT FINISH, STANDING SEAM BATTENS
- EXPANDED METAL MESH PRIVACY SCREEN

eua

milwaukee | madison | green bay | denver | atlanta

PROJECT INFORMATION

HILLDALE PHASE 3 - RESIDENTIAL

401 N SEGOE RD
MADISON, WI 53705

ISSUANCE AND REVISIONS

DATE	DESCRIPTION
10/18/2022	SCHEMATIC DESIGN REVISIONS
03/13/2023	CITY SUBMITTAL

KEY PLAN

SHEET INFORMATION

PROGRESS DOCUMENTS NOT FOR CONSTRUCTION

These documents reflect progress and intent and may be subject to change, including additional detail. These are not final construction documents and shall not be used for final bidding or construction-related purposes.

PROJECT MANAGER JP

PROJECT NUMBER 719494-01

EXTERIOR ELEVATION - EAST & WEST

A201

© 2023 Eppstein Uhen Architects, Inc.



C3 SOUTH - WEST
1/8" = 1'-0"



A2 SOUTH - EAST
1/8" = 1'-0"

SHEET NOTES - EXTERIOR ELEVATIONS

1.	SEE SHEET A220-A222 FOR EXTERIOR FRAME TYPES AND DIMENSIONS.
2.	ALL OUTSIDE CORNERS OF MASONRY TO BE BULLNOSED INCLUDING OPENING JAMBS.
3.	EXTERIOR SIGNAGE ON BUILDING TO BE COORDINATED AND VERIFIED WITH ARCHITECT, OWNER AND SIGNAGE VENDOR.
4.	ALL VERTICAL INSIDE CORNERS TO HAVE 1/2" MOVEMENT JOINT.
5.	MJ = INDICATES MOVEMENT JOINT - 1/2" GAP.
6.	PJ = INDICATES METAL PANEL JOINT - 1/2" GAP.

KEYNOTES PER SHEET

B-1A	GLEN-GERY REVERE PEWTER VELOUR, MODULAR BRICK, STACK STRETCHER BOND
B-1B	GLEN-GERY REVERE PEWTER VELOUR, MODULAR BRICK, SOLDIER STRETCHER BOND
B-2A	BELDEN BRICK CO. COLONY BLEND, MODULAR BRICK, STACK STRETCHER BOND
B-2B	BELDEN BRICK CO. COLONY BLEND, MODULAR BRICK, SOLDIER STRETCHER BOND
B-3	GLEN-GERY EBONITE SMOOTH, MODULAR BRICK, SOLDIER STRETCHER BOND
MP-1	ALUMINUM COMPOSITE PANEL, ALUCOBOND PLUS, SAGE GREEN, STANDING SEAM BATTENS
MP-2	ZINC COMPOSITE PANEL, FAIRVIEW ARCHITECTURAL VITRABOND, FAUX ZINC FARK, FLAT FINISH, STANDING SEAM BATTENS
MS-1	EXPANDED METAL MESH PRIVACY SCREEN

EXTERIOR MATERIAL KEY

- GLEN-GERY REVERE PEWTER VELOUR, MODULAR BRICK, STACK STRETCHER BOND
- GLEN-GERY REVERE PEWTER VELOUR, MODULAR BRICK, SOLDIER STRETCHER BOND
- BELDEN BRICK CO. COLONY BLEND, MODULAR BRICK, STACK STRETCHER BOND
- BELDEN BRICK CO. COLONY BLEND, MODULAR BRICK, SOLDIER STRETCHER BOND
- GLEN-GERY EBONITE SMOOTH, MODULAR BRICK, SOLDIER STRETCHER BOND
- ALUMINUM COMPOSITE PANEL, ALUCOBOND PLUS, SAGE GREEN, STANDING SEAM BATTENS
- ZINC COMPOSITE PANEL, FAIRVIEW ARCHITECTURAL VITRABOND, FAUX ZINC FARK, FLAT FINISH, STANDING SEAM BATTENS
- EXPANDED METAL MESH PRIVACY SCREEN

eua
milwaukee | madison | green bay | denver | atlanta

PROJECT INFORMATION

HILLDALE PHASE 3 - RESIDENTIAL

401 N SEGOE RD
MADISON, WI 53705

ISSUANCE AND REVISIONS

DATE	DESCRIPTION
03/13/2023	CITY SUBMITTAL

KEY PLAN

SHEET INFORMATION

PROGRESS DOCUMENTS NOT FOR CONSTRUCTION

These documents reflect progress and intent and may be subject to change, including additional detail. These are not final construction documents and shall not be used for final bidding or construction-related purposes.

PROJECT MANAGER	JP
PROJECT NUMBER	719494-01

EXTERIOR ELEVATION - SOUTH

A202

© 2023 Eppstein Uhen Architects, Inc.

KEYNOTES PER SHEET



C2 BUILDING SECTION - WEST
1/8" = 1'-0"



A2 BUILDING SECTION - EAST
1/8" = 1'-0"

eua
milwaukee | madison | green bay | denver | atlanta

PROJECT INFORMATION

HILLDALE PHASE 3 - RESIDENTIAL

401 N SEGOE RD
MADISON, WI 53705

ISSUANCE AND REVISIONS

DATE	DESCRIPTION
03/13/2023	CITY SUBMITTAL

KEY PLAN

SHEET INFORMATION

PROGRESS DOCUMENTS NOT FOR CONSTRUCTION

These documents reflect progress and intent and may be subject to change, including additional detail. These are not final construction documents and shall not be used for final bidding or construction-related purposes.

PROJECT MANAGER	JP
PROJECT NUMBER	719494-01

BUILDING SECTIONS - EAST/WEST

A300

© 2023 Eppstein Uhen Architects, Inc.

KEYNOTES PER SHEET

eua
milwaukee | madison | green bay | denver | atlanta

PROJECT INFORMATION

HILLDALE PHASE 3 - RESIDENTIAL

401 N SEGOE RD
MADISON, WI 53705

ISSUANCE AND REVISIONS

DATE	DESCRIPTION
03/13/2023	CITY SUBMITTAL

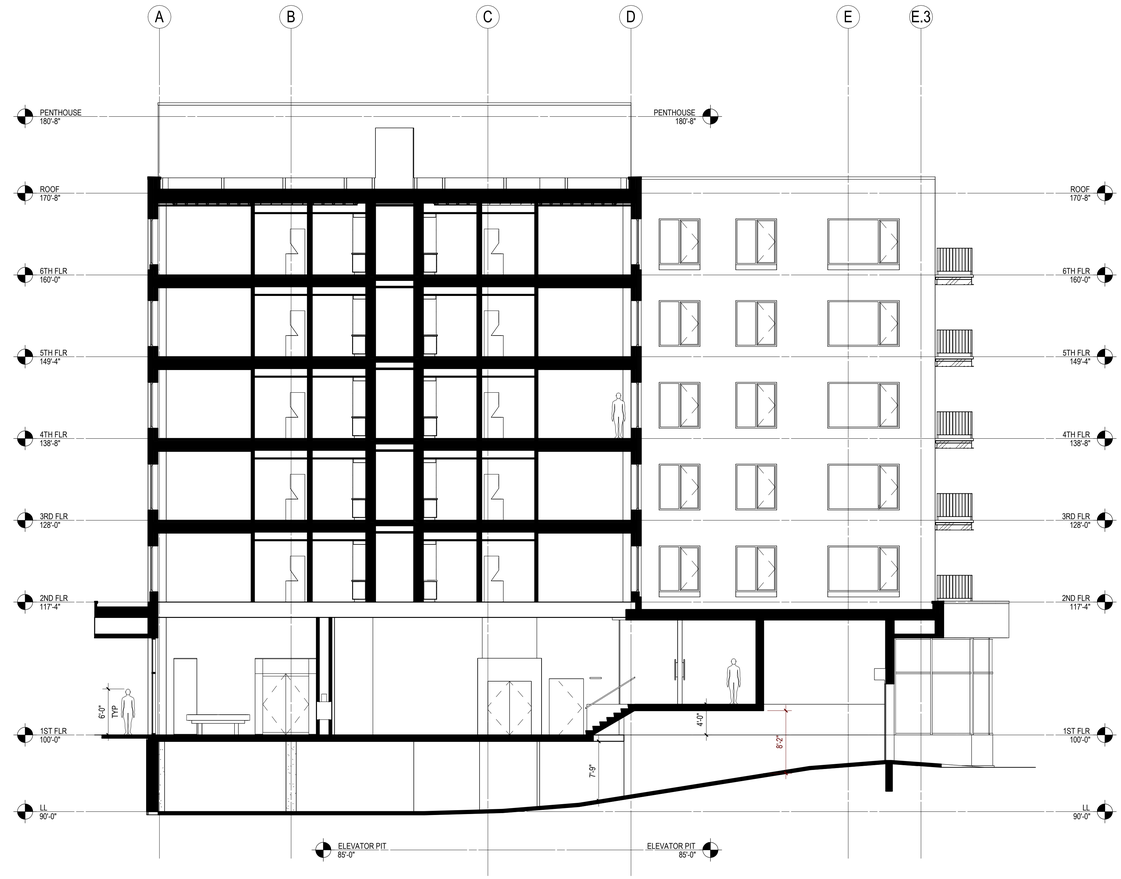

A3 BUILDING SECTION - NORTH-SOUTH
1/8" = 1'-0"

KEY PLAN

SHEET INFORMATION

PROGRESS DOCUMENTS NOT FOR CONSTRUCTION

These documents reflect progress and intent and may be subject to change, including additional detail. These are not final construction documents and shall not be used for final bidding or construction-related purposes.

PROJECT MANAGER	JP
PROJECT NUMBER	719494-01

BUILDING SECTIONS - NORTH/SOUTH

A301

© 2023 Eppstein Uhen Architects, Inc.

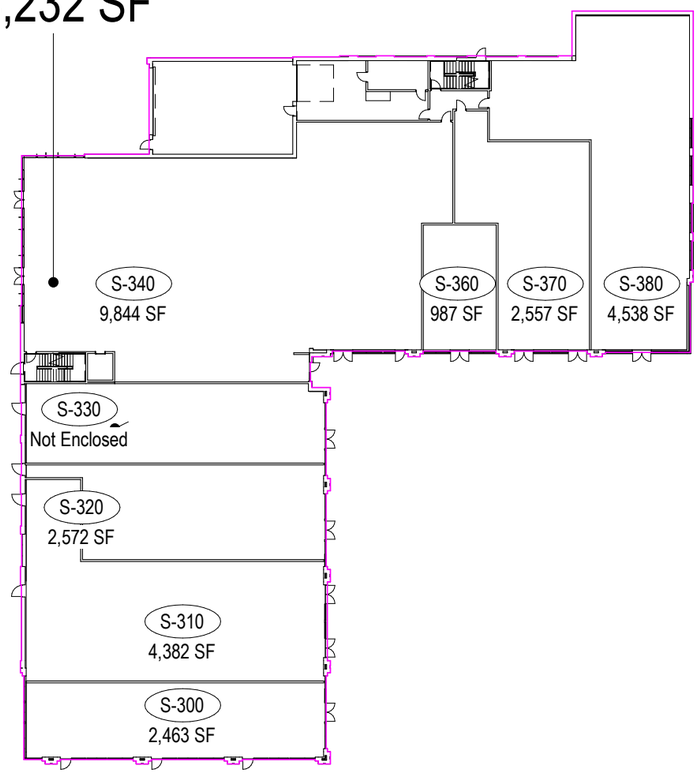

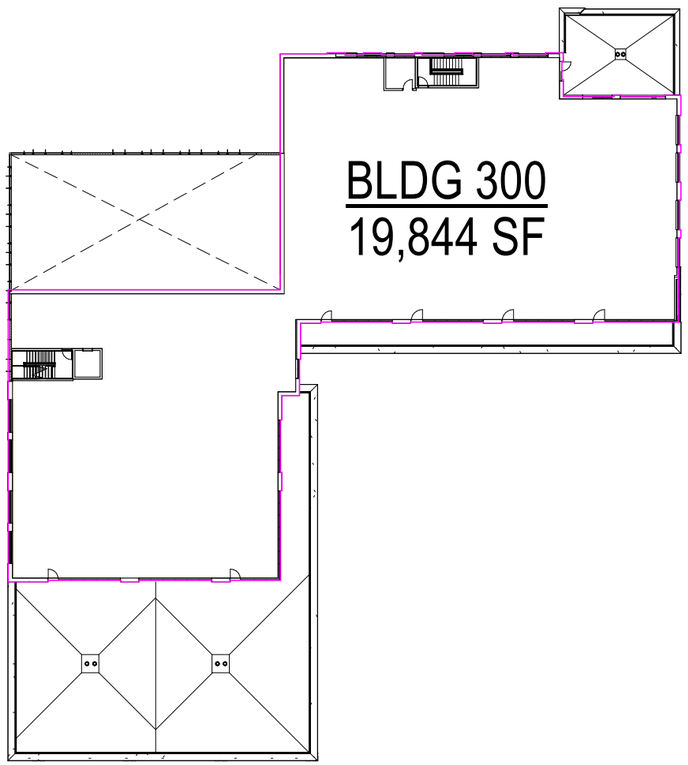

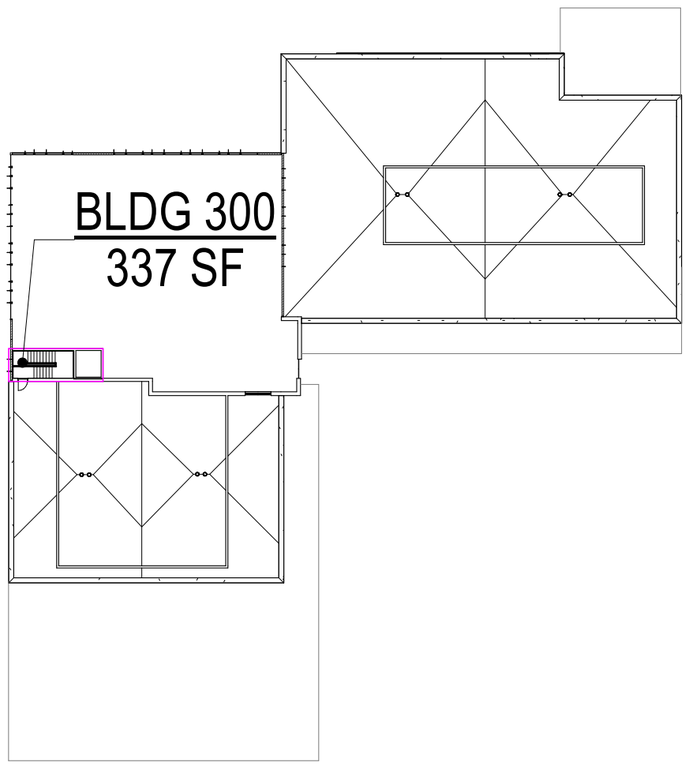

BLDG 300 - 1ST FLR

BLDG 300 - 2ND FLR

BLDG 300 - 3RD FLR

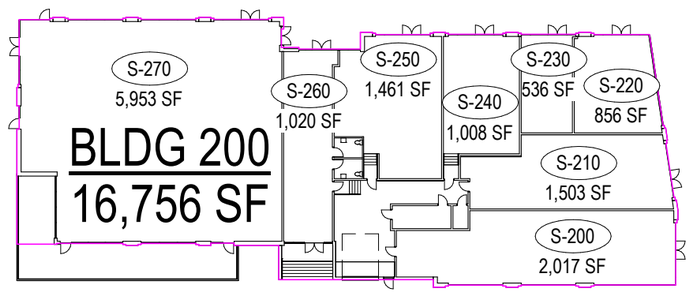

BLDG 200 - 1ST FLR

BUILDING 200 - GSF		
Name	Level	Area
BLDG 200	BLDG 200 - 1ST FLR	16,756 SF
Grand total: 1		16,756 SF

BUILDING 300 - GSF		
Name	Level	Area
BLDG 300	BLDG 300 - 1ST FLR	34,232 SF
BLDG 300	BLDG 300 - 2ND FLR	19,844 SF
BLDG 300	BLDG 300 - LOW ROOF	337 SF
Grand total: 3		54,413 SF

© 2023 Eppstein Uhen Architects, Inc.

KEYNOTES PER SHEET

Bird Glass Key:

Green outline indicates facade area

Blue outline indicates window area

Glass with no fill indicates bird glass

Magenta outline/fill indicates no bird glass

SHEET NOTES - EXTERIOR ELEVATIONS

1.	REFER TO BUILDING 200 AND 300 NARRATIVE FOR DETAILED EXPLANATION OF EXTERIOR MATERIALS
2.	PROVIDE CONTINUOUS SEALANT AND BACKER ROD AT ALL PRECAST CONCRETE JOINTS.
3.	ALL INSIDE AND OUTSIDE CORNERS OF PRECAST TRIM TO NOT BE MITERED.
4.	EXTERIOR SIGNAGE ON BUILDING TO BE COORDINATED AND VERIFIED WITH ARCHITECT, OWNER AND SIGNAGE VENDOR.

EXTERIOR MATERIALS

BC-1	MASONRY BRICK
BC-2	MASONRY BRICK
BC-3	MASONRY BRICK
BC-4	MASONRY BRICK
BC-5	MASONRY BRICK
BC-6	MASONRY BRICK
BC-7	MASONRY BRICK
C-1	BOARD FORMED CONCRETE
MC-1	CORRUGATED METAL
MC-2	CORRUGATED METAL
MP-1	METAL PANEL
MP-2	METAL PANEL
MP-3	METAL PANEL
MS-1	METAL PANEL SCREEN
S-1	STONE
S-2	STONE
S-3	STONE
E1	ALUMINUM PARAPET FLASHING
E2	METAL PIPE HANDRAIL
E3	PARAPET-MOUNTED METAL PIPE HANDRAIL
E4	PERFORATED METAL SIGN BAND
E5	STEEL OVERHEAD DOOR
E6	METAL FINS (2X7) PROJECTING FROM METAL FAÇADE. MATERIAL, FINISH TO MATCH FAÇADE PANELS
E7	AWNINGS, MASONRY PAINTED BY TENANT
E8	MURAL GRAPHICS BY DEVELOPER

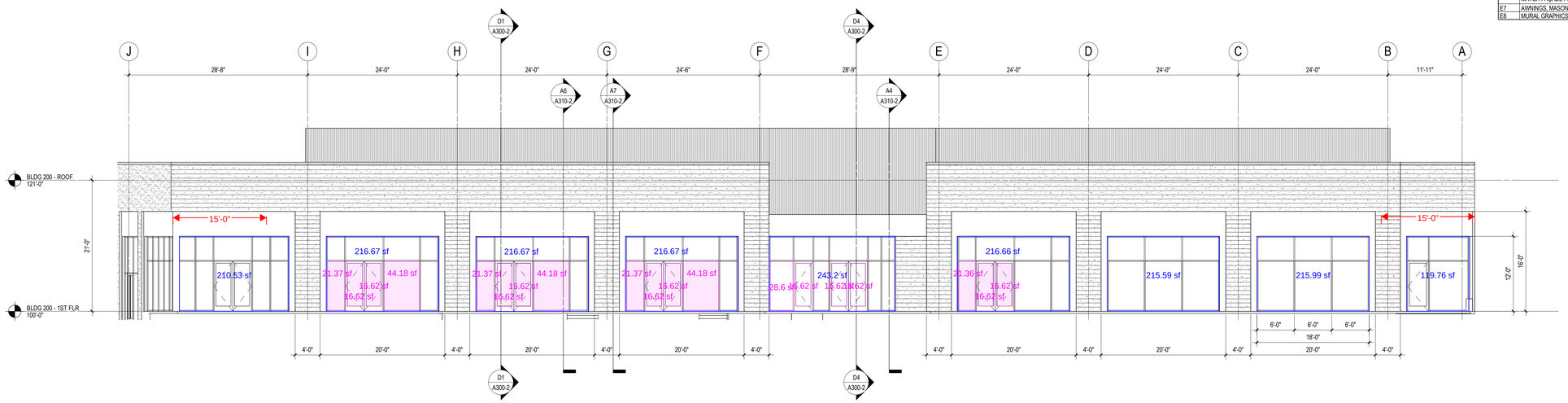

C1 WEST ELEVATION
1/8" = 1'-0"

Figure 1 - Window Mullion Graphic

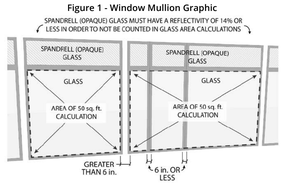

2. For building façades where the first sixty (60) feet from grade are comprised of less than fifty percent (50%) glass:
   a. At least eighty-five percent (85%) of the glass on glass areas fifty (50) square feet or over must be treated; and
   b. Of all glass areas over fifty (50) square feet, any glass within fifteen (15) feet of a building corner must be treated.
3. All glass railings must be treated.
4. All glass on enclosed building connections shall be treated up to sixty (60) feet above-grade.

	East	bird glass req'd	amount of bird glass provided			West	bird glass req'd	amount of bird glass provided		
Total Facade Area	5471				Total Facade Area	5141				
glass area	261	261	261		glass area	211	211	211		
	216	216	216			1302	1202.28	984.26		
	92	73.13	73.13			243	209.76	181.16		
	195	162	162			120	120	120		
	504	504	368		glass total area	1876	1743.04	1496.42	246.62	
	375	375	284		glass % of façade	36.49%				
glass total area	1643	1591.13	1364.13		% bird glass provided vs req'd			85.85%		
glass % of façade	30.03%									
% bird glass provided vs req'd			85.73%							

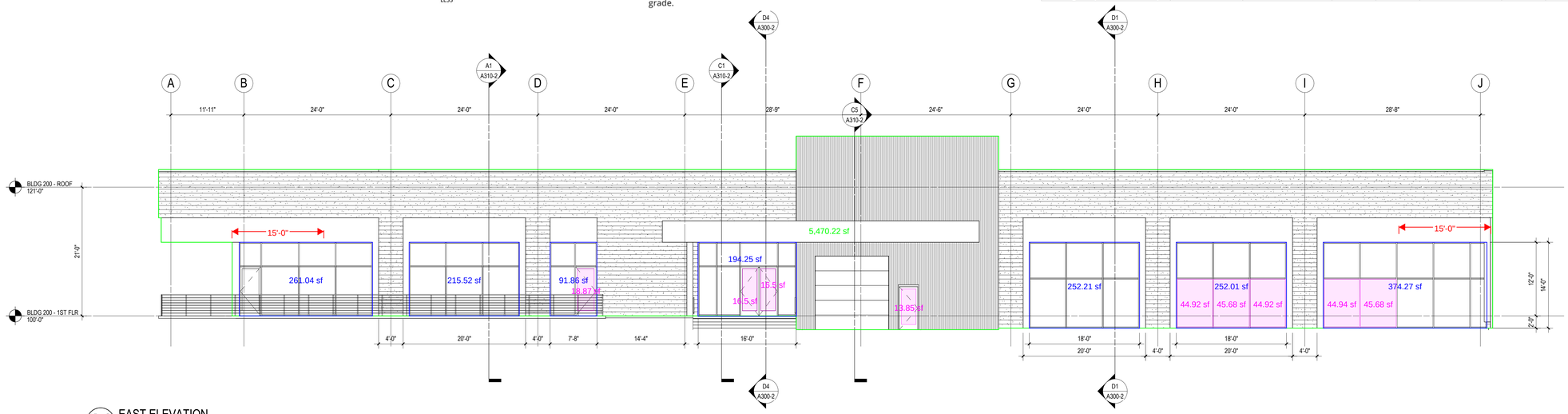

A1 EAST ELEVATION
1/8" = 1'-0"

eua
milwaukee | madison | green bay | denver | atlanta

PROJECT INFORMATION

Hilldale - Phase 3 - Buildings 200 and 300

702 N. Midvale Blvd.
Madison, WI 53705

ISSUANCE AND REVISIONS

DATE	DESCRIPTION
03/13/2023	CITY SUBMITTAL

KEY PLAN

SHEET INFORMATION

PROGRESS DOCUMENTS NOT FOR CONSTRUCTION

These documents reflect progress and intent and may be subject to change, including additional detail. These are not final construction documents and shall not be used for final bidding or construction-related purposes.

PROJECT MANAGER	JP
PROJECT NUMBER	719494-01

EXTERIOR ELEVATIONS - 200

A200-2

© 2022 Eppstein Uhen Architects, Inc.

KEYNOTES PER SHEET

Bird Glass Key:

Green outline indicates facade area

Blue outline indicates window area

Glass with no fill indicates bird glass

Magenta outline/fill indicates no bird glass

SHEET NOTES - EXTERIOR ELEVATIONS

1.	REFER TO BUILDING 200 AND 300 NARRATIVE FOR DETAILED EXPLANATION OF EXTERIOR MATERIALS
2.	PROVIDE CONTINUOUS SEALANT AND BACKER ROD AT ALL PRECAST CONCRETE JOINTS.
3.	ALL INSIDE AND OUTSIDE CORNERS OF PRECAST TRIM TO NOT BE MITERED.
4.	EXTERIOR SIGNAGE ON BUILDING TO BE COORDINATED AND VERIFIED WITH ARCHITECT, OWNER AND SIGNAGE VENDOR.

EXTERIOR MATERIALS

BC-1	MASONRY BRICK
BC-2	MASONRY BRICK
BC-3	MASONRY BRICK
BC-4	MASONRY BRICK
BC-5	MASONRY BRICK
BC-6	MASONRY BRICK
BC-7	MASONRY BRICK
C-1	BOARD FORMED CONCRETE
MC-1	CORRUGATED METAL
MC-2	CORRUGATED METAL
MP-1	METAL PANEL
MP-2	METAL PANEL
MP-3	METAL PANEL
MS-1	METAL PANEL SCREEN
S-1	STONE
S-2	STONE
S-3	STONE
E1	ALUMINUM PARAPET FLASHING
E2	METAL PIPE HANDRAIL
E3	PARAPET-MOUNTED METAL PIPE HANDRAIL
E4	PERFORATED METAL SIGN BAND
E5	STEEL OVERHEAD DOOR
E6	METAL FINS (2X7) PROJECTING FROM METAL FAÇADE. MATERIAL, FINISH TO MATCH FAÇADE PANELS
E7	AWNINGS, MASONRY PAINTED BY TENANT
E8	MURAL GRAPHICS BY DEVELOPER

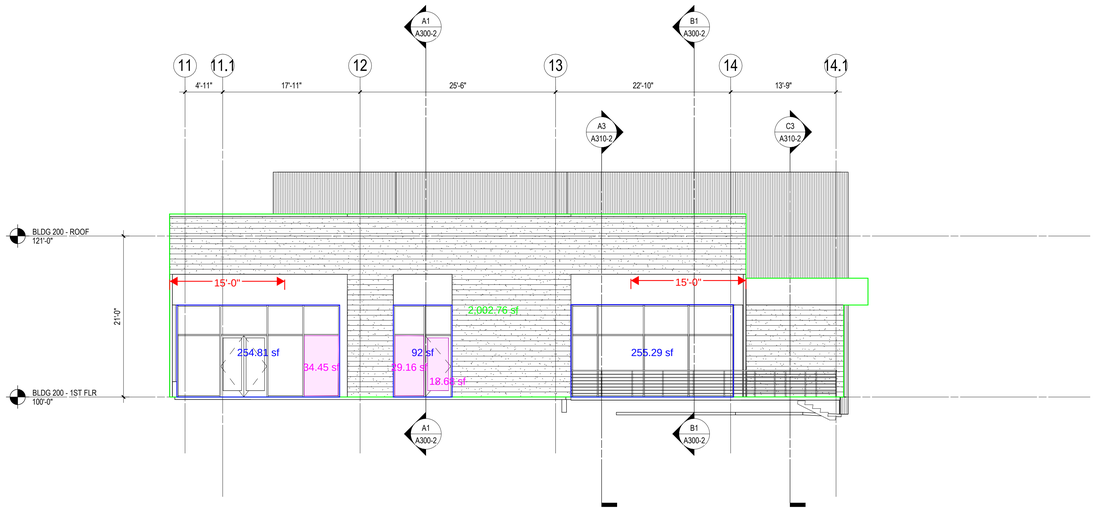

Figure 1 - Window Mullion Graphic

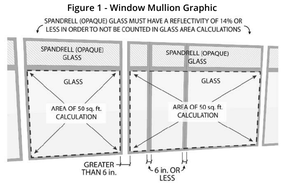

C2 SOUTH ELEVATION
1/8" = 1'-0"

2. For building façades where the first sixty (60) feet from grade are comprised of less than fifty percent (50%) glass:
   a. At least eighty-five percent (85%) of the glass on glass areas fifty (50) square feet or over must be treated; and
   b. Of all glass areas over fifty (50) square feet, any glass within fifteen (15) feet of a building corner must be treated.
3. All glass railings must be treated.
4. All glass on enclosed building connections shall be treated up to sixty (60) feet above-grade.

	North	bird glass req'd	amount of bird glass provided				South	bird glass req'd	amount of bird glass provided	
Total Facade Area	2120					Total Facade Area	2003			
glass area	284	284	284			glass area	254.81	254.81	220.31	
	250	217.28	176.92				92	73.32	44.16	
	364	364	276				255.29	255.29	255.29	
glass total area	898	865.28	736.92			glass total area	602.1	583.42	519.76	
glass % of façade	42.36%					glass % of façade	30.06%			
% bird glass provided vs req'd		85.17%				% bird glass provided vs req'd		89.09%		

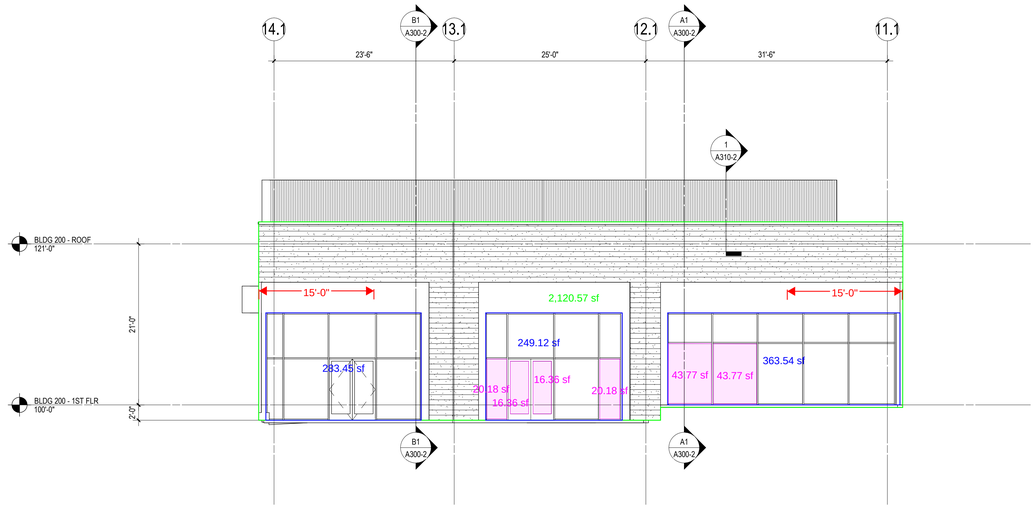

A1 NORTH ELEVATION
1/8" = 1'-0"

milwaukee | madison | green bay | denver | atlanta

PROJECT INFORMATION

Hilldale - Phase 3 - Buildings 200 and 300

702 N. Midvale Blvd.
Madison, WI 53705

ISSUANCE AND REVISIONS

DATE	DESCRIPTION
03/13/2023	CITY SUBMITTAL

KEY PLAN

SHEET INFORMATION

PROGRESS DOCUMENTS NOT FOR CONSTRUCTION

These documents reflect progress and intent and may be subject to change, including additional detail. These are not final construction documents and shall not be used for final bidding or construction-related purposes.

PROJECT MANAGER	JP
PROJECT NUMBER	719494-01

EXTERIOR ELEVATIONS - 200

A201-2

© 2022 Eppstein Uhen Architects, Inc.

KEYNOTES PER SHEET

Bird Glass Key:

Green outline indicates facade area

Blue outline indicates window area

Glass with no fill indicates bird glass

Magenta outline/fill indicates no bird glass

SHEET NOTES - EXTERIOR ELEVATIONS

1.	REFER TO BUILDING 200 AND 300 NARRATIVE FOR DETAILED EXPLANATION OF EXTERIOR MATERIALS
2.	PROVIDE CONTINUOUS SEALANT AND BACKER ROD AT ALL PRECAST CONCRETE JOINTS.
3.	ALL INSIDE AND OUTSIDE CORNERS OF PRECAST TRIM TO NOT BE MITERED.
4.	EXTERIOR SIGNAGE ON BUILDING TO BE COORDINATED AND VERIFIED WITH ARCHITECT, OWNER AND SIGNAGE VENDOR.

EXTERIOR MATERIALS

BC-1	MASONRY BRICK
BC-2	MASONRY BRICK
BC-3	MASONRY BRICK
BC-4	MASONRY BRICK
BC-5	MASONRY BRICK
BC-6	MASONRY BRICK
BC-7	MASONRY BRICK
C-1	BOARD FORMED CONCRETE
MC-1	CORRUGATED METAL
MC-2	CORRUGATED METAL
MP-1	METAL PANEL
MP-2	METAL PANEL
MP-3	METAL PANEL
MS-1	METAL PANEL SCREEN
S-1	STONE
S-2	STONE
S-3	STONE
E1	ALUMINUM PARAPET FLASHING
E2	METAL PIPE HANDRAIL
E3	PARAPET MOUNTED METAL PIPE HANDRAIL
E4	PERFORATED METAL SIGN BAND
E5	STEEL OVERHEAD DOOR
E6	METAL FINS (2X7) PROJECTING FROM METAL FAÇADE. MATERIAL, FINISH TO MATCH FAÇADE PANELS
E7	AWNINGS, MASONRY PAINTED BY TENANT
E8	MURAL GRAPHICS BY DEVELOPER

Figure 1 - Window Mullion Graphic

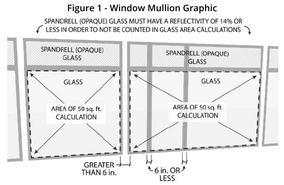

2. For building façades where the first sixty (60) feet from grade are comprised of less than fifty percent (50%) glass:
   a. At least eighty-five percent (85%) of the glass on glass areas fifty (50) square feet or over must be treated; and
   b. Of all glass areas over fifty (50) square feet, any glass within fifteen (15) feet of a building corner must be treated.
3. All glass railings must be treated.
4. All glass on enclosed building connections shall be treated up to sixty (60) feet above-grade.

	East	bird glass req'd	amount of bird glass provided			West	bird glass req'd	amount of bird glass provided
Total Facade Area	10026				Total Facade Area	9369		
glass area	63	63	63		glass area	150	150	150
	864	826.16	826.16			232.5	216.93	216.93
	283	232.96	232.96			94	94	94
	276	242.9	242.9			54	54	54
	276	209.8	209.8			78	78	78
	315	298.45	298.45			264	264	264
	576	576	576			32	32	32
	192	192	192			107	107	107
	283	283	283			493.8	493.8	493.8
	1152	1095.45	1095.45			67	67	67
	283	264.15	264.15			484	484	484
	325	303.17	303.17			202	202	202
	95	95	95			484	484	484
			-694.89			202	202	202
glass total area	4983	4682.04	3987.15					-418.06
glass % of façade	49.70%				glass total area	2944.3		2510.67
% bird glass provided vs req'd			85.16%		glass % of façade	31.43%		
					% bird glass provided vs req'd			85.27%



C1 WEST ELEVATION- 300
1/8" = 1'-0"

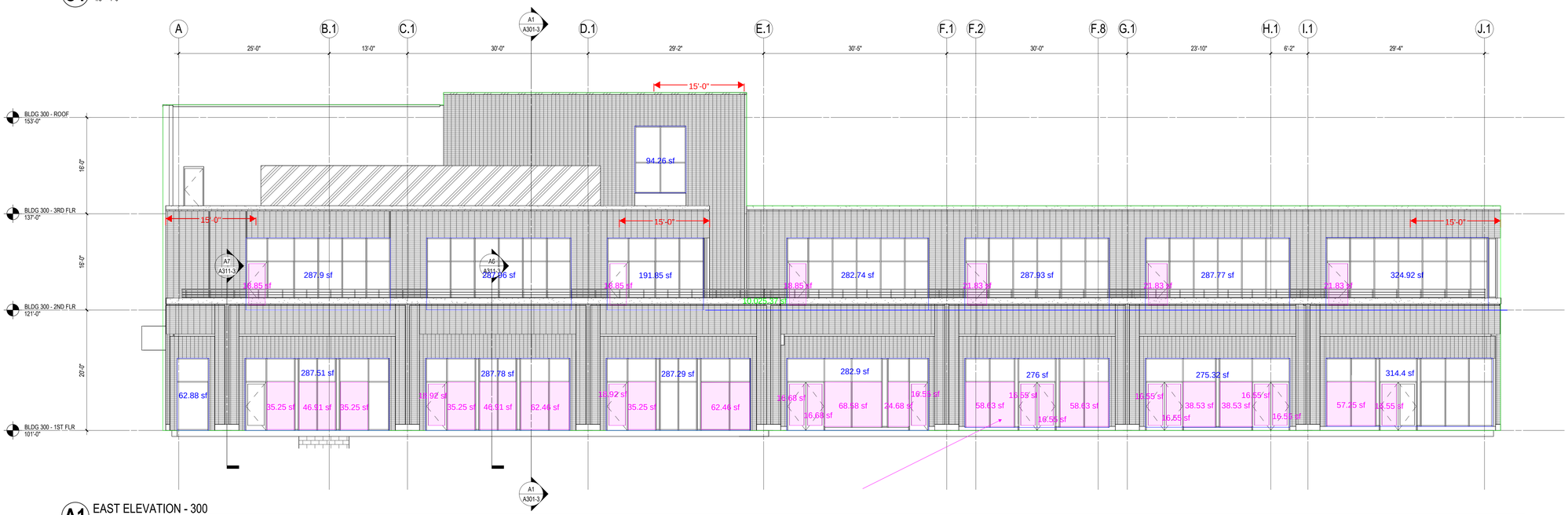

A1 EAST ELEVATION - 300
1/8" = 1'-0"

eppstein uhen architects
milwaukee | madison | green bay | denver | atlanta

PROJECT INFORMATION

Hilldale - Phase 3 - Buildings 200 and 300

702 N. Midvale Blvd.
Madison, WI 53705

ISSUANCE AND REVISIONS

DATE	DESCRIPTION
03/13/2023	CITY SUBMITTAL

KEY PLAN

SHEET INFORMATION

PROGRESS DOCUMENTS NOT FOR CONSTRUCTION

These documents reflect progress and intent and may be subject to change, including additional detail. These are not final construction documents and shall not be used for final bidding or construction-related purposes.

PROJECT MANAGER	JP
PROJECT NUMBER	719494-01

EXTERIOR ELEVATIONS - 300

A202-3

© 2022 Eppstein Uhen Architects, Inc.

Figure 1 - Window Mullion Graphic

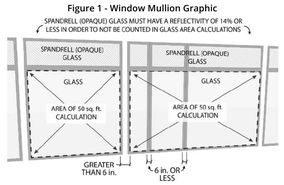

2. For building façades where the first sixty (60) feet from grade are comprised of less than fifty percent (50%) glass:
   a. At least eighty-five percent (85%) of the glass on glass areas fifty (50) square feet or over must be treated; and
   b. Of all glass areas over fifty (50) square feet, any glass within fifteen (15) feet of a building corner must be treated.
3. All glass railings must be treated.
4. All glass on enclosed building connections shall be treated up to sixty (60) feet above-grade.

	North	bird glass req'd	amount of bird glass provided			South	bird glass req'd	amount of bird glass provided
Total Facade Area	9274				Total Facade Area	9229		
glass area	897.06	813.91	813.91		glass area	725	682.52	682.52
	305.64	239.12	239.12			241.25	0	0
	83	66.37	66.37			129	129	129
	246	246	246			100	100	100
	194	194	194			76	76	76
	174	174	174			141	141	141
	222	222	222			555	555	555
	352	352	352			112	112	112
	209	209	209			112	112	112
	172	172	172			111	111	111
	276	276	276			111	111	111
	290.01	290.01	290.01			558	558	558
	78	78	78					-386.2
	140.04	140.04	140.04		glass total area	2971.25	2687.52	2301.32
			-506.82					
glass total area	3638.75	3472.45	2965.63		glass % of façade	32.19%		
					% bird glass provided vs req'd			85.63%
glass % of façade	39.24%							
% bird glass provided vs req'd			85.40%					

KEYNOTES PER SHEET

Bird Glass Key:

Green outline indicates facade area

Blue outline indicates window area

Gray with no fill indicates bird glass

Magenta outline/fill indicates no bird glass

SHEET NOTES - EXTERIOR ELEVATIONS

1.	REFER TO BUILDING 200 AND 300 NARRATIVE FOR DETAILED EXPLANATION OF EXTERIOR MATERIALS
2.	PROVIDE CONTINUOUS SEALANT AND BACKER ROD AT ALL PRECAST CONCRETE JOINTS.
3.	ALL INSIDE AND OUTSIDE CORNERS OF PRECAST TRIM TO NOT BE MITERED.
4.	EXTERIOR SIGNAGE ON BUILDING TO BE COORDINATED AND VERIFIED WITH ARCHITECT, OWNER AND SIGNAGE VENDOR.

EXTERIOR MATERIALS

BC-1	MASONRY BRICK
BC-2	MASONRY BRICK
BC-3	MASONRY BRICK
BC-4	MASONRY BRICK
BC-5	MASONRY BRICK
BC-6	MASONRY BRICK
BC-7	MASONRY BRICK
C-1	BOARD FORMED CONCRETE
MC-1	CORRUGATED METAL
MC-2	CORRUGATED METAL
MP-1	METAL PANEL
MP-2	METAL PANEL
MP-3	METAL PANEL
MS-1	METAL PANEL SCREEN
S-1	STONE
S-2	STONE
S-3	STONE
E1	ALUMINUM PARAPET FLASHING
E2	METAL PIPE HANDRAIL
E3	PARAPET-MOUNTED METAL PIPE HANDRAIL
E4	PERFORATED METAL SIGN BAND
E5	STEEL OVERHEAD DOOR
E6	METAL FINS (2X7) PROJECTING FROM METAL FAÇADE. MATERIAL, FINISH TO MATCH FAÇADE PANELS
E7	AWNINGS, MASONRY PAINTED BY TENANT
E8	MURAL GRAPHICS BY DEVELOPER

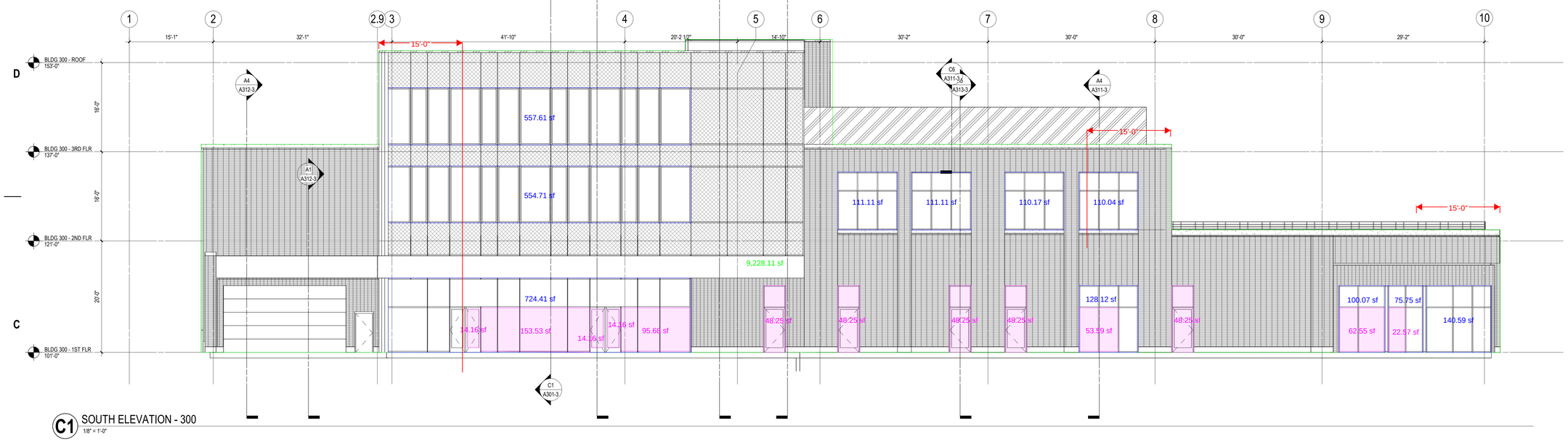

C1 SOUTH ELEVATION - 300
1/8" = 1'-0"

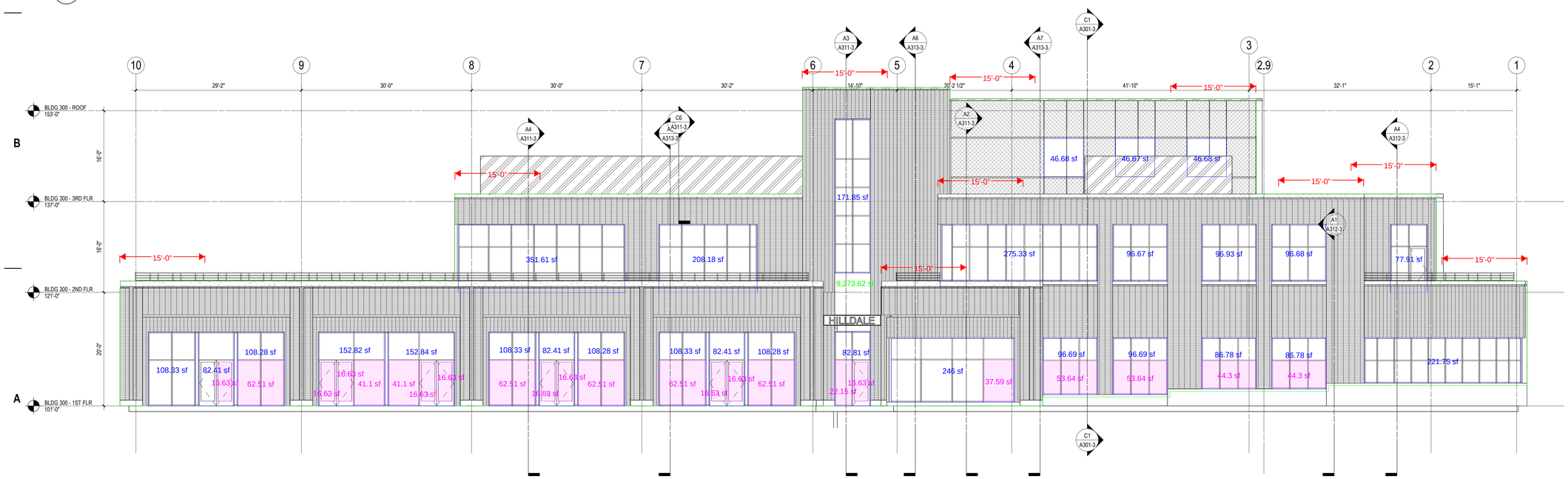

A1 NORTH ELEVATION - 300
1/8" = 1'-0"

eutaa
milwaukee | madison | green bay | denver | atlanta

PROJECT INFORMATION

Hilldale - Phase 3 - Buildings 200 and 300

702 N. Midvale Blvd.
Madison, WI 53705

ISSUANCE AND REVISIONS

DATE	DESCRIPTION
03/13/2023	CITY SUBMITTAL

KEY PLAN

SHEET INFORMATION

PROGRESS DOCUMENTS NOT FOR CONSTRUCTION

These documents reflect progress and intent and may be subject to change, including additional detail. These are not final construction documents and shall not be used for final bidding or construction-related purposes.

PROJECT MANAGER	JP
PROJECT NUMBER	719494-01

EXTERIOR ELEVATIONS - 300

A203-3

© 2022 Eppstein Uhen Architects, Inc.

BIRD GLASS NOT REQUIRED

BIRD GLASS REQUIRED FOR WINDOWS AND DOORS OVER 50 S.F.

BIRD GLASS REQUIRED FOR WINDOWS AND DOORS WITHIN 15FT OF BOTH SIDES OF AN OUTSIDE CORNER, REGARDLESS OF SIZE

BIRD GLASS IS NOT REQUIRED PER 85% COVERAGE CRITERIA



C3 NORTH - WEST
1/8" = 1'-0"

North										
Overall	CT01	Terrace door, balcony	CB01	CB02	CB03	Retail A, door	Retail B, lobby	Retail C	Retail D	Retail E	
	13.22	38.82	28.33	48.14	44.36	60.23	108.85	170.61	60.23	108.85	glass opening area sf
	1.00	1.00	5.00	2.00	0.00	0.00	0.00	0.00	0.00	0.00	opening over 60'
	14.00	9.00	9.00	8.00	0.00	2.00	1.00	1.00	3.00	1.00	bird glass criteria
	10.00	10.00	31.00	0.00	20.00	0.00	0.00	0.00	0.00	0.00	No bird glass
4,439.81	330.50	776.40	1,274.85	481.40	887.20	120.46	108.85	170.61	180.69	108.85	subtotal sf all glass
1,864.01	185.08	349.38	254.97	385.12	0.00	120.46	108.85	170.61	180.69	108.85	subtotal sf of bird glass criteria
2,575.80	145.42	427.02	1,019.88	96.28	887.20	0.00	0.00	0.00	0.00	0.00	subtotal sf of no bird glass
21,796.22											total wall area
20.37%											ratio of all windows to all wall
41.98%											% of glass that meets criteria of bird glass
1,584.51	185.08	349.38	254.97	385.12	0.00	90.60	41.18	170.61	66.39	41.18	bird glass provided
must be >85%	85.01%										% of bird glass provided

SHEET NOTES - EXTERIOR ELEVATIONS

1.	SEE SHEET A220-A222 FOR EXTERIOR FRAME TYPES AND DIMENSIONS.
2.	ALL OUTSIDE CORNERS OF MASONRY TO BE BULLNOSED INCLUDING OPENING JAMBS.
3.	EXTERIOR SIGNAGE ON BUILDING TO BE COORDINATED AND VERIFIED WITH ARCHITECT, OWNER AND SIGNAGE VENDOR.
4.	ALL VERTICAL INSIDE CORNERS TO HAVE 1/2" MOVEMENT JOINT.
5.	MJ = INDICATES MOVEMENT JOINT - 1/2" GAP.
6.	PJ = INDICATES METAL PANEL JOINT - 1/2" GAP.

KEYNOTES PER SHEET

B-4	GLEN-GERY MINK GREY SMOOTH IRONSPOT (TBD), MODULAR BRICK, STACK BOND
B-5	GLEN-GERY MINK GREY SMOOTH IRONSPOT (TBD), MODULAR BRICK, SOLDIER BOND
B-6	GLEN-GERY MINK GREY SMOOTH IRONSPOT (TBD), MODULAR BRICK, STACK BOND
B-7	GLEN-GERY MINK GREY SMOOTH IRONSPOT (TBD), MODULAR BRICK, SOLDIER BOND
MP-2	ZINC COMPOSITE PANEL, CHARCOAL FV5290
MS-1	EXPANDED METAL MESH PRIVACY SCREEN

EXTERIOR MATERIAL KEY

- GLEN-GERY MINK GREY SMOOTH IRONSPOT (TBD), MODULAR BRICK, STACK BOND
- GLEN-GERY MINK GREY SMOOTH IRONSPOT (TBD), MODULAR BRICK, SOLDIER BOND
- GLEN-GERY MINK GREY SMOOTH IRONSPOT (TBD), MODULAR BRICK, STACK BOND
- GLEN-GERY MINK GREY SMOOTH IRONSPOT (TBD), MODULAR BRICK, SOLDIER BOND
- ZINC COMPOSITE PANEL, CHARCOAL FV5290
- EXPANDED METAL MESH PRIVACY SCREEN

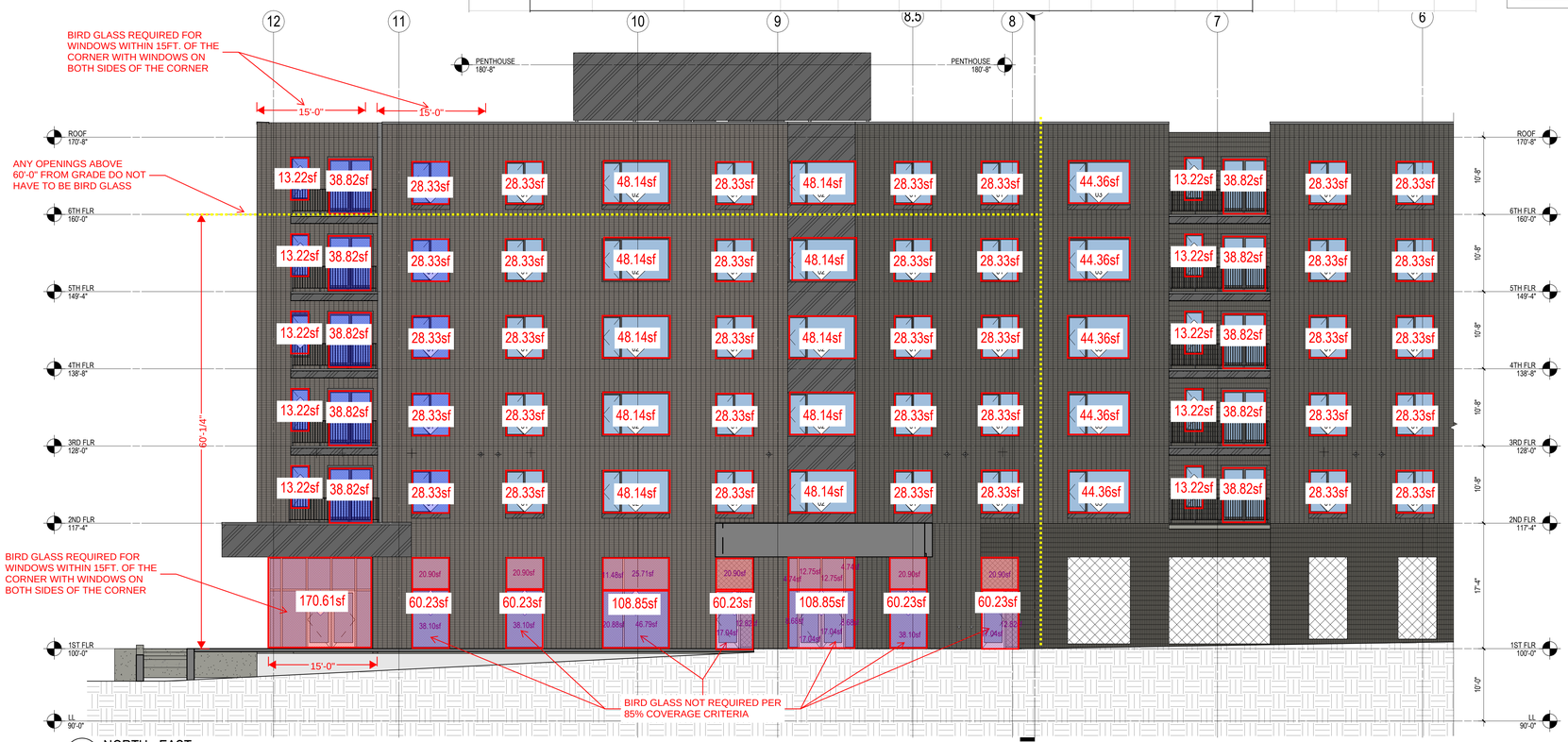

B2 NORTH - EAST
1/8" = 1'-0"

milwaukee | madison | green bay | denver | atlanta

PROJECT INFORMATION

HILLDALE PHASE 3 - RESIDENTIAL

401 N SEGOE RD
MADISON, WI 53705

ISSUANCE AND REVISIONS

DATE	DESCRIPTION
03/08/2023	CITY SUBMITTAL

KEY PLAN

SHEET INFORMATION

PROGRESS DOCUMENTS NOT FOR CONSTRUCTION

These documents reflect progress and intent and may be subject to change, including additional detail. These are not final construction documents and shall not be used for final bidding or construction-related purposes.

PROJECT MANAGER	JP
PROJECT NUMBER	719494-01

EXTERIOR ELEVATION - NORTH

A200

© 2023 Eppstein Uhen Architects, Inc.

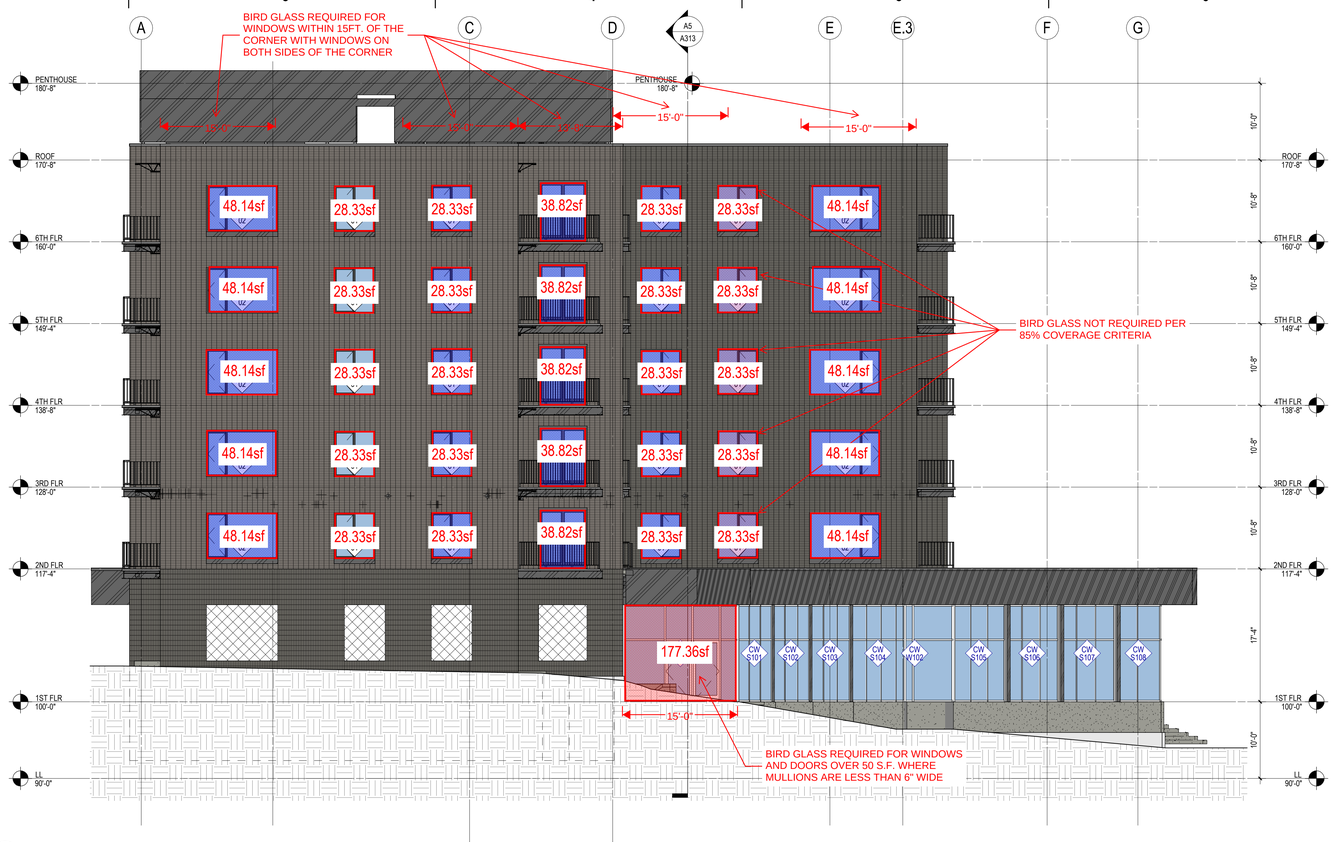

C3 WEST
1/8" = 1'-0"

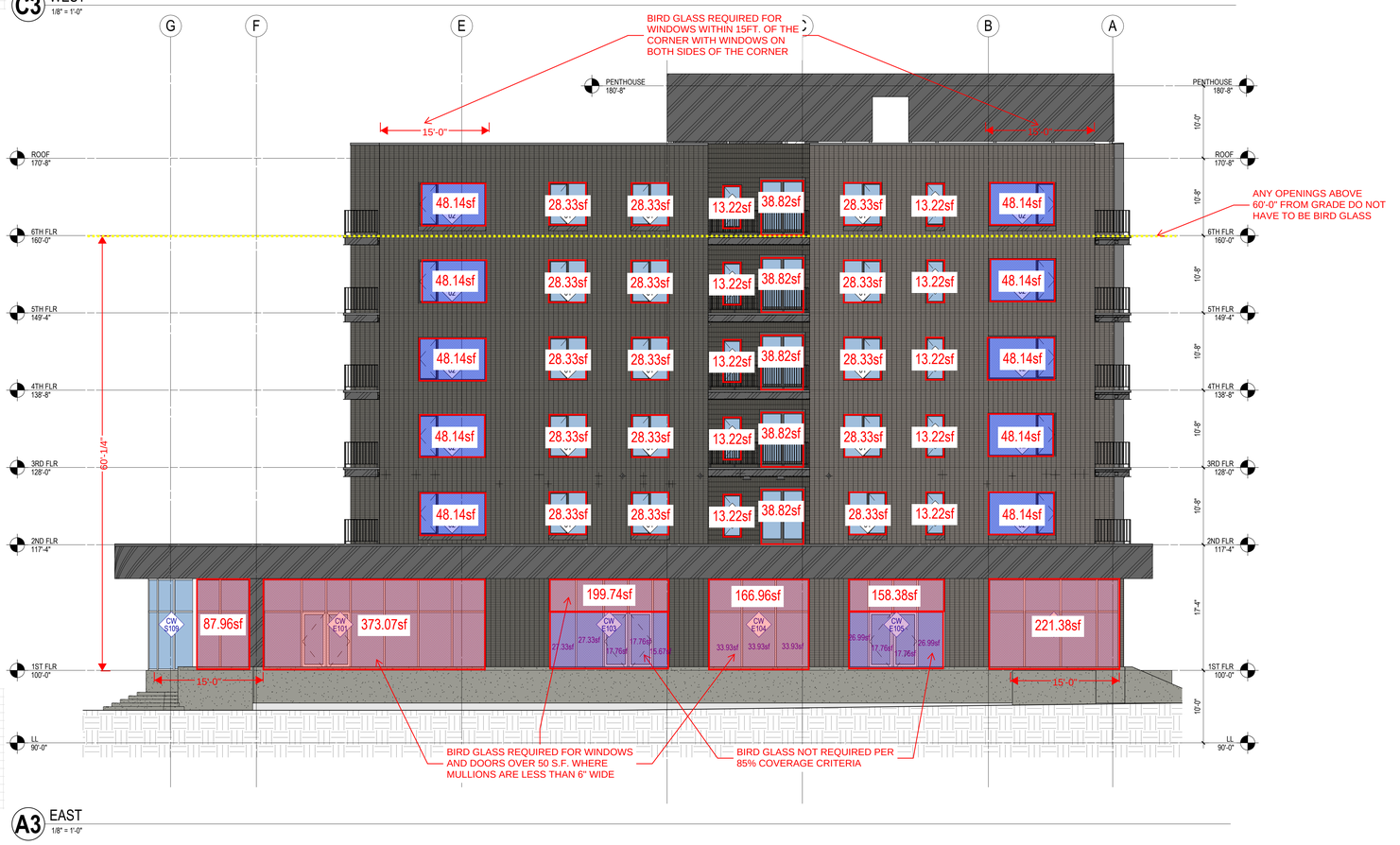

A3 EAST
1/8" = 1'-0"

West

	Overall	CT01	Terrace door, balcony	CB01	CB02	CB03	Retail K	
		13.22	38.82	28.33	48.14	44.36	87.96	177.36
		0.00	0.00	0.00	0.00	0.00	0.00	0.00
		0.00	5.00	15.00	10.00	0.00	1.00	1.00
		0.00	0.00	5.00	0.00	0.00	0.00	0.00
	1,419.46	0.00	194.10	566.60	481.40	0.00	177.36	
	1,277.81	0.00	194.10	424.95	481.40	0.00	177.36	
	141.65	0.00	0.00	141.65	0.00	0.00	0.00	
	7,108.44							
	19.97%							
	90.02%							
	1,138.16	0.00	194.10	283.30	481.40	0.00	177.36	
must be >85%	88.91%							

glass opening area of
opening over 60'
bird glass criteria
No bird glass
subtotal of all glass
subtotal of of bird glass criteria
subtotal of of no bird glass
total wall area
ratio of all windows to all wall
% of glass that meets criteria of bird glass
bird glass provided
% of bird glass provided

East

	Overall	CT01	Terrace door, balcony	CB01	CB02	CB03	Retail K	Retail L	Retail M	Retail N	Retail O	Retail P
		13.22	38.82	28.33	48.14	44.36	87.96	373.07	199.74	166.96	158.38	221.38
		2.00	1.00	0.00	2.00	0.00	0.00	0.00	0.00	0.00	0.00	0.00
		0.00	0.00	0.00	8.00	0.00	1.00	1.00	1.00	1.00	1.00	1.00
		8.00	4.00	12.00	0.00	0.00	0.00	0.00	0.00	0.00	0.00	0.00
	2,440.14	132.20	194.10	424.95	481.40	0.00	87.96	373.07	199.74	166.96	158.38	221.38
	1,592.61	0.00	0.00	0.00	385.12	0.00	87.96	373.07	199.74	166.96	158.38	221.38
	601.00	105.76	155.28	339.96	0.00	0.00	0.00	0.00	0.00	0.00	0.00	0.00
	8,212.68											
	29.71%											
	65.27%											
	1,365.62	0.00	0.00	0.00	385.12	0.00	87.96	373.07	93.88	166.96	97.84	221.38
must be >85%	87.02%											

glass opening area of
opening over 60'
bird glass criteria
No bird glass
subtotal of all glass
subtotal of of bird glass criteria
subtotal of of no bird glass
total wall area
ratio of all windows to all wall
% of glass that meets criteria of bird glass
bird glass provided
% of bird glass provided

SHEET NOTES - EXTERIOR ELEVATIONS

1. SEE SHEET A220-A222 FOR EXTERIOR FRAME TYPES AND DIMENSIONS.
2. ALL OUTSIDE CORNERS OF MASONRY TO BE BULLNOSED INCLUDING OPENING JAMBS.
3. EXTERIOR SIGNAGE ON BUILDING TO BE COORDINATED AND VERIFIED WITH ARCHITECT, OWNER AND SIGNAGE VENDOR.
4. ALL VERTICAL INSIDE CORNERS TO HAVE 1/2" MOVEMENT JOINT.
5. MJ = INDICATES MOVEMENT JOINT - 1/2" GAP.
6. PJ = INDICATES METAL PANEL JOINT - 1/2" GAP.

KEYNOTES PER SHEET

eula

milwaukee | madison | green bay | denver | atlanta

PROJECT INFORMATION

HILLDALE PHASE 3 - RESIDENTIAL

401 N SEGOE RD
MADISON, WI 53705

ISSUANCE AND REVISIONS

DATE	DESCRIPTION
10/18/2022	SCHEMATIC DESIGN REVISIONS
03/08/2023	CITY SUBMITTAL

KEY PLAN

SHEET INFORMATION

PROGRESS DOCUMENTS NOT FOR CONSTRUCTION

These documents reflect progress and intent and may be subject to change, including additional detail. These are not final construction documents and shall not be used for final bidding or construction-related purposes.

PROJECT MANAGER JP

PROJECT NUMBER 719494-01

EXTERIOR ELEVATION - EAST & WEST

A201

© 2023 Eppstein Uhen Architects, Inc.

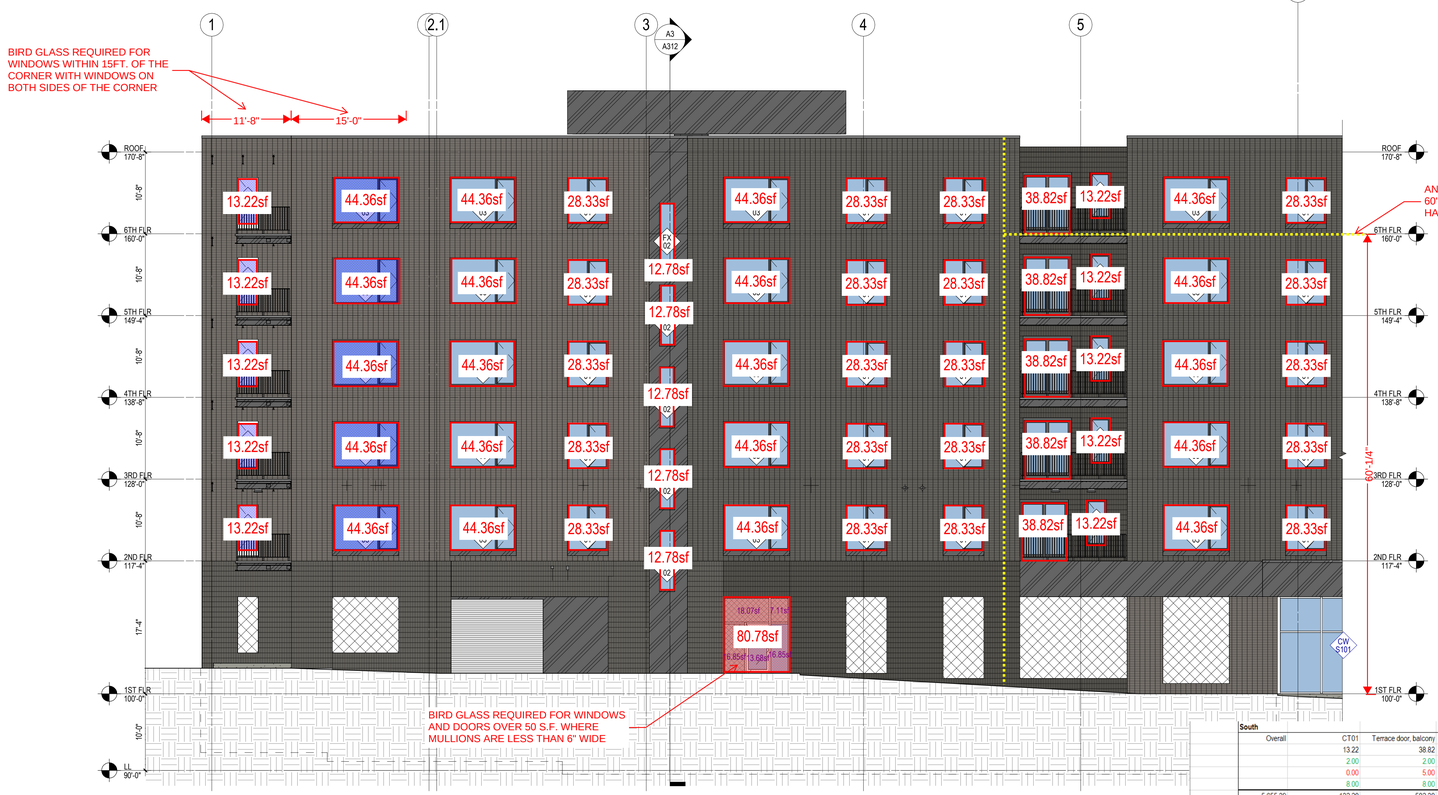

C3 SOUTH - WEST
1/8" = 1'-0"

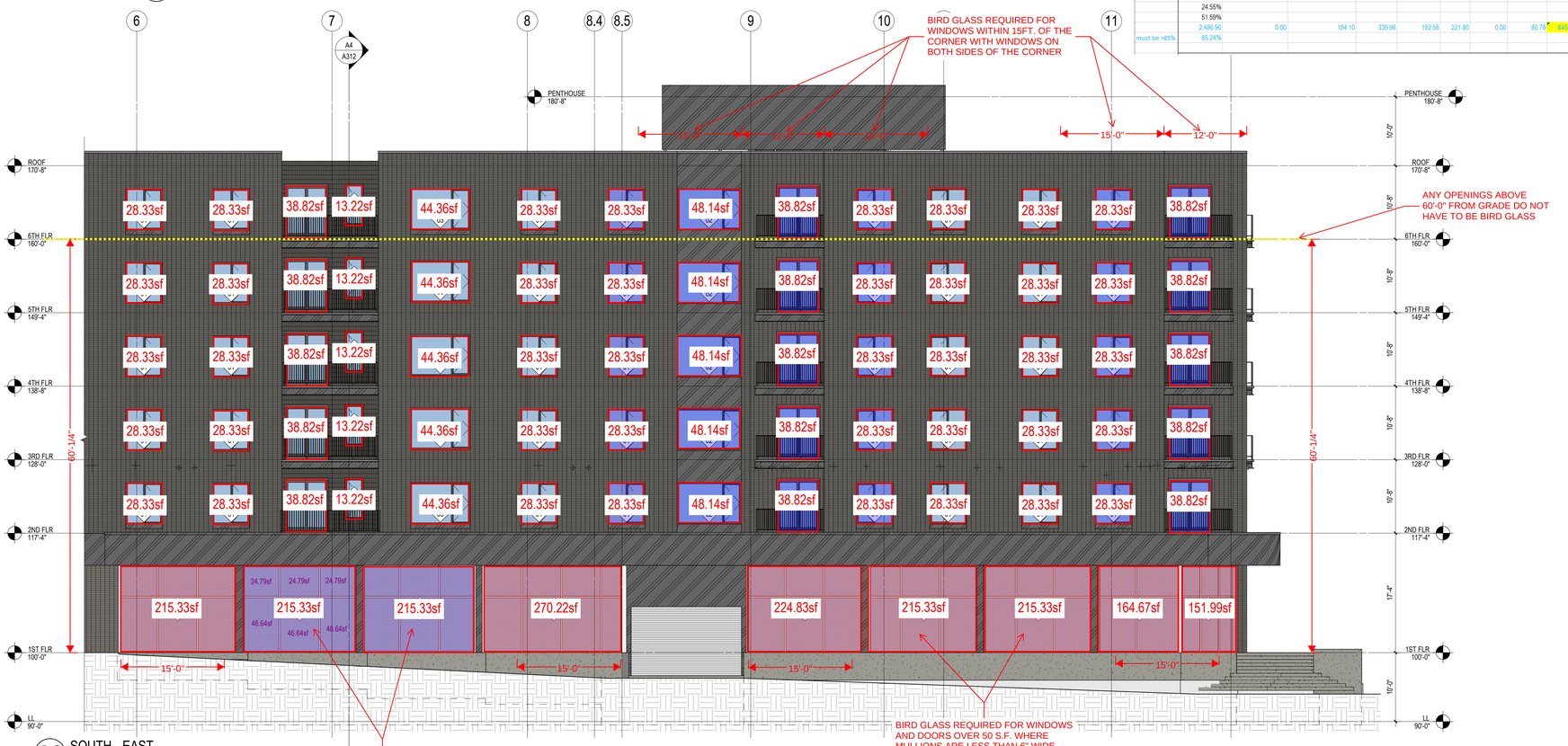

A2 SOUTH - EAST
1/8" = 1'-0"

SHEET NOTES - EXTERIOR ELEVATIONS

1.	SEE SHEET A220-A222 FOR EXTERIOR FRAME TYPES AND DIMENSIONS.
2.	ALL OUTSIDE CORNERS OF MASONRY TO BE BULLNOSED INCLUDING OPENING JAMBS.
3.	EXTERIOR SIGNAGE ON BUILDING TO BE COORDINATED AND VERIFIED WITH ARCHITECT, OWNER AND SIGNAGE VENDOR.
4.	ALL VERTICAL INSIDE CORNERS TO HAVE 1/2" MOVEMENT JOINT.
5.	MJ = INDICATES MOVEMENT JOINT - 1/2" GAP.
6.	PJ = INDICATES METAL PANEL JOINT - 1/2" GAP.

KEYNOTES PER SHEET

South

Overall	CT01	Terrace door, balcony	CB01	CB02	CB03	FX02	Retail D	Retail E	Retail F	Retail G	Retail H	Retail J	
	13.22	38.82	28.33	48.14	44.36	12.78	80.78	215.33	270.22	224.83	164.67	151.99	glass opening area sf
	2.00	2.00	8.00	1.00	2.00	0.00	0.00	0.00	0.00	0.00	0.00	0.00	opening over 60'
	0.00	5.00	12.00	4.00	5.00	0.00	1.00	5.00	1.00	1.00	1.00	1.00	bird glass criteria
	8.00	8.00	35.00	0.00	18.00	5.00	0.00	0.00	0.00	0.00	0.00	0.00	No bird glass
5,655.39	132.20	582.30	1,558.15	240.70	1,109.00	63.90	80.78	1,076.65	270.22	224.83	164.67	151.99	subtotal sf all glass
2,917.56	0.00	194.10	339.96	192.56	221.80	0.00	80.78	1,076.65	270.22	224.83	164.67	151.99	subtotal sf of bird glass criteria
2,270.25	105.76	310.56	991.55	0.00	798.48	63.90	0.00	0.00	0.00	0.00	0.00	0.00	subtotal sf of no bird glass
23,036.00													total wall area
24.55%													ratio of all windows to all wall
51.59%													% of glass that meets criteria of bird glass
2,486.90	0.00	194.10	339.96	192.56	221.80	0.00	80.78	845.09	270.22	224.83	164.67	151.99	bird glass provided
must be >85%	85.24%												% of bird glass provided

milwaukee | madison | green bay | denver | atlanta

PROJECT INFORMATION

HILLDALE PHASE 3 - RESIDENTIAL

401 N SEGOE RD
MADISON, WI 53705

ISSUANCE AND REVISIONS

DATE	DESCRIPTION
03/08/2023	CITY SUBMITTAL

KEY PLAN

SHEET INFORMATION

PROGRESS DOCUMENTS NOT FOR CONSTRUCTION

These documents reflect progress and intent and may be subject to change, including additional detail. These are not final construction documents and shall not be used for final bidding or construction-related purposes.

PROJECT MANAGER	JP
PROJECT NUMBER	719494-01

EXTERIOR ELEVATION - SOUTH

A202

© 2023 Eppstein Uhen Architects, Inc.

GENERAL NOTES

1. THE WORK SHALL BE PERFORMED IN ACCORDANCE WITH APPLICABLE CODE REQUIREMENTS, AND APPLICABLE REQUIREMENTS OF OTHER REGULATORY AGENCIES.

2. CONTRACTOR IS RESPONSIBLE FOR DETERMINING IF ANY CONFLICT EXISTS. THESE DRAWINGS DO NOT RELIEVE CONTRACTOR OF ITS DUTY TO FULLY COMPLETE AND COMPLY INCLUDING, AND WITHOUT LIMITATION, THE NEED TO CHECK, CONFIRM AND COORDINATE ALL DIMENSIONS AND DETAILS, TAKE FIELD MEASUREMENTS, VERIFY FIELD CONDITIONS AND COORDINATE WORK WITH THAT OF OTHER CONTRACTORS FOR THE PROJECT. THE CONTRACTOR IS RESPONSIBLE FOR OBTAINING ALL NECESSARY PERMITS AND OTHER RELATED ITEMS PRIOR TO THE START OF CONSTRUCTION OF THIS PROJECT.

3. THE CONTRACTOR SHALL BE SOLELY RESPONSIBLE FOR COMPLYING WITH ALL FEDERAL, STATE AND LOCAL SAFETY REQUIREMENTS, TOGETHER WITH EXERCISING PRECAUTIONS AT ALL TIMES FOR THE PROTECTION OF PERSONS (INCLUDING EMPLOYEES) AND PROPERTY. IT IS ALSO THE SOLE RESPONSIBILITY OF THE CONTRACTOR AND SUBCONTRACTOR TO INITIATE, MAINTAIN AND SUPERVISE ALL SAFETY REQUIREMENTS, PRECAUTIONS AND PROGRAMS IN CONNECTION WITH THE WORK.

4. IMPROVEMENTS OCCUR ON AN EXISTING SITE. OWNER TO PROVIDE ALL NECESSARY ADDITIONAL DRAWINGS AND INFORMATION TO CONTRACTOR FOR REFERENCE. EXISTING UNDERGROUND UTILITIES AND IMPROVEMENTS ARE EXISTING. THE LOCATIONS HAVE NOT BEEN VERIFIED IN THE FIELD AND NO GUARANTEE IS MADE AS TO THE ACCURACY AND COMPLETENESS OF THE INFORMATION SHOWN. THE EXACT LOCATION AND ELEVATION OF UTILITIES SHALL BE DETERMINED BY THE CONTRACTOR.

5. THE INTENT OF THE DRAWINGS AND SPECIFICATIONS IS TO CONSTRUCT THE WORK INDICATED ON THE LANDSCAPE DRAWINGS IN ACCORDANCE WITH THE WISONSIN BUILDING CODE.

6. REPORT DISCREPANCIES IN DRAWINGS OR SPECIFICATIONS TO THE LANDSCAPE ARCHITECT FOR CLARIFICATIONS AND ADJUSTMENTS BEFORE COMMENCING WORK. ANY DEVIATIONS OR CHANGES IN THESE DRAWINGS WITHOUT WRITTEN ACCEPTANCE OF THE LANDSCAPE ARCHITECT SHALL ABSOLVE THE LANDSCAPE ARCHITECT OF ANY AND ALL RESPONSIBILITY OF SAID DEVIATION AND CHANGE.

7. IF LIVE UTILITIES ARE ENCOUNTERED, NOT INDICATED PREVIOUSLY, PROTECT THE SAME FROM DAMAGE AND IMMEDIATELY NOTIFY THE OWNER AND THE AFFECTED UTILITY PROVIDER. DO NOT PROCEED UNTIL FURTHER INSTRUCTIONS ARE RECEIVED.

8. BACKFILL UTILITY LINES EXPOSED BY WORK OPERATIONS AND REPAIR BEDDING AND BACKFILL MATERIAL OF UTILITIES THAT IS DISPLACED AND DAMAGED DURING WORK. REPLACE CONTAMINATED MATERIALS WITH NEW MATERIALS MATCHING THE EXISTING MATERIALS.

9. DIMENSIONS INDICATED ON PLANS ARE FOR HORIZONTAL CONTROL ARE ACCURATE IF MEASURED ON A LEVEL LINE. MEASURE HORIZONTAL CONTROL DIMENSIONS ON A LEVEL LINE, NOT PARALLEL WITH GROUND SLOPE.

10. REFER TO ELECTRICAL DRAWINGS FOR SITE LIGHTING CIRCUITRY, AND REFER TO THE SPECIFICATIONS FOR THE LIGHT FIXTURE SCHEDULE.

11. PROTECT EXISTING STRUCTURES AND ELEMENTS TO REMAIN INCLUDING BUT NOT LIMITED TO: UTILITIES, PAVEMENT, FENCES, COLUMNS, ETC.

12. WRITTEN DIMENSIONS TAKE PRECEDENCE OVER SCALED DIMENSIONS.

13. OBTAIN ALL NECESSARY PERMITS PRIOR TO DEMOLITION.

14. REMOVE ALL DEBRIS ASSOCIATED WITH THIS DEMOLITION. IN NO INSTANCE SHALL MATERIAL BE BURIED ON THE SITE. DISPOSE ALL ITEMS REMOVED OFF-SITE IN ACCORDANCE WITH FEDERAL, STATE, AND LOCAL CODES.

15. RESTORE ADJACENT PROPERTIES OR STRUCTURES THAT MAY BECOME DAMAGED AS A RESULT OF DEMOLITION CONSTRUCTION ACTIVITIES AT NO ADDITIONAL COST TO THE PROJECT.

16. PROTECT ALL EXISTING SITE FEATURES TO REMAIN. REPAIR ANY DAMAGES TO THE SATISFACTION OF THE PROPERTY OWNER AT NO ADDITIONAL COST TO THE PROJECT.

17. IF A UTILITY SHUT-DOWN IS REQUIRED, NOTIFY THE UTILITY OWNER AND ALL AFFECTED PARTIES IN WRITING 2 WEEKS PRIOR TO BEGINNING WORK. OBTAIN APPROVAL FROM UTILITY OWNER PRIOR TO SHUT-DOWN.

18. THE CONTRACTOR IS RESPONSIBLE FOR CONSTRUCTION FENCING, CONSTRUCTION TRAFFIC AND MAINTENANCE OF VEHICULAR AND PEDESTRIAN TRAFFIC AROUND THE PROJECT SITE. THE CONTRACTOR IS RESPONSIBLE TO PROVIDE LIGHTS, SIGNS, BARRICADES, AND OTHER DEVICES TO WARN AND PHYSICALLY SEPARATE THE PEDESTRIANS AND VEHICULAR TRAFFIC FROM THE HAZARDS OF THE CONSTRUCTION AND DEMOLITION OPERATIONS. THE CONTRACTOR SHALL BE RESPONSIBLE FOR THE PROTECTION AND SAFE MOVEMENT OF PEDESTRIANS THROUGH, AROUND, OR DETOURED AWAY FROM THE CONSTRUCTION SITE. THE CONTRACTOR SHALL PROTECT PEDESTRIAN AND VEHICULAR TRAFFIC FROM CONSTRUCTION TRAFFIC AT ALL TIMES DURING THE PROJECT.

19. SET STRAIGHT LINE GRADES BETWEEN ELEVATIONS UNLESS OTHERWISE SHOWN.

20. COORDINATE PENETRATIONS REQUIRED FOR IRRIGATION AND SUBDRAINAGE AND ELECTRICAL WORK WITH CONCRETE WORK.

21. REFER TO CIVIL DRAWINGS FOR SANITARY SEWER LINES AND STORM DRAIN LINES AND OTHER UTILITY LINES.

@	AT	FG	FINISH GRADE	SA	STABILIZED AGGREGATE PAVING
AD	AREA DRAIN	FH	FIRE HYDRANT	SAD	SEE ARCHITECTURAL DRAWINGS
AG	AGGREGATE PAVING	FL	FLOW LINE	SCD	SEE CIVIL DRAWINGS
AM	AGGREGATE MULCH	FOC	FACE OF CURB	SD	SLOT DRAIN
AP	ASPHALT PAVEMENT	FOW	FACE OF WALL	SED	SEE ELECTRICAL DRAWINGS
B&B	BALL AND BURLAP	FS	FINISH SURFACE	SGB	SUBGRADE GRADE BREAK
BC	BOTTOM OF CURB	GALV	GALVANIZED	SGS	SUBGRADE SUBSURFACE
BD	BOLLARD	GB	GRADE BREAK	SH	STEEL HEADER
BE	BUILDING ENTRY	GJ	GROUT JOINT	SIM	SIMILAR
BF	BOTTOM OF FENCE	HH	HANDHOLE	SJ	SCORE JOINT
BFP	BOTTOM OF FENCE POST	HORIZ	HORIZONTAL	SPD	SEE PLUMBING DRAWINGS
BLDG	BUILDING	HP	HIGH POINT	SS	STAINLESS STEEL
BOC	BACK OF CURB	HT	HEIGHT	SSD	SEE STRUCTURAL DRAWINGS
BN	BENCH	ID	INSIDE DIAMETER	STD	STANDARD
BP	BRICK PAVEMENT	IE	INVERT ELEVATION	TA	TOP OF ANGLE
BW	BOTTOM OF WALL	INV	INVERTED	TB	TOP OF BOLLARD
CAL	CALIPER	LH	LAYOUT LINE OF HEADER	T&B	TOP AND BOTTOM
CB	CATCH BASIN	LONGIT	LONGITUDINAL	TC	TOP OF CURB
CC	CONCRETE CURB	LOW	LIMIT OF WORK	TCJ	TOOLED CONTROL JOINT
CH	CONCRETE HEADER	LP	LOW POINT	TD	TRENCH DRAIN
CJ	CONTROL JOINT	LT	LIGHT POLE	TF	TOP OF FENCE
CL	CENTERLINE	M	MANHOLE	TFG	TOP OF FOOTING
CLR	CLEARANCE	MAX	MAXIMUM	TH	TOP OF HEADER
CO	CLEANOUT	ME	MATCH EXISTING	TIHP	TRENCH INVERT HIGH POINT
COL	COLUMN	MFR	MANUFACTURER	TIO	TRENCH INVERT OUTLET
COJ	CONSTRUCTION JOINT	MIN	MINIMUM	TOC	TRASH RECEPTACLE
CONC	CONCRETE	NIC	NOT IN CONTRACT	TP	TOP OF CONCRETE
CONT	CONTINUOUS	NTS	NOT TO SCALEON CENTER	TR	TOP OF PLINTH
CP	CONCRETE PAVEMENT	OC	ON CENTER EACH WAY	TS	TREE
CR	CURB RAMP	OCEW	OUTSIDE DIAMETER	TW	TOP OF STAIR
DIA	DIAMETER	OD	OVERFLOW PIPE	TRANS	TOP OF WALL
DM	DETENTION MANHOLE	OP	OPPOSITE	TRB	TRANSVERSE
DN	DOWN	OPP	PLANTING AREA	TS	TOP OF ROOT BALL
DWG	DRAWING	PA	POINT OF CURVATURE	TSP	TOP OF STEP
EA	EACH	PCPD	PLANTING DRAIN	TYP	TOP OF STEEL PLATE
EF	EACH FACE	PED	PEDESTRIAN	UDP	TYPICAL
EJ	EXPANSION JOINT	PERF	PERFORATED	VEH	UNDERGROUND DRAIN PIPE
EL	ELEVATION	POB	POINT OF BEGINNING	VERT	VEHICULAR
EL	ELEVATION	POC	POINT OF CONNECTION	WL	VERTICAL
EP	EDGE OF PAVEMENT	PT	POINT OF TANGENCY	WPM	WATER PROOF MEMBRANE
EQ	EQUAL	R	RADIUS	WWF	WELDED WIRE FABRIC
EW	EACH WAY	RB	ROOT BARRIER	W/	WITH
EX	EXISTING	RIM	RIM ELEVATION		
FCJ	FORMED CONTROL JOINT	ROW	RIGHT OF WAY		
FFE	FINISHED FLOOR ELEVATION	S	SLOPE		

GENERAL ANNOTATIONS

PROPERTY LINE	REFERENCE TO DETAIL THAT APPLIES WHEN IMAGE IS TYPICAL (1 / L301, TYP)
LIMIT OF WORK LINE	REFERENCE TO DETAIL THAT APPLIES WHEN IMAGE IS SIMILAR TO THE DETAIL (1 / L301, SIM)
MATCHLINE	REFERENCE TO DETAIL THAT APPLIES WHEN IMAGE IS SWITCHED FROM LEFT TO RIGHT (1 / L301, INV)
CENTERLINE	ENLARGED PLAN AREA (1 / L301)
SECTION (SECTION NUMBER: 1 / A101, SIM; SHEET NUMBER)	ELEVATION (1 / L301)

ALIGN	ALIGN
1 : 1	SLOPE RATIO
BREAKLINE	BREAKLINE
0" - 1" / R 0" - 0 1/2"	DIMENSION

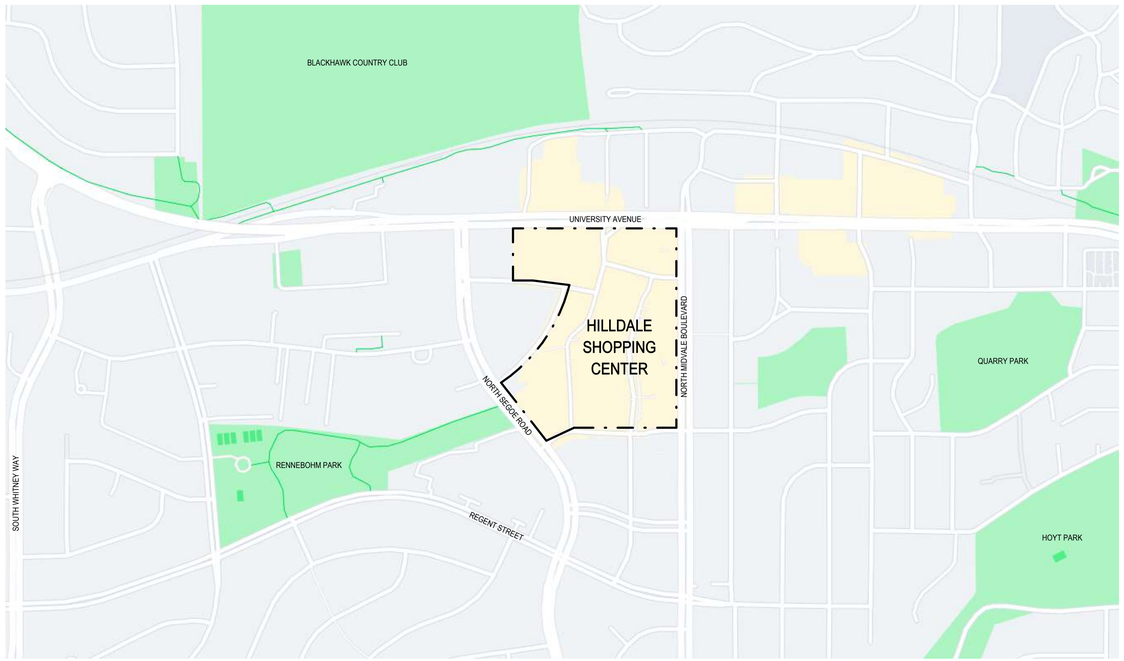

LOCATION MAP

LANDSCAPE SHEET INDEX

Sheet Number	Sheet Name
L001	LANDSCAPE DRAWING INDEX
L100	LANDSCAPE SITE PLAN - OVERALL
L111	LANDSCAPE SITE PLAN - ZONE 1
L112	LANDSCAPE SITE PLAN - ZONE 2
L113	LANDSCAPE SITE PLAN - ZONE 3
L114	LANDSCAPE SITE PLAN - ZONE 4
L115	LANDSCAPE SITE PLAN - ZONE 5
L116	LANDSCAPE SITE PLAN - ZONE 6 + 7
L117	LANDSCAPE SITE PLAN - ZONE 8
L118	LANDSCAPE SITE PLAN - ZONE 9
L170	LANDSCAPE PLAN - OVERALL
L171	LANDSCAPE PLAN - ZONE 1
L172	LANDSCAPE PLAN - ZONE 2
L173	LANDSCAPE PLAN - ZONE 3
L174	LANDSCAPE PLAN - ZONE 4
L175	LANDSCAPE PLAN - ZONE 5
L176	LANDSCAPE PLAN - ZONE 6 + 7
L177	LANDSCAPE PLAN - ZONE 8
L178	LANDSCAPE PLAN - ZONE 9
L179	LANDSCAPE PLAN - SUSPENDED PAVEMENT
L500	LANDSCAPE PAVEMENT DETAILS
L501	LANDSCAPE PAVEMENT DETAILS
L510	LANDSCAPE ELEMENTS DETAILS
L511	LANDSCAPE STONE DETAILS
L512	LANDSCAPE METAL FRAME DETAILS
L513	LANDSCAPE MISC METAL DETAILS
L514	LANDSCAPE STAIR DETAILS
L515	LANDSCAPE PRECAST ELEMENTS
L516	LANDSCAPE WALL DETAILS
L530	LANDSCAPE PLANTING DETAILS
L531	LANDSCAPE PLANTING DETAILS

REALM COLLABORATIVE
100 E BROAD STREET
SUITE 1710
COLUMBUS, OHIO 43215
PHONE 614.670.7390
www.REALMCOLLABORATIVE.com

PROJECT INFORMATION

WS Hilldale Phase 3

HILLDALE MADISON

702 N Midvale Blvd
Madison, WI 53705

ISSUANCE AND REVISIONS

DATE	DESCRIPTION
03/13/2023	CITY SUBMITTAL

KEY PLAN

SHEET INFORMATION

PROGRESS DOCUMENTS NOT FOR CONSTRUCTION

These documents reflect progress and intent and may be subject to change, including additional detail. These are not final construction documents and shall not be used for final bidding or construction-related purposes.

PROJECT MANAGER	REALM
PROJECT NUMBER	2021-03

LANDSCAPE DRAWING INDEX

L001

TO OBTAIN LOCATION OF PARTICIPATING UNDERGROUND FACILITIES BEFORE YOU DIG IN WISCONSIN
CALL DIGGERS HOTLINE
1-800-242-8511
TOLL FREE
WIS. STATUTE 182.0175 (1974) REQUIRES MIN. OF 3 WORK DAYS NOTICE BEFORE YOU EXCAVATE

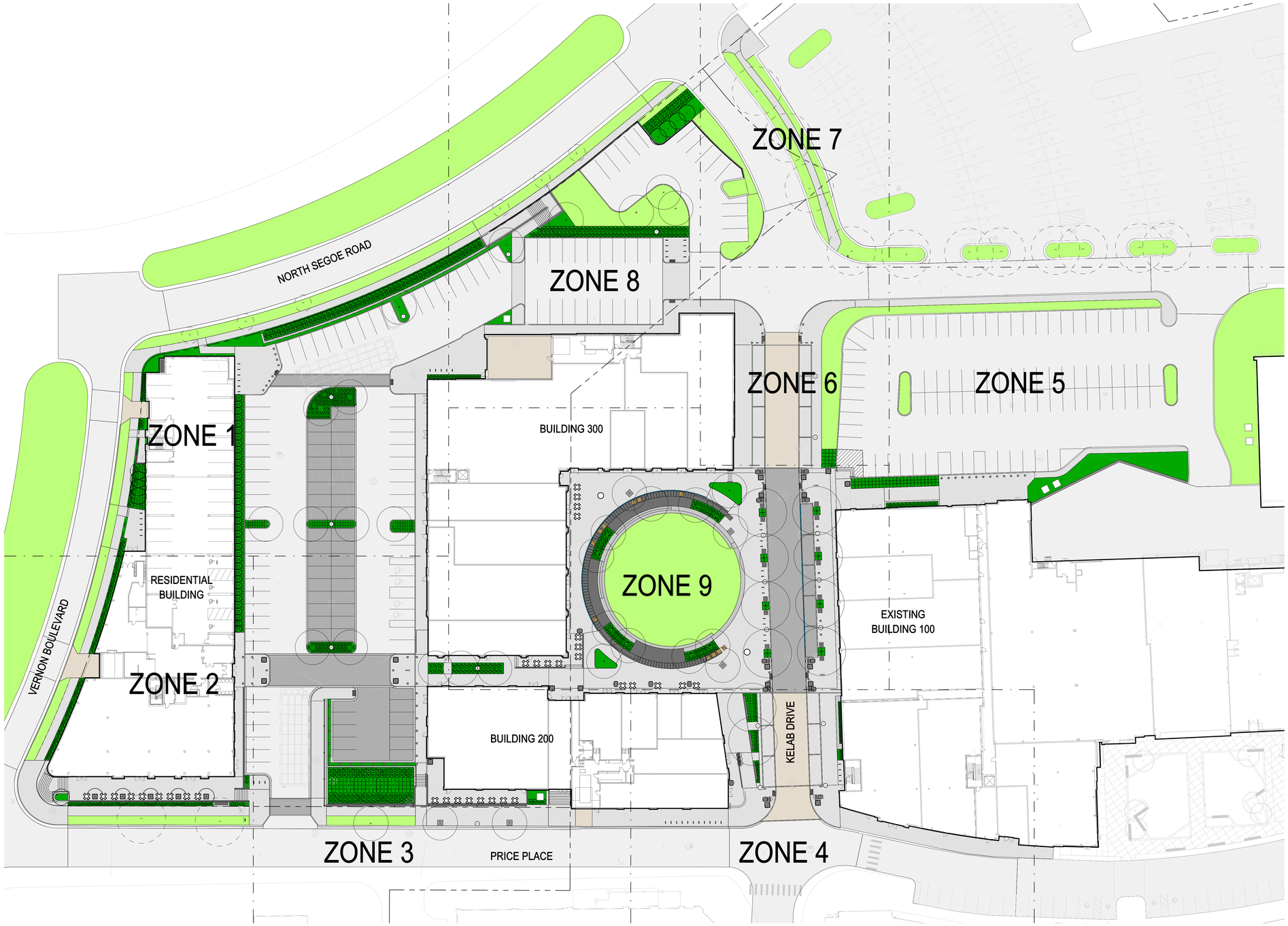

REALM
COLLABORATIVE

100 E BROAD STREET
SUITE 1710
COLUMBUS, OHIO 43215
PHONE 614.670.7390
www.REALMCOLLABORATIVE.com

PROJECT INFORMATION

WS Hilldale Phase 3

HILLDALE
MADISON

702 N Midvale Blvd
Madison, WI 53705

ISSUANCE AND REVISIONS

DATE	DESCRIPTION
03/13/2023	CITY SUBMITTAL

KEY PLAN

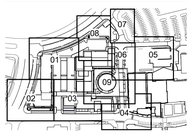

SHEET INFORMATION

PROGRESS DOCUMENTS NOT FOR CONSTRUCTION

These documents reflect progress and intent and may be subject to change, including additional detail. These are not final construction documents and shall not be used for final bidding or construction-related purposes.

PROJECT MANAGER	REALM
PROJECT NUMBER	2021-03

LANDSCAPE SITE PLAN - OVERALL

L100

SCALE: 1" = 30'-0"

0' 15' 30' 60'

TO OBTAIN LOCATION OF PARTICIPATING UNDERGROUND FACILITIES BEFORE YOU DIG IN WISCONSIN
CALL DIGGERS HOTLINE
1-800-242-8511
TOLL FREE
#65, STATUTE 182.0175, (1974) REQUIRES MIN. OF 3 WORK DAYS NOTICE BEFORE YOU EXCAVATE

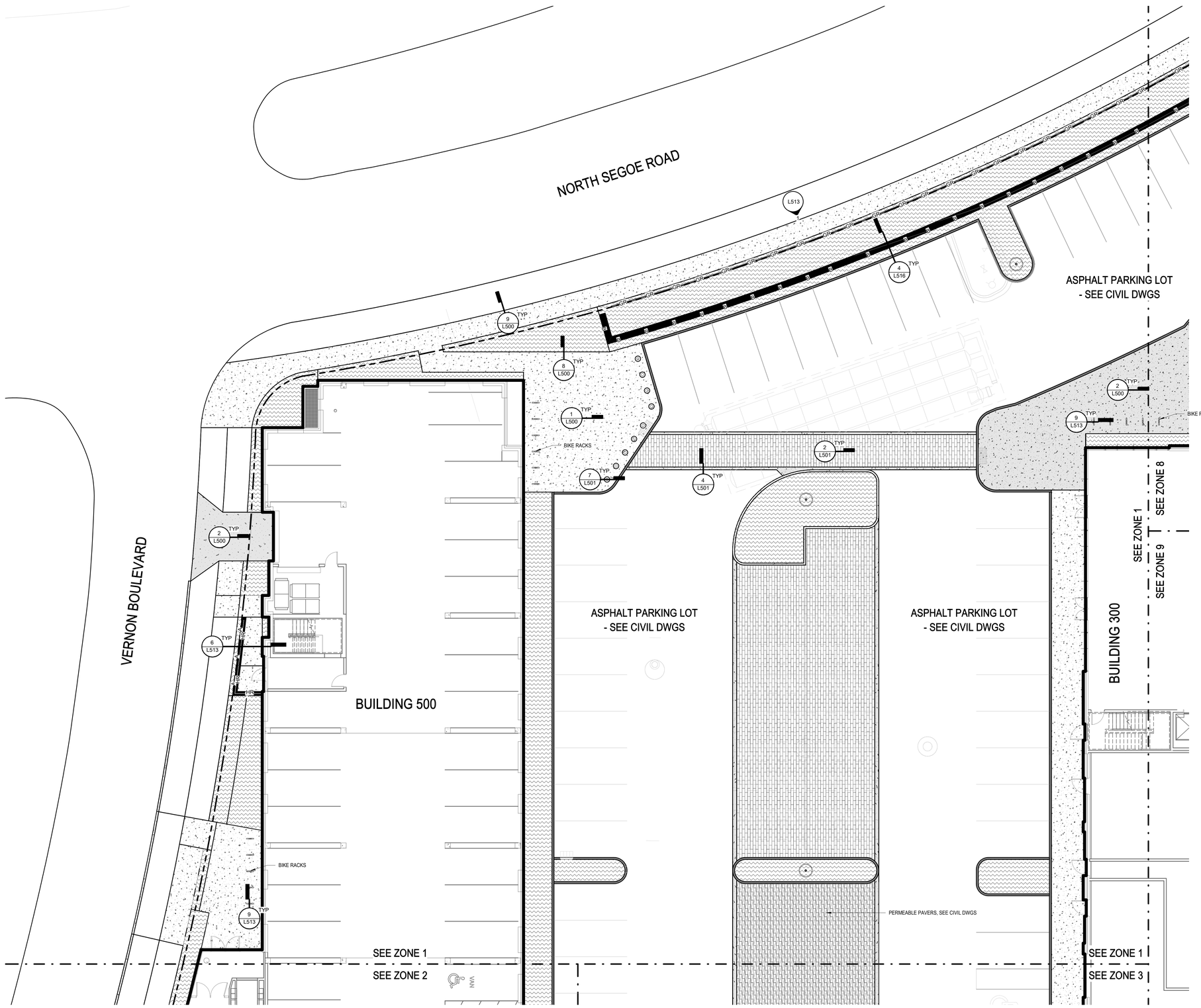

MULCH
- FINELY SHREDDED HARDWOOD MULCH
- DEPTH: 2" DEEP
- COLOR: NATURAL

PED VEH

CONCRETE PAVING
- PEDESTRIAN & VEHICLUAR AREAS
- LIGHT BROOM FINISH
- SAW CUT, DECORATIVE AND SEALED JOINTS
- COLOR: NATURAL

CONCRETE UNIT PAVING - TYPE 1 (NON-PERMEABLE)
- MFR: UNILOCK WWW.UNILOCK.COM
- PRODUCT: ECO-PROMENADE (11.75" X 3" X 3.875")
- COLOR: SERIES FINISH FROM MFR FULL RANGE
- NON-PERM BASE: CONCRETE SUBSLAB ON AGGREGATE BASE
- STABILIZED SAND JOINTS

CONCRETE UNIT PAVING - TYPE 2 (PERMEABLE)
- MFR: UNILOCK WWW.UNILOCK.COM
- PRODUCT: ECO-PROMENADE (11.75" X 3" X 3.875")
- COLOR: SERIES FINISH FROM MFR FULL RANGE
- PERMEABLE BASE: PER CIVIL
- SEE CIVIL DRAWINGS

GRANITE COBBLE
- PRODUCT: 4" X 4" X 4" GRANITE COBBLE
- COLOR: GREY RANGE
- BASE: SAND SETTING BED ON CONCRETE SUBSLAB
- STABILIZED SAND JOINTS

LIMESTONE SLABS
- PRODUCT: SIZE PER PLAN X 3" LIMESTONE SLAB
- COLOR: GREY RANGE
- BASE: SAND SETTING BED ON CONCRETE SUBSLAB
- STABILIZED SAND JOINTS

LIMESTONE PLINTHS
- PER PLAN X 18" HT LIMESTONE
- COLOR: GREY RANGE

WOOD BLOCK SETAING
- PER PLAN X 18" HT

PRECAST STEPS / SEATWALLS
- MFR: WAUSAU TILE WWW.WAUSAUTILE.COM
- PRODUCT: CUSTOM PRECAST
- COLOR: MFR FULL COLOR RANGE

ARTIFICIAL TURF
- MFR: XGRASS WWW.XGRASS.COM
- PRODUCT: PREMIER NATURAL
- FILL: ENVIROFILL; BASE: TILE PAVER

HR HR HR

HANDRAILING
- POWDER COATED STEEL, BLACK
- FLAT BAR STEEL (2" X 1/2")

GR GR GR

GUARDRAILING
- POWDER COATED STEEL, BLACK
- HORIZONTAL FLAT BAR STEEL (2" X 1/2")

A A A

WALL - TYPE A
- CIP CONCRETE RETAINING WALL W/ REINFORCEMENT
- SMOOTH FORM LINER FINISH

B B B

WALL - TYPE B
- RIB ROCK LANDSCAPE BLOCK SEGMENTAL WALL
- COLOR: FROM MFR FULL RANGE, ROUGH TEXTURE

C C C

WALL TYPE C
- 3/8" BENT PLATE STEEL PLANTER EDGE
- ATTACHED TO CONCRETE FOOTER

F F F

HILLDALE FRAME
- STEEL FRAME STRUCTURE

S S S

SLOT DRAIN
- MFR: DURATRENCH
- PRODUCT: SS RADIUS SLOT DRAIN

TD TD TD

TRENCH DRAIN
- MFR: ACO DRAIN
- PRODUCT: K50/ KS50 2"

STAIRS
- CIP CONCRETE

PLANTERS
- VARIOUS SIZES, BY OWNER

TREE GRATE
- MFR: URBAN ACCESSORIES
- PRODUCT: JAMISON 2000
- COLOR: BRUSHED ALUMINUM

LIGHTING
- POLE LEVEL LIGHTING
- SEE ELECTRICAL DRAWINGS

NON-LIGHT LIGHT

BOLLARD
- MFR: FORMS AND SURFACES WWW.FORMS-SURFACES.COM
- PRODUCT: HELIO SERIES 600
- MATERIAL: STAINLESS STEEL

BIKE RACK
- MFR: SPRUCE AND GANDER WWW.SPRUCEANDGANDER.COM
- PRODUCT: CAFE
- MATERIAL: STAINLESS STEEL

SCALE: 1" = 10'-0"

0' 5' 10' 20'

TO OBTAIN LOCATION OF PARTICIPATING UNDERGROUND FACILITIES BEFORE YOU DIG IN WISCONSIN
CALL DIGGERS HOTLINE
1-800-242-8511
TOLL FREE
WIS. STATUTE 182.0175 (1974) REQUIRES MIN. OF 3 WORK DAYS NOTICE BEFORE YOU EXCAVATE

REALM COLLABORATIVE
100 E BROAD STREET
SUITE 1710
COLUMBUS, OHIO 43215
PHONE 614.670.7390
www.REALMCOLLABORATIVE.com

PROJECT INFORMATION

WS Hilldale Phase 3

HILLDALE MADISON

702 N Midvale Blvd
Madison, WI 53705

ISSUANCE AND REVISIONS

DATE	DESCRIPTION
03/13/2023	CITY SUBMITTAL

KEY PLAN

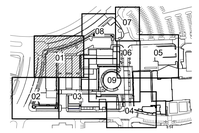

SHEET INFORMATION

PROGRESS DOCUMENTS NOT FOR CONSTRUCTION

These documents reflect progress and intent and may be subject to change, including additional detail. These are not final construction documents and shall not be used for final bidding or construction-related purposes.

PROJECT MANAGER	REALM
PROJECT NUMBER	2021-03

LANDSCAPE SITE PLAN - ZONE 1

L111

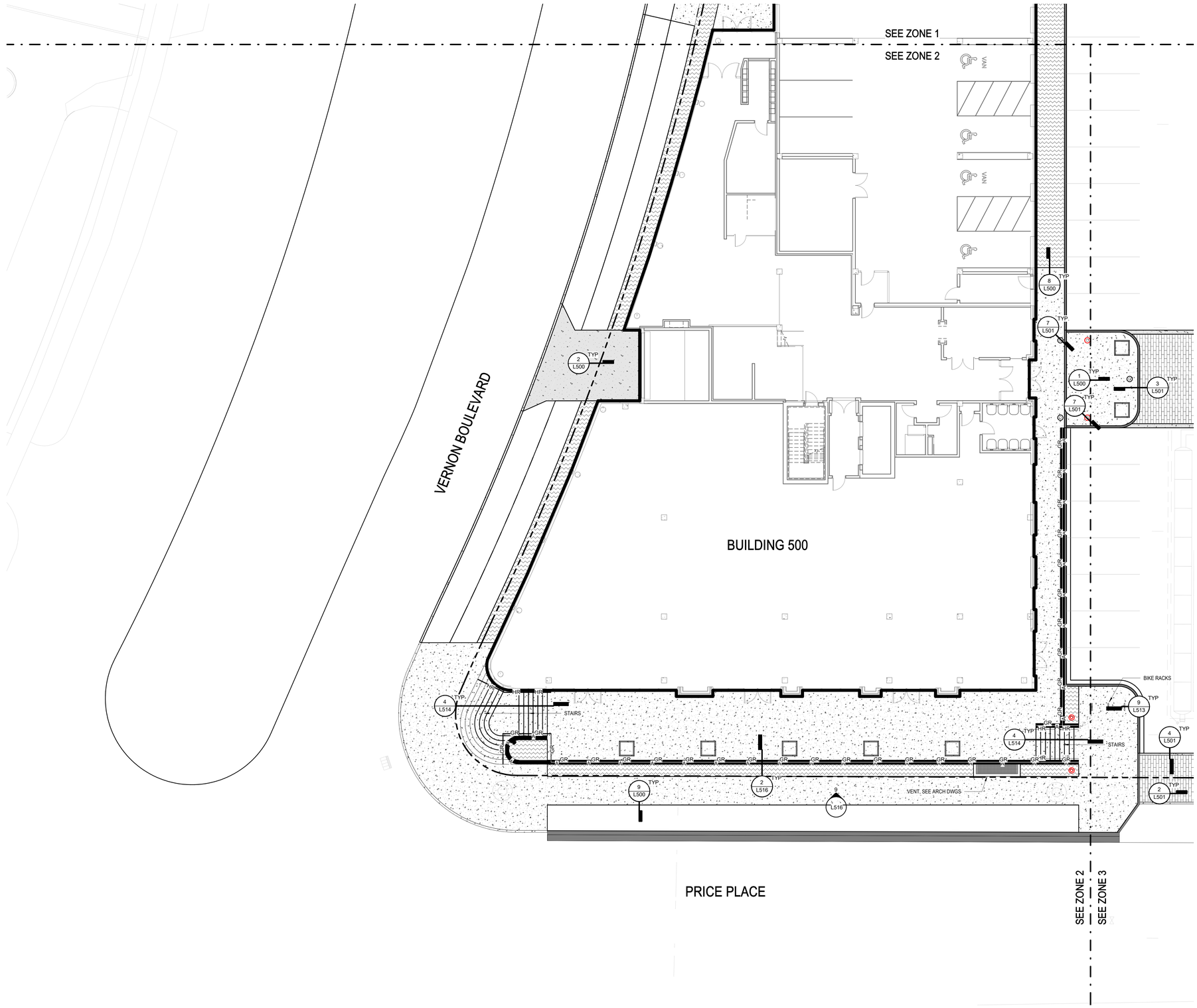

MULCH
- FINELY SHREDDED HARDWOOD MULCH
- DEPTH: 2" DEEP
- COLOR: NATURAL

PED VEH

CONCRETE PAVING
- PEDESTRIAN & VEHICLUAR AREAS
- LIGHT BROOM FINISH
- SAW CUT, DECORATIVE AND SEALED JOINTS
- COLOR: NATURAL

CONCRETE UNIT PAVING - TYPE 1 (NON-PERMEABLE)
- MFR: UNILOCK WWW.UNILOCK.COM
- PRODUCT: ECO-PROMENADE (11.75" X 3" X 3.875")
- COLOR: SERIES FINISH FROM MFR FULL RANGE
- NON-PERM BASE: CONCRETE SUBSLAB ON AGGREGATE BASE
- STABILIZED SAND JOINTS

CONCRETE UNIT PAVING - TYPE 2 (PERMEABLE)
- MFR: UNILOCK WWW.UNILOCK.COM
- PRODUCT: ECO-PROMENADE (11.75" X 3" X 3.875")
- COLOR: SERIES FINISH FROM MFR FULL RANGE
- PERMEABLE BASE: PER CIVIL
- SEE CIVIL DRAWINGS

GRANITE COBBLE
- PRODUCT: 4" X 4" X 4" GRANITE COBBLE
- COLOR: GREY RANGE
- BASE: SAND SETTING BED ON CONCRETE SUBSLAB
- STABILIZED SAND JOINTS

LIMESTONE SLABS
- PRODUCT: SIZE PER PLAN X 3" LIMESTONE SLAB
- COLOR: GREY RANGE
- BASE: SAND SETTING BED ON CONCRETE SUBSLAB
- STABILIZED SAND JOINTS

LIMESTONE PLINTHS
- PER PLAN X 18" HT LIMESTONE
- COLOR: GREY RANGE

WOOD BLOCK SETAING
- PER PLAN X 18" HT

PRECAST STEPS / SEATWALLS
- MFR: WAUSAU TILE WWW.WAUSAUTILE.COM
- PRODUCT: CUSTOM PRECAST
- COLOR: MFR FULL COLOR RANGE

ARTIFICIAL TURF
- MFR: XGRASS WWW.XGRASS.COM
- PRODUCT: PREMIER NATURAL
- FILL: ENVIROFILL; BASE: TILE PAVER

HR HR HR

HANDRAILING
- POWDER COATED STEEL, BLACK
- FLAT BAR STEEL (2" X 1/2")

GR GR GR

GUARDRAILING
- POWDER COATED STEEL, BLACK
- HORIZONTAL FLAT BAR STEEL (2" X 1/2")

A A A

WALL - TYPE A
- CIP CONCRETE RETAINING WALL W/ REINFORCEMENT
- SMOOTH FORM LINER FINISH

B B B

WALL - TYPE B
- RIB ROCK LANDSCAPE BLOCK SEGMENTAL WALL
- COLOR: FROM MFR FULL RANGE, ROUGH TEXTURE

C C C

WALL TYPE C
- 3/8" BENT PLATE STEEL PLANTER EDGE
- ATTACHED TO CONCRETE FOOTER

F F F

HILLDALE FRAME
- STEEL FRAME STRUCTURE

S S S

SLOT DRAIN
- MFR: DURATRENCH
- PRODUCT: SS RADIUS SLOT DRAIN

TD TD TD

TRENCH DRAIN
- MFR: ACO DRAIN
- PRODUCT: K50/ KS50 2"

STAIRS
- CIP CONCRETE

PLANTERS
- VARIOUS SIZES, BY OWNER

TREE GRATE
- MFR: URBAN ACCESSORIES
- PRODUCT: JAMISON 2000
- COLOR: BRUSHED ALUMINUM

LIGHTING
- POLE LEVEL LIGHTING
- SEE ELECTRICAL DRAWINGS

NON-LIGHT LIGHT

BOLLARD
- MFR: FORMS AND SURFACES WWW.FORMS-SURFACES.COM
- PRODUCT: HELIO SERIES 600
- MATERIAL: STAINLESS STEEL

BIKE RACK
- MFR: SPRUCE AND GANDER WWW.SPRUCEANDGANDER.COM
- PRODUCT: CAFE
- MATERIAL: STAINLESS STEEL

SCALE: 1" = 10'-0"

0' 5' 10' 20'

TO OBTAIN LOCATION OF UNDERGROUND UTILITY FACILITIES BEFORE YOU DIG IN WISCONSIN

CALL DIGGERS HOTLINE
1-800-242-8511
TOLL FREE

WIS. STATUTE 182.0175 (1974) REQUIRES MIN. OF 3 WORK DAYS NOTICE BEFORE YOU EXCAVATE

REALM
COLLABORATIVE
100 E BROAD STREET
SUITE 1710
COLUMBUS, OHIO 43215
PHONE 614.670.7390
www.REALMCOLLABORATIVE.com

PROJECT INFORMATION

WS Hilldale Phase 3

HILLDALE
MADISON

702 N Midvale Blvd
Madison, WI 53705

ISSUANCE AND REVISIONS

DATE	DESCRIPTION
03/13/2023	CITY SUBMITTAL

KEY PLAN

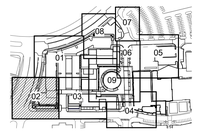

SHEET INFORMATION

PROGRESS DOCUMENTS NOT FOR CONSTRUCTION

These documents reflect progress and intent and may be subject to change, including additional detail. These are not final construction documents and shall not be used for final bidding or construction-related purposes.

PROJECT MANAGER	REALM
PROJECT NUMBER	2021-03

LANDSCAPE SITE PLAN - ZONE 2

L112

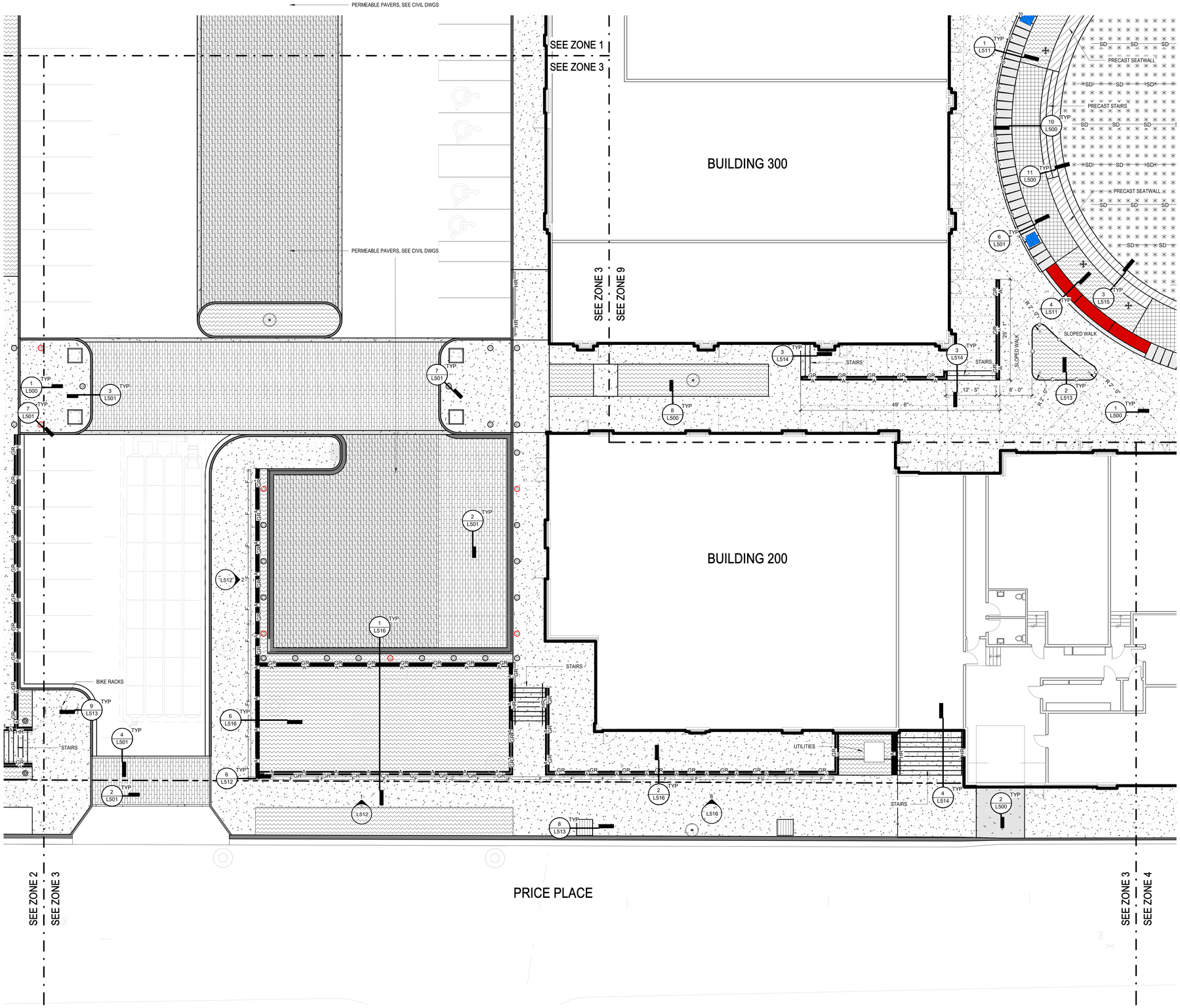

MULCH
- FINELY SHREDDED HARDWOOD MULCH
- DEPTH: 2" DEEP
- COLOR: NATURAL

PED VEH

CONCRETE PAVING
- PEDESTRIAN & VEHICLUAR AREAS
- LIGHT BROOM FINISH
- SAW CUT, DECORATIVE AND SEALED JOINTS
- COLOR: NATURAL

CONCRETE UNIT PAVING - TYPE 1 (NON-PERMEABLE)
- MFR: UNILOCK WWW.UNILOCK.COM
- PRODUCT: ECO-PROMENADE (11.75" X 3" X 3.875")
- COLOR: SERIES FINISH FROM MFR FULL RANGE
- NON-PERM BASE: CONCRETE SUBSLAB ON AGGREGATE BASE
- STABILIZED SAND JOINTS

CONCRETE UNIT PAVING - TYPE 2 (PERMEABLE)
- MFR: UNILOCK WWW.UNILOCK.COM
- PRODUCT: ECO-PROMENADE (11.75" X 3" X 3.875")
- COLOR: SERIES FINISH FROM MFR FULL RANGE
- PERMEABLE BASE: PER CIVIL
- SEE CIVIL DRAWINGS

GRANITE COBBLE
- PRODUCT: 4" X 4" X 4" GRANITE COBBLE
- COLOR: GREY RANGE
- BASE: SAND SETTING BED ON CONCRETE SUBSLAB
- STABILIZED SAND JOINTS

LIMESTONE SLABS
- PRODUCT: SIZE PER PLAN X 3" LIMESTONE SLAB
- COLOR: GREY RANGE
- BASE: SAND SETTING BED ON CONCRETE SUBSLAB
- STABILIZED SAND JOINTS

LIMESTONE PLINTHS
- PER PLAN X 18" HT LIMESTONE
- COLOR: GREY RANGE

WOOD BLOCK SETAING
- PER PLAN X 18" HT

PRECAST STEPS / SEATWALLS
- MFR: WAUSAU TILE WWW.WAUSAUTILE.COM
- PRODUCT: CUSTOM PRECAST
- COLOR: MFR FULL COLOR RANGE

ARTIFICIAL TURF
- MFR: XGRASS WWW.XGRASS.COM
- PRODUCT: PREMIER NATURAL
- FILL: ENVIROFILL; BASE: TILE PAVER

HR HR HR

HANDRAILING
- POWDER COATED STEEL BLACK
- FLAT BAR STEEL (2" X 1/2")

GR GR GR

GUARDRAILING
- POWDER COATED STEEL BLACK
- HORIZONTAL FLAT BAR STEEL (2" X 1/2")

A A A

WALL - TYPE A
- CIP CONCRETE RETAINING WALL W/ REINFORCEMENT
- SMOOTH FORM LINER FINISH

B B B

WALL - TYPE B
- RIB ROCK LANDSCAPE BLOCK SEGMENTAL WALL
- COLOR: FROM MFR FULL RANGE, ROUGH TEXTURE

C C C

WALL TYPE C
- 3/8" BENT PLATE STEEL PLANTER EDGE
- ATTACHED TO CONCRETE FOOTER

F F F

HILLDALE FRAME
- STEEL FRAME STRUCTURE

S S S

SLOT DRAIN
- MFR: DURATRENCH
- PRODUCT: SS RADIUS SLOT DRAIN

TD TD TD

TRENCH DRAIN
- MFR: ACO DRAIN
- PRODUCT: K50/ KS50 2"

STAIRS
- CIP CONCRETE

PLANTERS
- VARIOUS SIZES, BY OWNER

TREE GRATE
- MFR: URBAN ACCESSORIES
- PRODUCT: JAMISON 2000
- COLOR: BRUSHED ALUMINUM

LIGHTING
- POLE LEVEL LIGHTING
- SEE ELECTRICAL DRAWINGS

NON-LIGHT LIGHT

BOLLARD
- MFR: FORMS AND SURFACES WWW.FORMS-SURFACES.COM
- PRODUCT: HELIO SERIES 600
- MATERIAL: STAINLESS STEEL

BIKE RACK
- MFR: SPRUCE AND GANDER WWW.SPRUCEANDGANDER.COM
- PRODUCT: CAFE
- MATERIAL: STAINLESS STEEL

SCALE: 1" = 10'-0"

0' 5' 10' 20'

TO OBTAIN LOCATION OF PARTICIPATING UNDERGROUND FACILITIES BEFORE YOU DIG IN WISCONSIN

CALL DIGGERS HOTLINE
1-800-242-8511
TOLL FREE

WIS. STATUTE 182.0175 (1974) REQUIRES MIN. OF 3 WORK DAYS NOTICE BEFORE YOU EXCAVATE

REALM COLLABORATIVE

100 E BROAD STREET
SUITE 1710
COLUMBUS, OHIO 43215
PHONE 614.670.7390
www.REALMCOLLABORATIVE.com

PROJECT INFORMATION

WS Hilldale Phase 3

HILLDALE MADISON

702 N Midvale Blvd
Madison, WI 53705

ISSUANCE AND REVISIONS

DATE	DESCRIPTION
03/13/2023	CITY SUBMITTAL

KEY PLAN

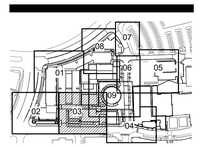

SHEET INFORMATION

PROGRESS DOCUMENTS NOT FOR CONSTRUCTION

These documents reflect progress and intent and may be subject to change, including additional detail. These are not final construction documents and shall not be used for final bidding or construction-related purposes.

PROJECT MANAGER	REALM
PROJECT NUMBER	2021-03

LANDSCAPE SITE PLAN - ZONE 3

L113

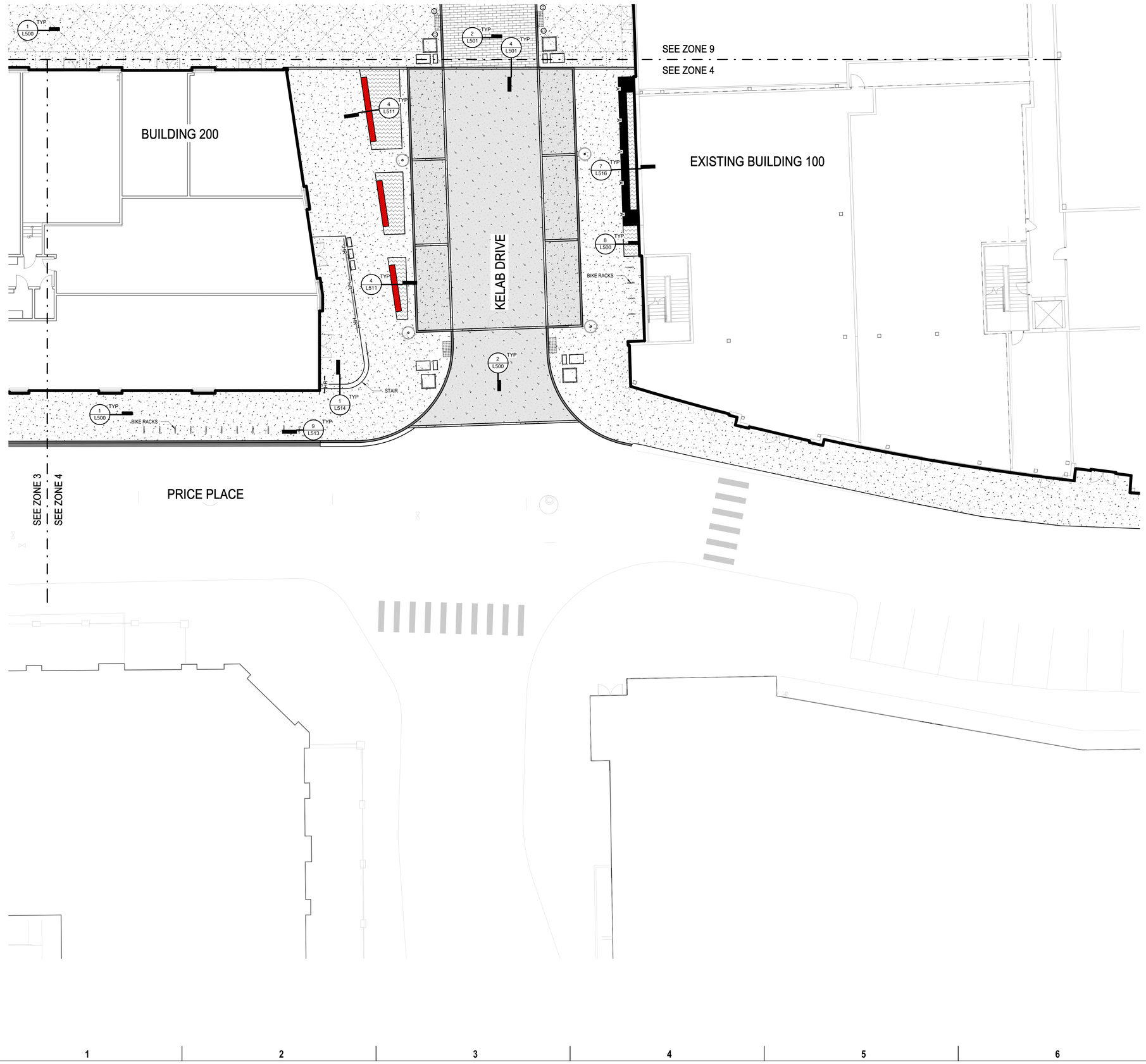

MULCH
- FINELY SHREDDED HARDWOOD MULCH
- DEPTH: 2" DEEP
- COLOR: NATURAL

PED VEH

CONCRETE PAVING
- PEDESTRIAN & VEHICLUAR AREAS
- LIGHT BROOM FINISH
- SAW CUT, DECORATIVE AND SEALED JOINTS
- COLOR: NATURAL

CONCRETE UNIT PAVING - TYPE 1 (NON-PERMEABLE)
- MFR: UNILOCK WWW.UNILOCK.COM
- PRODUCT: ECO-PROMENADE (11.75" X 3" X 3.875")
- COLOR: SERIES FINISH FROM MFR FULL RANGE
- NON-PERM BASE: CONCRETE SUBSLAB ON AGGREGATE BASE
- STABILIZED SAND JOINTS

CONCRETE UNIT PAVING - TYPE 2 (PERMEABLE)
- MFR: UNILOCK WWW.UNILOCK.COM
- PRODUCT: ECO-PROMENADE (11.75" X 3" X 3.875")
- COLOR: SERIES FINISH FROM MFR FULL RANGE
- PERMEABLE BASE: PER CIVIL
- SEE CIVIL DRAWINGS

GRANITE COBBLE
- PRODUCT: 4" X 4" X 4" GRANITE COBBLE
- COLOR: GREY RANGE
- BASE: SAND SETTING BED ON CONCRETE SUBSLAB
- STABILIZED SAND JOINTS

LIMESTONE SLABS
- PRODUCT: SIZE PER PLAN X 3" LIMESTONE SLAB
- COLOR: GREY RANGE
- BASE: SAND SETTING BED ON CONCRETE SUBSLAB
- STABILIZED SAND JOINTS

LIMESTONE PLINTHS
- PER PLAN X 18" HT LIMESTONE
- COLOR: GREY RANGE

WOOD BLOCK SETAING
- PER PLAN X 18" HT

PRECAST STEPS / SEATWALLS
- MFR: WAUSAU TILE WWW.WAUSAUTILE.COM
- PRODUCT: CUSTOM PRECAST
- COLOR: MFR FULL COLOR RANGE

ARTIFICIAL TURF
- MFR: XGRASS WWW.XGRASS.COM
- PRODUCT: PREMIER NATURAL
- FILL: ENVIROFILL; BASE: TILE PAVER

HR HR HR

HANDRAILING
- POWDER COATED STEEL, BLACK
- FLAT BAR STEEL (2" X 1/2")

GR GR GR

GUARDRAILING
- POWDER COATED STEEL, BLACK
- HORIZONTAL FLAT BAR STEEL (2" X 1/2")

A A A

WALL - TYPE A
- CIP CONCRETE RETAINING WALL W/ REINFORCEMENT
- SMOOTH FORM LINER FINISH

B B B

WALL - TYPE B
- RIB ROCK LANDSCAPE BLOCK SEGMENTAL WALL
- COLOR: FROM MFR FULL RANGE, ROUGH TEXTURE

C C C

WALL TYPE C
- 3/8" BENT PLATE STEEL PLANTER EDGE
- ATTACHED TO CONCRETE FOOTER

F F F

HILLDALE FRAME
- STEEL FRAME STRUCTURE

S S S

SLOT DRAIN
- MFR: DURATRENCH
- PRODUCT: SS RADIUS SLOT DRAIN

TD TD TD

TRENCH DRAIN
- MFR: ACO DRAIN
- PRODUCT: K50/ KS50 2"

STAIRS
- CIP CONCRETE

PLANTERS
- VARIOUS SIZES, BY OWNER

TREE GRATE
- MFR: URBAN ACCESSORIES
- PRODUCT: JAMISON 2000
- COLOR: BRUSHED ALUMINUM

LIGHTING
- POLE LEVEL LIGHTING
- SEE ELECTRICAL DRAWINGS

NON-LIGHT | LIGHT

BOLLARD
- MFR: FORMS AND SURFACES WWW.FORMS-SURFACES.COM
- PRODUCT: HELIO SERIES 600
- MATERIAL: STAINLESS STEEL

BIKE RACK
- MFR: SPRUCE AND GANDER WWW.SPRUCEANDGANDER.COM
- PRODUCT: CAFE
- MATERIAL: STAINLESS STEEL

SCALE: 1" = 10'-0"

0' 5' 10' 20'

TO OBTAIN LOCATION OF PARTICIPATING UNDERGROUND FACILITIES BEFORE YOU DIG IN WISCONSIN

CALL DIGGERS HOTLINE
1-800-242-8511
TOLL FREE

WIS. STATUTE 182.0175 (1974) REQUIRES YOU TO GIVE THIS NOTICE BEFORE YOU EXCAVATE

REALM COLLABORATIVE

100 E BROAD STREET
SUITE 1710
COLUMBUS, OHIO 43215
PHONE 614.670.7390
www.REALMCOLLABORATIVE.com

PROJECT INFORMATION

WS Hilldale Phase 3

HILLDALE MADISON

702 N Midvale Blvd
Madison, WI 53705

ISSUANCE AND REVISIONS

DATE	DESCRIPTION
03/13/2023	CITY SUBMITTAL

KEY PLAN

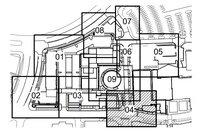

SHEET INFORMATION

PROGRESS DOCUMENTS NOT FOR CONSTRUCTION

These documents reflect progress and intent and may be subject to change, including additional detail. These are not final construction documents and shall not be used for final bidding or construction-related purposes.

PROJECT MANAGER	REALM
PROJECT NUMBER	2021-03

LANDSCAPE SITE PLAN - ZONE 4

L114



MULCH
- FINELY SHREDDED HARDWOOD MULCH
- DEPTH: 2" DEEP
- COLOR: NATURAL

PED VEH

CONCRETE PAVING
- PEDESTRIAN & VEHICLUAR AREAS
- LIGHT BROOM FINISH
- SAW CUT, DECORATIVE AND SEALED JOINTS
- COLOR: NATURAL

CONCRETE UNIT PAVING - TYPE 1 (NON-PERMEABLE)
- MFR: UNILOCK WWW.UNILOCK.COM
- PRODUCT: ECO-PROMENADE (11.75" X 3" X 3.875")
- COLOR: SERIES FINISH FROM MFR FULL RANGE
- NON-PERM BASE: CONCRETE SUBSLAB ON AGGREGATE BASE
- STABILIZED SAND JOINTS

CONCRETE UNIT PAVING - TYPE 2 (PERMEABLE)
- MFR: UNILOCK WWW.UNILOCK.COM
- PRODUCT: ECO-PROMENADE (11.75" X 3" X 3.875")
- COLOR: SERIES FINISH FROM MFR FULL RANGE
- PERMEABLE BASE: PER CIVIL
- SEE CIVIL DRAWINGS

GRANITE COBBLE
- PRODUCT: 4" X 4" X 4" GRANITE COBBLE
- COLOR: GREY RANGE
- BASE: SAND SETTING BED ON CONCRETE SUBSLAB
- STABILIZED SAND JOINTS

LIMESTONE SLABS
- PRODUCT: SIZE PER PLAN X 3" LIMESTONE SLAB
- COLOR: GREY RANGE
- BASE: SAND SETTING BED ON CONCRETE SUBSLAB
- STABILIZED SAND JOINTS

LIMESTONE PLINTHS
- PER PLAN X 18" HT LIMESTONE
- COLOR: GREY RANGE

WOOD BLOCK SETAING
- PER PLAN X 18" HT

PRECAST STEPS / SEATWALLS
- MFR: WAUSAU TILE WWW.WAUSAUTILE.COM
- PRODUCT: CUSTOM PRECAST
- COLOR: MFR FULL COLOR RANGE

ARTIFICIAL TURF
- MFR: XGRASS WWW.XGRASS.COM
- PRODUCT: PREMIER NATURAL
- FILL: ENVIROFILL; BASE: TILE PAVER

HR HR HR

HANDRAILING
- POWDER COATED STEEL, BLACK
- FLAT BAR STEEL (2" X 1/2")

GR GR GR

GUARDRAILING
- POWDER COATED STEEL, BLACK
- HORIZONTAL FLAT BAR STEEL (2" X 1/2")

A A A

WALL - TYPE A
- CIP CONCRETE RETAINING WALL W/ REINFORCEMENT
- SMOOTH FORM LINER FINISH

B B B

WALL - TYPE B
- RIB ROCK LANDSCAPE BLOCK SEGMENTAL WALL
- COLOR: FROM MFR FULL RANGE, ROUGH TEXTURE

C C C

WALL TYPE C
- 3/8" BENT PLATE STEEL PLANTER EDGE
- ATTACHED TO CONCRETE FOOTER

F F F

HILLDALE FRAME
- STEEL FRAME STRUCTURE

S S S

SLOT DRAIN
- MFR: DURATRENCH
- PRODUCT: SS RADIUS SLOT DRAIN

TD TD TD

TRENCH DRAIN
- MFR: ACO DRAIN
- PRODUCT: K50/ KS50 2"

STAIRS
- CIP CONCRETE

PLANTERS
- VARIOUS SIZES, BY OWNER

TREE GRATE
- MFR: URBAN ACCESSORIES
- PRODUCT: JAMISON 2000
- COLOR: BRUSHED ALUMINUM

LIGHTING
- POLE LEVEL LIGHTING
- SEE ELECTRICAL DRAWINGS

NON-LIGHT LIGHT

BOLLARD
- MFR: FORMS AND SURFACES WWW.FORMS-SURFACES.COM
- PRODUCT: HELIO SERIES 600
- MATERIAL: STAINLESS STEEL

BIKE RACK
- MFR: SPRUCE AND GANDER WWW.SPRUCEANDGANDER.COM
- PRODUCT: CAFE
- MATERIAL: STAINLESS STEEL

SCALE: 1" = 10'-0"

0' 5' 10' 20'

811 TO OBTAIN LOCATION OF UNDERGROUND UTILITY GROUND FACILITIES BEFORE YOU DIG IN WISCONSIN

CALL DIGGERS HOTLINE
1-800-242-8511
TOLL FREE

WIS. STATUTE 182.0175 (1974M) REQUIRES MIN. OF 3 WORK DAYS NOTICE BEFORE YOU EXCAVATE

REALM
COLLABORATIVE

100 E BROAD STREET
SUITE 1710
COLUMBUS, OHIO 43215
PHONE 614.670.7390
www.REALMCOLLABORATIVE.com

PROJECT INFORMATION

WS Hilldale Phase 3

HILLDALE
MADISON

702 N Midvale Blvd
Madison, WI 53705

ISSUANCE AND REVISIONS

DATE	DESCRIPTION
03/13/2023	CITY SUBMITTAL

KEY PLAN

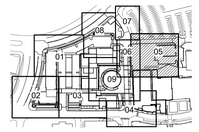

SHEET INFORMATION

PROGRESS DOCUMENTS NOT FOR CONSTRUCTION

These documents reflect progress and intent and may be subject to change, including additional detail. These are not final construction documents and shall not be used for final bidding or construction-related purposes.

PROJECT MANAGER	REALM
PROJECT NUMBER	2021-03

LANDSCAPE SITE PLAN - ZONE 5

L115

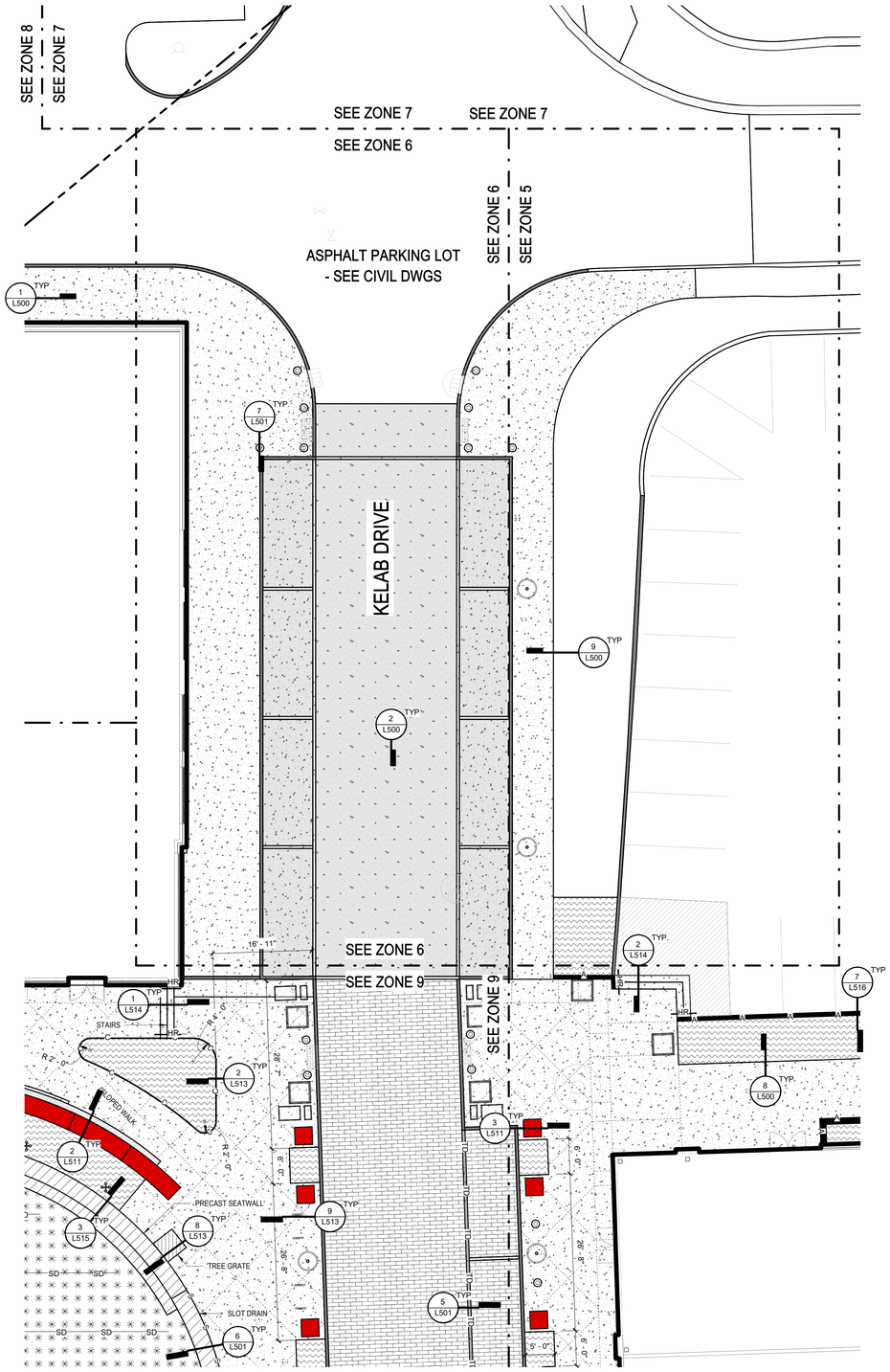

1 LANDSCAPE MATERIALS PLAN - ZONE 6
1" = 10'-0"

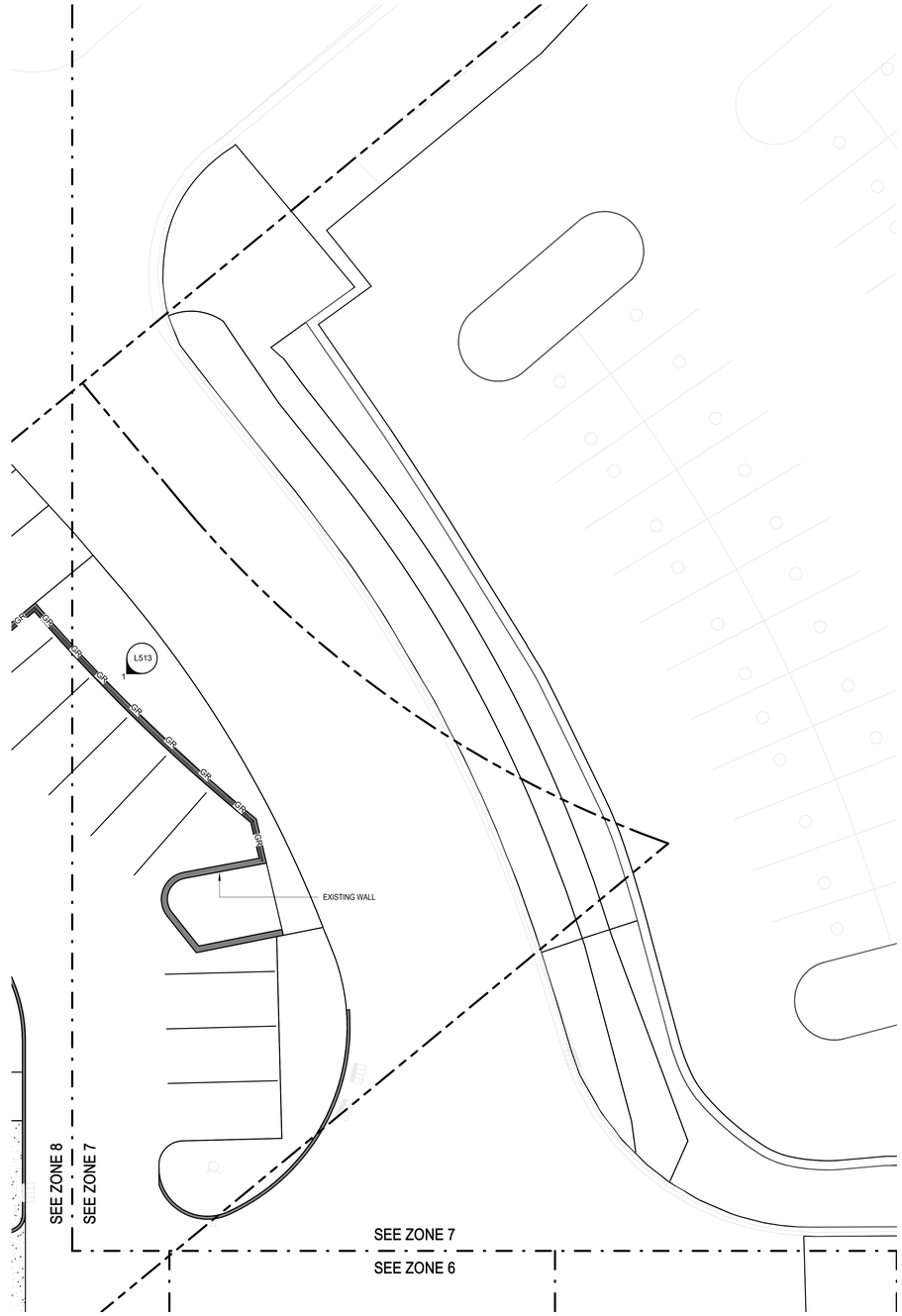

2 LANDSCAPE MATERIALS PLAN - ZONE 7
1" = 10'-0"

MULCH
- FINELY SHREDDED HARDWOOD MULCH
- DEPTH: 2" DEEP
- COLOR: NATURAL

PED VEH

CONCRETE PAVING
- PEDESTRIAN & VEHICLUAR AREAS
- LIGHT BROOM FINISH
- SAW CUT, DECORATIVE AND SEALED JOINTS
- COLOR: NATURAL

CONCRETE UNIT PAVING - TYPE 1 (NON-PERMEABLE)
- MFR: UNILOCK WWW.UNILOCK.COM
- PRODUCT: ECO-PROMENADE (11.75" X 3" X 3.875")
- COLOR: SERIES FINISH FROM MFR FULL RANGE
- NON-PERM BASE: CONCRETE SUBSLAB ON AGGREGATE BASE
- STABILIZED SAND JOINTS

CONCRETE UNIT PAVING - TYPE 2 (PERMEABLE)
- MFR: UNILOCK WWW.UNILOCK.COM
- PRODUCT: ECO-PROMENADE (11.75" X 3" X 3.875")
- COLOR: SERIES FINISH FROM MFR FULL RANGE
- PERMEABLE BASE: PER CIVIL
- SEE CIVIL DRAWINGS

GRANITE COBBLE
- PRODUCT: 4" X 4" X 4" GRANITE COBBLE
- COLOR: GREY RANGE
- BASE: SAND SETTING BED ON CONCRETE SUBSLAB
- STABILIZED SAND JOINTS

LIMESTONE SLABS
- PRODUCT: SIZE PER PLAN X 3" LIMESTONE SLAB
- COLOR: GREY RANGE
- BASE: SAND SETTING BED ON CONCRETE SUBSLAB
- STABILIZED SAND JOINTS

LIMESTONE PLINTHS
- PER PLAN X 18" HT LIMESTONE
- COLOR: GREY RANGE

WOOD BLOCK SETAING
- PER PLAN X 18" HT

PRECAST STEPS / SEATWALLS
- MFR: WAUSAU TILE WWW.WAUSAUTILE.COM
- PRODUCT: CUSTOM PRECAST
- COLOR: MFR FULL COLOR RANGE

ARTIFICIAL TURF
- MFR: XGRASS WWW.XGRASS.COM
- PRODUCT: PREMIER NATURAL
- FILL: ENVIROFILL; BASE: TILE PAVER

HR HR HR

HANDRAILING
- POWDER COATED STEEL, BLACK
- FLAT BAR STEEL (2" X 1/2")

GR GR GR

GUARDRAILING
- POWDER COATED STEEL, BLACK
- HORIZONTAL FLAT BAR STEEL (2" X 1/2")

A A A

WALL - TYPE A
- CIP CONCRETE RETAINING WALL W/ REINFORCEMENT
- SMOOTH FORM LINER FINISH

B B B

WALL - TYPE B
- RIB ROCK LANDSCAPE BLOCK SEGMENTAL WALL
- COLOR: FROM MFR FULL RANGE, ROUGH TEXTURE

C C C

WALL TYPE C
- 3/8" BENT PLATE STEEL PLANTER EDGE
- ATTACHED TO CONCRETE FOOTER

F F F

HILLDALE FRAME
- STEEL FRAME STRUCTURE

S S S

SLOT DRAIN
- MFR: DURATRENCH
- PRODUCT: SS RADIUS SLOT DRAIN

TD TD TD

TRENCH DRAIN
- MFR: ACO DRAIN
- PRODUCT: K50/ KS50 2"

STAIRS
- CIP CONCRETE

PLANTERS
- VARIOUS SIZES, BY OWNER

TREE GRATE
- MFR: URBAN ACCESSORIES
- PRODUCT: JAMISON 2000
- COLOR: BRUSHED ALUMINUM

LIGHTING
- POLE LEVEL LIGHTING
- SEE ELECTRICAL DRAWINGS

NON-LIGHT LIGHT

BOLLARD
- MFR: FORMS AND SURFACES WWW.FORMS-SURFACES.COM
- PRODUCT: HELIO SERIES 600
- MATERIAL: STAINLESS STEEL

BIKE RACK
- MFR: SPRUCE AND GANDER WWW.SPRUCEANDGANDER.COM
- PRODUCT: CAFE
- MATERIAL: STAINLESS STEEL

SCALE: 1" = 10'-0"
0' 5' 10' 20'

TO OBTAIN LOCATION OF PARTICIPATING UNDERGROUND FACILITIES BEFORE YOU DIG IN WISCONSIN
CALL DIGGERS HOTLINE
1-800-242-8511
TOLL FREE
WIS. STATUTE 182.0175 (1974M) REQUIRES MIN. OF 3 WORK DAYS NOTICE BEFORE YOU EXCAVATE

REALM
COLLABORATIVE
100 E BROAD STREET
SUITE 1710
COLUMBUS, OHIO 43215
PHONE 614.670.7390
www.REALMCOLLABORATIVE.com

PROJECT INFORMATION

WS Hilldale Phase 3

HILLDALE
MADISON

702 N Midvale Blvd
Madison, WI 53705

ISSUANCE AND REVISIONS

DATE	DESCRIPTION
03/13/2023	CITY SUBMITTAL

KEY PLAN

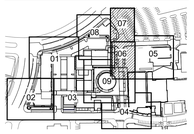

SHEET INFORMATION

PROGRESS DOCUMENTS NOT FOR CONSTRUCTION

These documents reflect progress and intent and may be subject to change, including additional detail. These are not final construction documents and shall not be used for final bidding or construction-related purposes.

PROJECT MANAGER	REALM
PROJECT NUMBER	2021-03

LANDSCAPE SITE PLAN - ZONE 6 + 7

L116

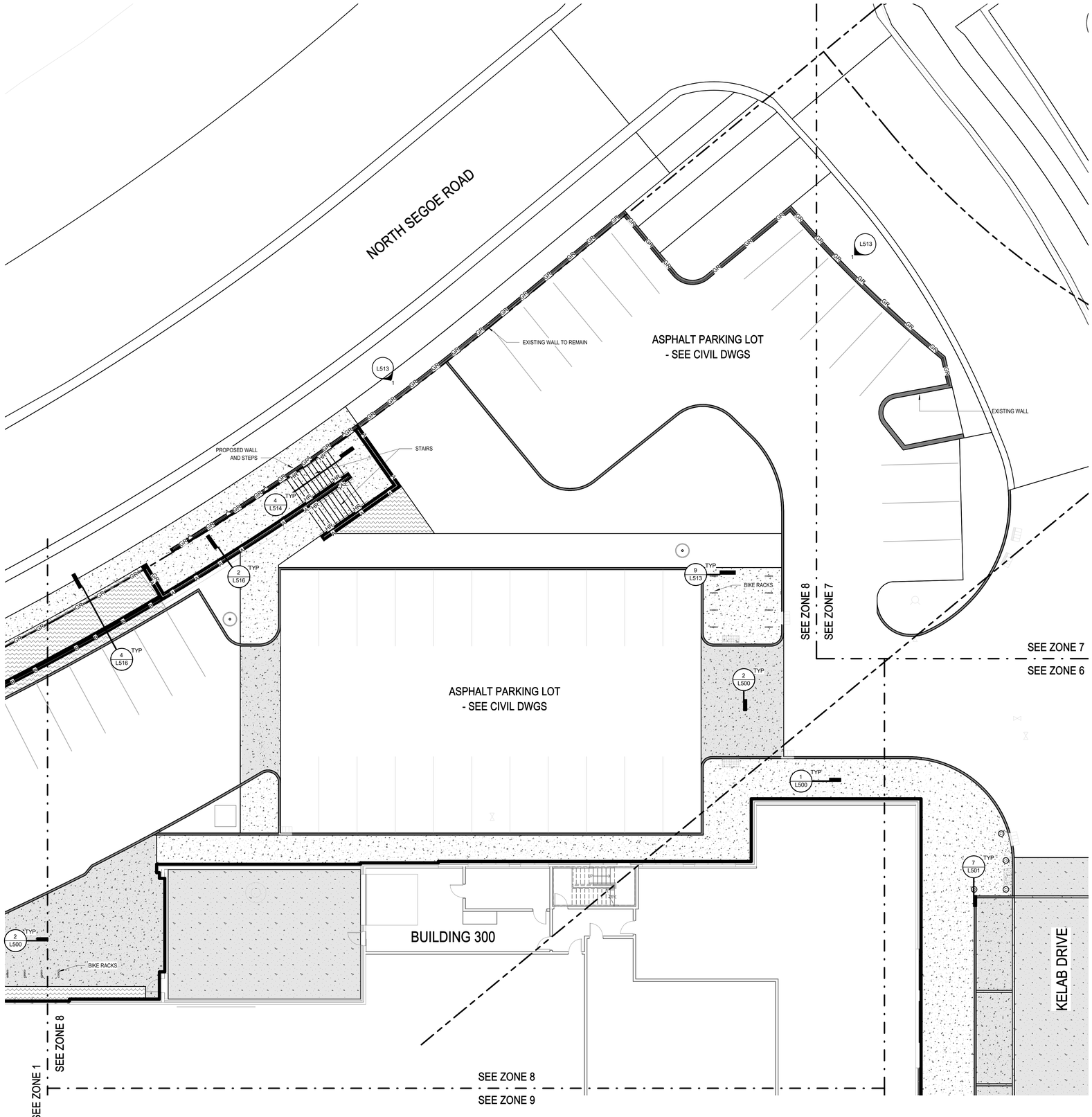

MULCH
- FINELY SHREDDED HARDWOOD MULCH
- DEPTH: 2" DEEP
- COLOR: NATURAL

PED VEH

CONCRETE PAVING
- PEDESTRIAN & VEHICLUAR AREAS
- LIGHT BROOM FINISH
- SAW CUT, DECORATIVE AND SEALED JOINTS
- COLOR: NATURAL

CONCRETE UNIT PAVING - TYPE 1 (NON-PERMEABLE)
- MFR: UNILOCK WWW.UNILOCK.COM
- PRODUCT: ECO-PROMENADE (11.75" X 3" X 3.875")
- COLOR: SERIES FINISH FROM MFR FULL RANGE
- NON-PERM BASE: CONCRETE SUBSLAB ON AGGREGATE BASE
- STABILIZED SAND JOINTS

CONCRETE UNIT PAVING - TYPE 2 (PERMEABLE)
- MFR: UNILOCK WWW.UNILOCK.COM
- PRODUCT: ECO-PROMENADE (11.75" X 3" X 3.875")
- COLOR: SERIES FINISH FROM MFR FULL RANGE
- PERMEABLE BASE: PER CIVIL
- SEE CIVIL DRAWINGS

GRANITE COBBLE
- PRODUCT: 4" X 4" X 4" GRANITE COBBLE
- COLOR: GREY RANGE
- BASE: SAND SETTING BED ON CONCRETE SUBSLAB
- STABILIZED SAND JOINTS

LIMESTONE SLABS
- PRODUCT: SIZE PER PLAN X 3" LIMESTONE SLAB
- COLOR: GREY RANGE
- BASE: SAND SETTING BED ON CONCRETE SUBSLAB
- STABILIZED SAND JOINTS

LIMESTONE PLINTHS
- PER PLAN X 18" HT LIMESTONE
- COLOR: GREY RANGE

WOOD BLOCK SETAING
- PER PLAN X 18" HT

PRECAST STEPS / SEATWALLS
- MFR: WAUSAU TILE WWW.WAUSAUTILE.COM
- PRODUCT: CUSTOM PRECAST
- COLOR: MFR FULL COLOR RANGE

ARTIFICIAL TURF
- MFR: XGRASS WWW.XGRASS.COM
- PRODUCT: PREMIER NATURAL
- FILL: ENVIROFILL; BASE: TILE PAVER

HR HR HR

HANDRAILING
- POWDER COATED STEEL, BLACK
- FLAT BAR STEEL (2" X 1/2")

GR GR GR

GUARDRAILING
- POWDER COATED STEEL, BLACK
- HORIZONTAL FLAT BAR STEEL (2" X 1/2")

A A A

WALL - TYPE A
- CIP CONCRETE RETAINING WALL W/ REINFORCEMENT
- SMOOTH FORM LINER FINISH

B B B

WALL - TYPE B
- RIB ROCK LANDSCAPE BLOCK SEGMENTAL WALL
- COLOR: FROM MFR FULL RANGE, ROUGH TEXTURE

C C C

WALL TYPE C
- 3/8" BENT PLATE STEEL PLANTER EDGE
- ATTACHED TO CONCRETE FOOTER

F F F

HILLDALE FRAME
- STEEL FRAME STRUCTURE

S S S

TD TD TD

SLOT DRAIN
- MFR: DURATRENCH
- PRODUCT: SS RADIUS SLOT DRAIN

TRENCH DRAIN
- MFR: ACO DRAIN
- PRODUCT: K50/ KS50 2"

STAIRS
- CIP CONCRETE

PLANTERS
- VARIOUS SIZES, BY OWNER

TREE GRATE
- MFR: URBAN ACCESSORIES
- PRODUCT: JAMISON 2000
- COLOR: BRUSHED ALUMINUM

LIGHTING
- POLE LEVEL LIGHTING
- SEE ELECTRICAL DRAWINGS

NON-LIGHT LIGHT

BOLLARD
- MFR: FORMS AND SURFACES WWW.FORMS-SURFACES.COM
- PRODUCT: HELIO SERIES 600
- MATERIAL: STAINLESS STEEL

BIKE RACK
- MFR: SPRUCE AND GANDER WWW.SPRUCEANDGANDER.COM
- PRODUCT: CAFE
- MATERIAL: STAINLESS STEEL

SCALE: 1" = 10'-0"

0' 5' 10' 20'

811 TO OBTAIN LOCATION OF PARTICIPANTS' UNDERGROUND FACILITIES BEFORE YOU EXCAVATE

CALL DIGGERS HOTLINE
1-800-242-8511
TOLL FREE

(KS. STATUTE 198.0179 (1974)) REQUIRES MIN. OF 2 WORK DAYS NOTICE BEFORE YOU EXCAVATE

REALM
COLLABORATIVE

100 E BROAD STREET
SUITE 1710
COLUMBUS, OHIO 43215
PHONE 614.670.7390
www.REALMCOLLABORATIVE.com

PROJECT INFORMATION

WS Hilldale Phase 3

HILLDALE
MADISON

702 N Midvale Blvd
Madison, WI 53705

ISSUANCE AND REVISIONS

DATE	DESCRIPTION
03/13/2023	CITY SUBMITTAL

KEY PLAN

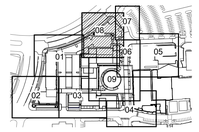

SHEET INFORMATION

PROGRESS DOCUMENTS NOT FOR CONSTRUCTION

These documents reflect progress and intent and may be subject to change, including additional detail. These are not final construction documents and shall not be used for final bidding or construction-related purposes.

PROJECT MANAGER	REALM
PROJECT NUMBER	2021-03

LANDSCAPE SITE PLAN - ZONE 8

L117

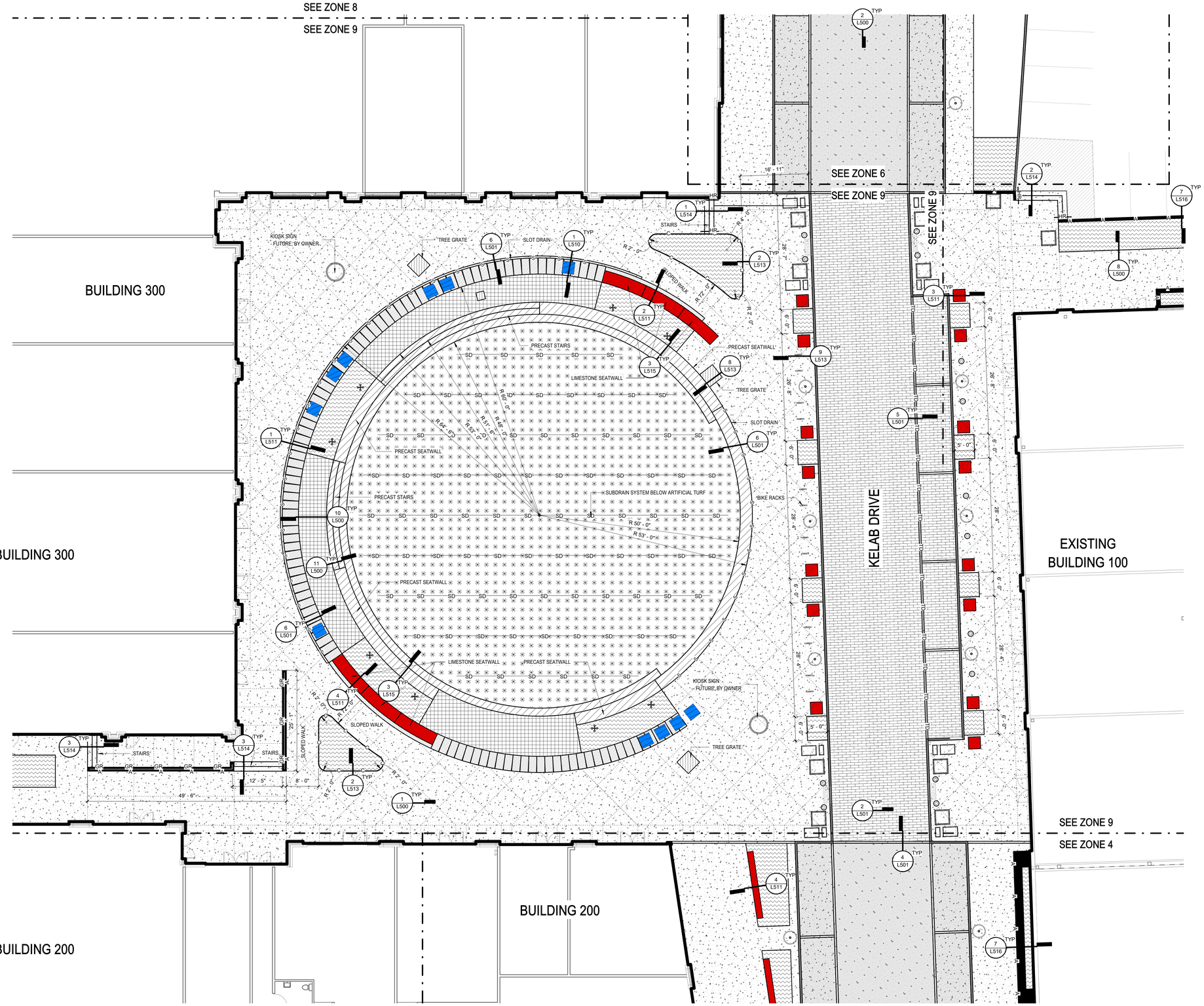

MULCH
- FINELY SHREDDED HARDWOOD MULCH
- DEPTH: 2" DEEP
- COLOR: NATURAL

PED VEH

CONCRETE PAVING
- PEDESTRIAN & VEHICLUAR AREAS
- LIGHT BROOM FINISH
- SAW CUT, DECORATIVE AND SEALED JOINTS
- COLOR: NATURAL

CONCRETE UNIT PAVING - TYPE 1 (NON-PERMEABLE)
- MFR: UNILOCK WWW.UNILOCK.COM
- PRODUCT: ECO-PROMENADE (11.75" X 3" X 3.875")
- COLOR: SERIES FINISH FROM MFR FULL RANGE
- NON-PERM BASE: CONCRETE SUBSLAB ON AGGREGATE BASE
- STABILIZED SAND JOINTS

CONCRETE UNIT PAVING - TYPE 2 (PERMEABLE)
- MFR: UNILOCK WWW.UNILOCK.COM
- PRODUCT: ECO-PROMENADE (11.75" X 3" X 3.875")
- COLOR: SERIES FINISH FROM MFR FULL RANGE
- PERMEABLE BASE: PER CIVIL
- SEE CIVIL DRAWINGS

GRANITE COBBLE
- PRODUCT: 4" X 4" X 4" GRANITE COBBLE
- COLOR: GREY RANGE
- BASE: SAND SETTING BED ON CONCRETE SUBSLAB
- STABILIZED SAND JOINTS

LIMESTONE SLABS
- PRODUCT: SIZE PER PLAN X 3" LIMESTONE SLAB
- COLOR: GREY RANGE
- BASE: SAND SETTING BED ON CONCRETE SUBSLAB
- STABILIZED SAND JOINTS

LIMESTONE PLINTHS
- PER PLAN X 18" HT LIMESTONE
- COLOR: GREY RANGE

WOOD BLOCK SETAING
- PER PLAN X 18" HT

PRECAST STEPS / SEATWALLS
- MFR: WAUSAU TILE WWW.WAUSAUTILE.COM
- PRODUCT: CUSTOM PRECAST
- COLOR: MFR FULL COLOR RANGE

ARTIFICIAL TURF
- MFR: XGRASS WWW.XGRASS.COM
- PRODUCT: PREMIER NATURAL
- FILL: ENVIROFILL; BASE: TILE PAVER

HR HR HR

HANDRAILING
- POWDER COATED STEEL, BLACK
- FLAT BAR STEEL (2" X 1/2")

GR GR GR

GUARDRAILING
- POWDER COATED STEEL, BLACK
- HORIZONTAL FLAT BAR STEEL (2" X 1/2")

A A A

WALL - TYPE A
- CIP CONCRETE RETAINING WALL W/ REINFORCEMENT
- SMOOTH FORM LINER FINISH

B B B

WALL - TYPE B
- RIB ROCK LANDSCAPE BLOCK SEGMENTAL WALL
- COLOR: FROM MFR FULL RANGE, ROUGH TEXTURE

C C C

WALL TYPE C
- 3/8" BENT PLATE STEEL PLANTER EDGE
- ATTACHED TO CONCRETE FOOTER

F F F

HILLDALE FRAME
- STEEL FRAME STRUCTURE

S S S

SLOT DRAIN
- MFR: DURATRENCH
- PRODUCT: SS RADIUS SLOT DRAIN

TD TD TD

TRENCH DRAIN
- MFR: ACO DRAIN
- PRODUCT: K50/ KS50 2"

STAIRS
- CIP CONCRETE

PLANTERS
- VARIOUS SIZES, BY OWNER

TREE GRATE
- MFR: URBAN ACCESSORIES
- PRODUCT: JAMISON 2000
- COLOR: BRUSHED ALUMINUM

LIGHTING
- POLE LEVEL LIGHTING
- SEE ELECTRICAL DRAWINGS

NON-LIGHT LIGHT

BOLLARD
- MFR: FORMS AND SURFACES WWW.FORMS-SURFACES.COM
- PRODUCT: HELIO SERIES 600
- MATERIAL: STAINLESS STEEL

BIKE RACK
- MFR: SPRUCE AND GANDER WWW.SPRUCEANDGANDER.COM
- PRODUCT: CAFE
- MATERIAL: STAINLESS STEEL

SCALE: 1" = 10'-0"

0' 5' 10' 20'

TO OBTAIN LOCATION OF PARTICIPATING UNDERGROUND FACILITIES BEFORE YOU DIG IN WISCONSIN

CALL DIGGERS HOTLINE
1-800-242-8511
TOLL FREE

WIS. STATUTE 182.0175 (1974M) REQUIRES MIN. OF 3 WORK DAYS NOTICE BEFORE YOU EXCAVATE

REALM COLLABORATIVE
100 E BROAD STREET
SUITE 1710
COLUMBUS, OHIO 43215
PHONE 614.670.7390
www.REALMCOLLABORATIVE.com

PROJECT INFORMATION

WS Hilldale Phase 3

HILLDALE MADISON

702 N Midvale Blvd
Madison, WI 53705

ISSUANCE AND REVISIONS

DATE	DESCRIPTION
03/13/2023	CITY SUBMITTAL

KEY PLAN

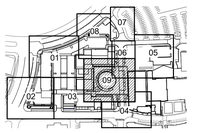

SHEET INFORMATION

PROGRESS DOCUMENTS NOT FOR CONSTRUCTION

These documents reflect progress and intent and may be subject to change, including additional detail. These are not final construction documents and shall not be used for final bidding or construction-related purposes.

PROJECT MANAGER	REALM
PROJECT NUMBER	2021-03

LANDSCAPE SITE PLAN - ZONE 9

L118

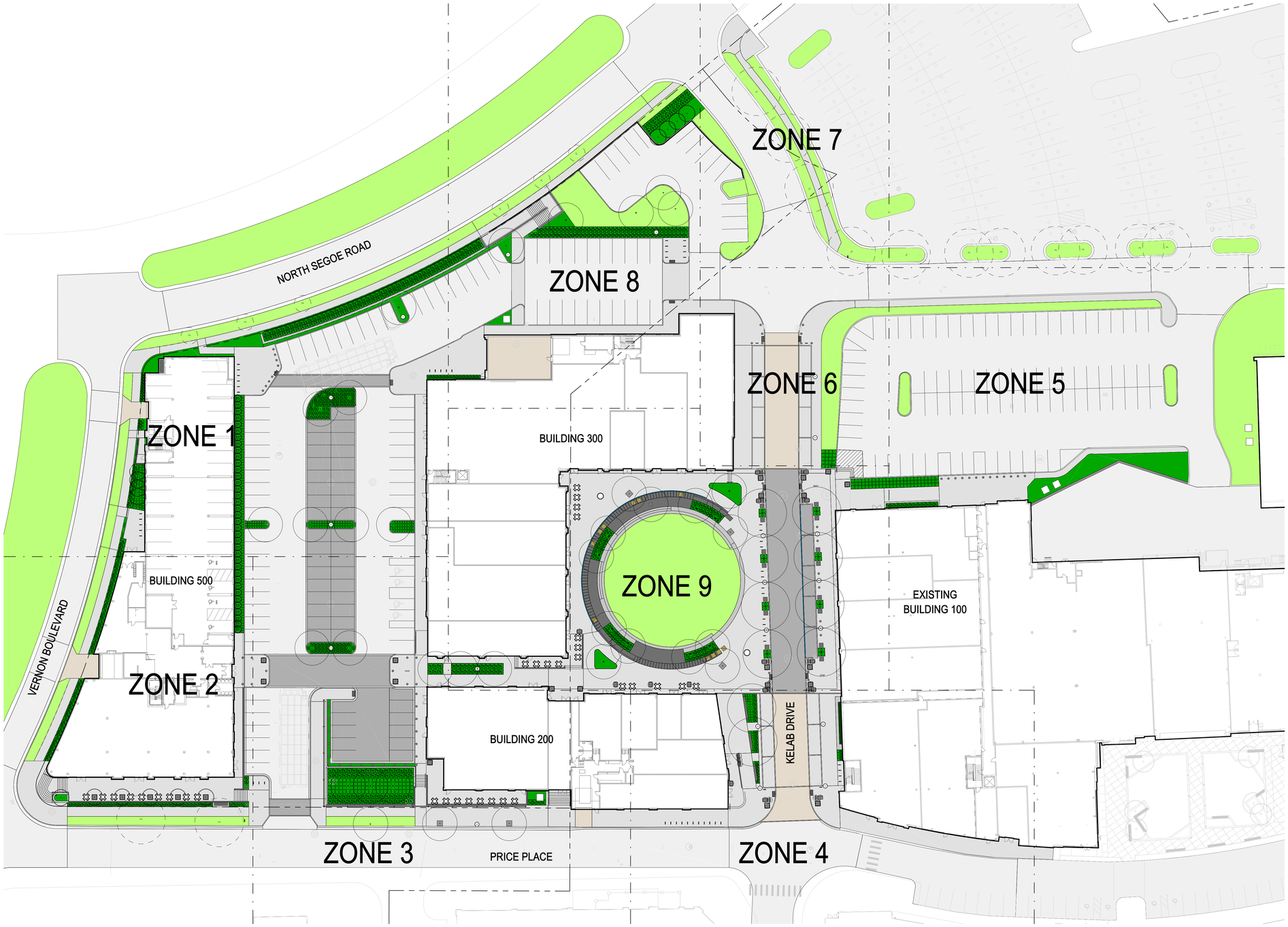

SCALE: 1" = 10'-0"

0' 5' 10' 20'

TO OBTAIN LOCATION OF PARTICIPANTS' UNDERGROUND FACILITIES BEFORE YOU DIG IN WISCONSIN
CALL DIGGERS HOTLINE
1-800-242-8511
TOLL FREE
(WIS. STATUTE 182.0175 (1974)) REQUIRES MIN. OF 3 WORK DAYS NOTICE BEFORE YOU EXCAVATE

REALM
COLLABORATIVE

100 E BROAD STREET
SUITE 1710
COLUMBUS, OHIO 43215
PHONE 614.670.7390
www.REALMCOLLABORATIVE.com

PROJECT INFORMATION

WS Hilldale Phase 3

HILLDALE
MADISON

702 N Midvale Blvd
Madison, WI 53705

ISSUANCE AND REVISIONS

DATE	DESCRIPTION
03/13/2023	CITY SUBMITTAL

KEY PLAN

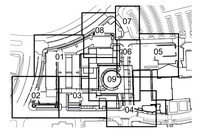

SHEET INFORMATION

PROGRESS DOCUMENTS NOT FOR CONSTRUCTION

These documents reflect progress and intent and may be subject to change, including additional detail. These are not final construction documents and shall not be used for final bidding or construction-related purposes.

PROJECT MANAGER	REALM
PROJECT NUMBER	2021-03

LANDSCAPE PLAN - OVERALL

L170

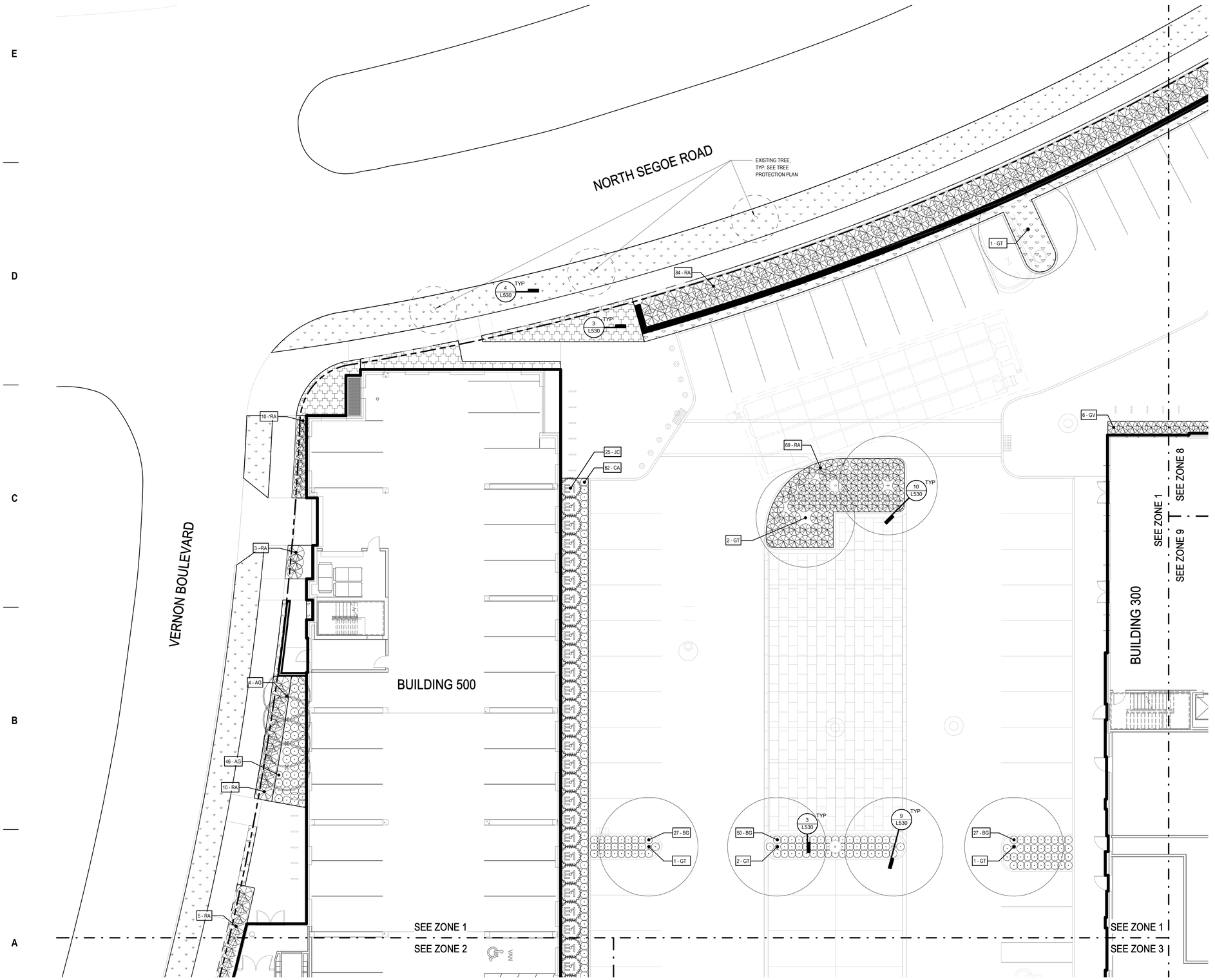

DECIDUOUS TREES

AG — **AMELANCHIER × GRANDIFLORA**
'AUTUMN BRILLIANCE' SERVICEBERRY
- 6' HT. / MULTI-STEM
- CONDITION: B+B
- MATCHED SPECIMEN
- TAGGED BY LANDSCAPE ARCHITECT

AR — **ACER RUBRUM 'FRANK JR' REDPOINTE**
REDPOINT MAPLE
- SIZE: 4" CAL.
- CONDITION: B+B
- MATCHED SPECIMEN
- TAGGED BY LANDSCAPE ARCHITECT

BN — **BETULA NIGRA**
RIVER BIRCH
- SIZE: 3" CAL.
- CONDITION: B+B
- MATCHED SPECIMEN
- TAGGED BY LANDSCAPE ARCHITECT

GT — **GLEDITSIA TRIACANTHOS F. INERMIS**
THORNLESS HONEYLOCUST
- SIZE: 3" CAL.
- CONDITION: B+B
- MATCHED SPECIMEN
- TAGGED BY LANDSCAPE ARCHITECT

PA — **PLATANUS X ACERIFOLIA 'MORTON CIRCLE'**
'EXCLAMATION' LONDON PLANE
- SIZE: 5" CAL.
- CONDITION: B+B
- MATCHED SPECIMEN
- TAGGED BY LANDSCAPE ARCHITECT

QP — **QUERCUS PALUSTRIS**
PIN OAK
- SIZE: 5" CAL.
- CONDITION: B+B
- MATCHED SPECIMEN
- TAGGED BY LANDSCAPE ARCHITECT

ZS — **ZELKOVA SERRATA 'GREEN VASE'**
- JAPANESE ZELKOVA
- SIZE: 5" CAL.
- CONDITION: B+B
- MATCHED SPECIMEN
- TAGGED BY LANDSCAPE ARCHITECT

EVERGREEN TREES

JUNIPERUS CHINENSIS 'SPARTAN'
- UPRIGHT JUNIPER
- SIZE: 6-7'
- CONDITION: B+B
- MATCHED SPECIMEN
- TAGGED BY LANDSCAPE ARCHITECT

SHRUBS

GV — **BUXUS 'GREEN VELVET'**
'GREEN VELVET' BOXWOOD
- SIZE: 18-24"
- CONDITION: B+B
- NATURAL FORM

IG — **ILEX GLABRA 'CHAMZIN'**
NORDIC INKBERRY
- SIZE: 15-18"
- CONDITION: NO. 3 CONT.
- NATURAL FORM

RA — **RHUS AROMATICA 'GRO-LOW'**
FRAGRANT SUMAC
- SIZE: 18-24"
- CONDITION: NO. 3 CONT.

RI — **RIBES ALPINUM**
ALPINE CURRANT
- SIZE: 18-24"
- CONDITION: NO. 5 CONT.

TM — **TAXUS MEDIA 'DENSIFORMIS'**
DENSIFORMIS YEW
- SIZE: 24-36"
- CONDITION: NO. 5 CONT.
- MATCHED SPECIMEN

PERENNIALS + GRASSES

AG — **BOUTELOUA GRACILIS**
- 'BLONDE AMBITION' GRASS
- SIZE: NO. 2 CONT.
- MATCHED SOURCE

CA — **CALAMAGROSTIS ACUTIFLORA**
- KARL FOERSTER REED GRASS
- SIZE: NO. 2 CONT.
- MATCHED SOURCE

PV — **PANICUM VIRGATUM 'SHENANDOAH'**
- SHENANDOAH SWITCH GRASS
- SIZE: NO. 2 CONT.
- MATCHED SOURCE

GROUND COVERS

PT — **PARTHENOCISSUS TRICUSPIDATA 'VEITCHII'**
BOSTON IVY
- SIZE: NO. 2 CONT.
- SPACING: AS SHOWN

ORNAMENTAL GRASSES MIX
- SIZE: NO. 2 CONT.
- SPACING: TRI, 18" O.C.

VINCA MINOR
PERIWINKLE
- SIZE: NO. 1 CONT.
- SPACING: TRI, 12" O.C.

LAWN
- SOD

LAWN, ARTIFICIAL
- MFR: XGRASS
- PREMIER NATURAL

EXTENTS OF SUSPENDED PAVEMENT SYSTEM
- SEE L179 FOR ADDITIONAL DETAILS

SCALE: 1" = 10'-0"
0' 5' 10' 20'

TO OBTAIN LOCATION OF UNDERGROUND FACILITIES BEFORE YOU DIG IN WISCONSIN
CALL DIGGERS HOTLINE
1-800-242-8511
TOLL FREE
WIS. STATUTE 182.0175 (1974) REQUIRES MIN. OF 3 WORK DAYS NOTICE BEFORE YOU EXCAVATE

REALM COLLABORATIVE
100 E BROAD STREET
SUITE 1710
COLUMBUS, OHIO 43215
PHONE 614.670.7390
www.REALMCOLLABORATIVE.com

PROJECT INFORMATION

WS Hilldale Phase 3

HILLDALE
MADISON

702 N Midvale Blvd
Madison, WI 53705

ISSUANCE AND REVISIONS

DATE	DESCRIPTION
03/13/2023	CITY SUBMITTAL

KEY PLAN

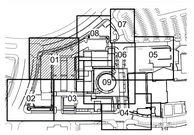

SHEET INFORMATION

PROGRESS DOCUMENTS NOT FOR CONSTRUCTION

These documents reflect progress and intent and may be subject to change, including additional detail. These are not final construction documents and shall not be used for final bidding or construction-related purposes.

PROJECT MANAGER	REALM
PROJECT NUMBER	2021-03

LANDSCAPE PLAN - ZONE 1

L171

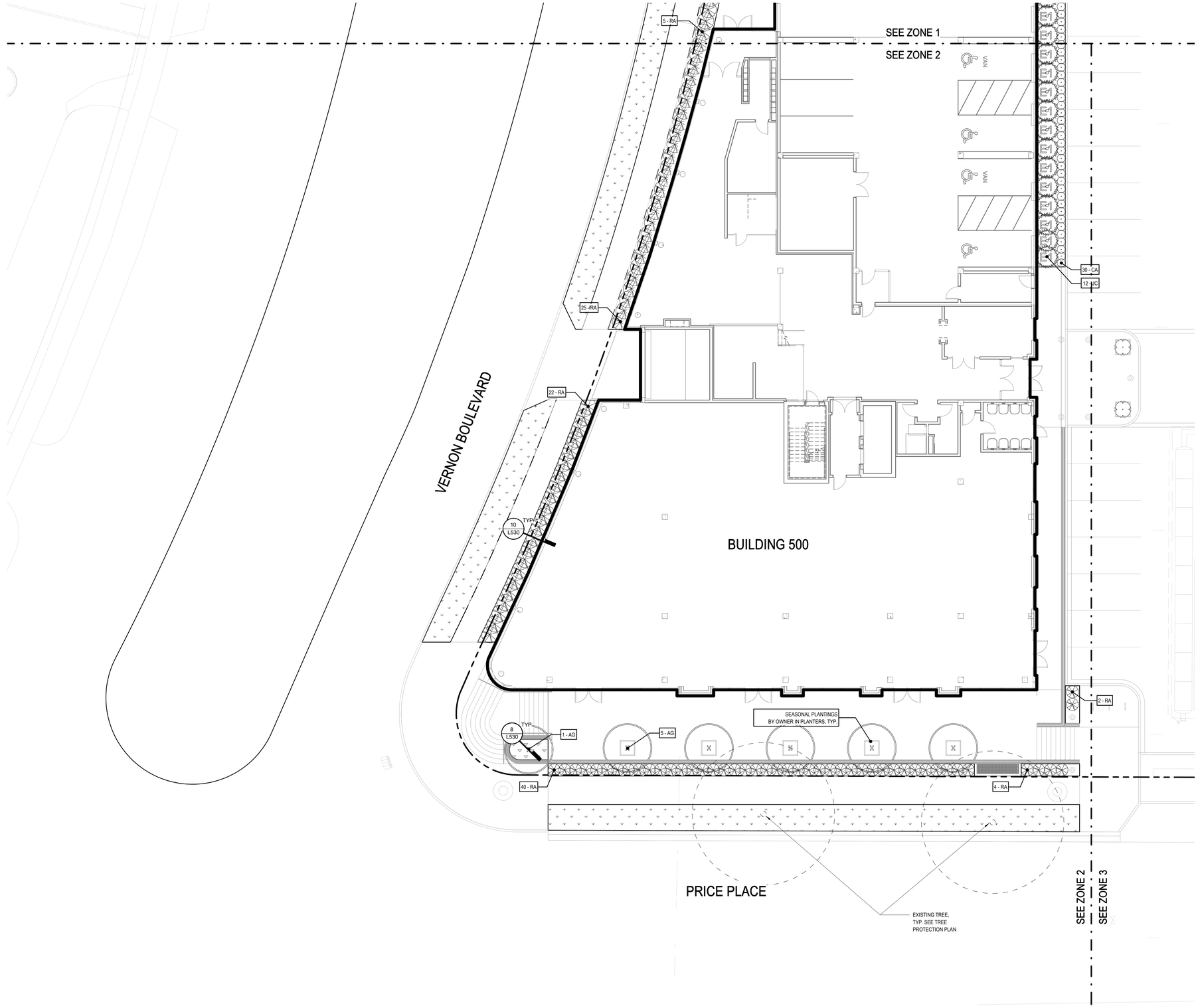

DECIDUOUS TREES

AG — **AMELANCHIER × GRANDIFLORA**
'AUTUMN BRILLIANCE' SERVICEBERRY
- 6' HT. / MULTI-STEM
- CONDITION: B+B
- MATCHED SPECIMEN
- TAGGED BY LANDSCAPE ARCHITECT

AR — **ACER RUBRUM 'FRANK JR' REDPOINTE**
REDPOINT MAPLE
- SIZE: 4" CAL.
- CONDITION: B+B
- MATCHED SPECIMEN
- TAGGED BY LANDSCAPE ARCHITECT

BN — **BETULA NIGRA**
RIVER BIRCH
- SIZE: 3" CAL.
- CONDITION: B+B
- MATCHED SPECIMEN
- TAGGED BY LANDSCAPE ARCHITECT

GT — **GLEDITSIA TRIACANTHOS F. INERMIS**
THORNLESS HONEYLOCUST
- SIZE: 3" CAL.
- CONDITION: B+B
- MATCHED SPECIMEN
- TAGGED BY LANDSCAPE ARCHITECT

PA — **PLATANUS X ACERIFOLIA 'MORTON CIRCLE'**
'EXCLAMATION' LONDON PLANE
- SIZE: 5" CAL.
- CONDITION: B+B
- MATCHED SPECIMEN
- TAGGED BY LANDSCAPE ARCHITECT

QP — **QUERCUS PALUSTRIS**
PIN OAK
- SIZE: 5" CAL.
- CONDITION: B+B
- MATCHED SPECIMEN
- TAGGED BY LANDSCAPE ARCHITECT

ZS — **ZELKOVA SERRATA 'GREEN VASE'**
- JAPANESE ZELKOVA
- SIZE: 5" CAL.
- CONDITION: B+B
- MATCHED SPECIMEN
- TAGGED BY LANDSCAPE ARCHITECT

EVERGREEN TREES

JUNIPERUS CHINENSIS 'SPARTAN'
- UPRIGHT JUNIPER
- SIZE: 6-7'
- CONDITION: B+B
- MATCHED SPECIMEN
- TAGGED BY LANDSCAPE ARCHITECT

SHRUBS

GV — **BUXUS 'GREEN VELVET'**
'GREEN VELVET' BOXWOOD
- SIZE: 18-24"
- CONDITION: B+B
- NATURAL FORM

IG — **ILEX GLABRA 'CHAMZIN'**
NORDIC INKBERRY
- SIZE: 15-18"
- CONDITION: NO. 3 CONT.
- NATURAL FORM

RA — **RHUS AROMATICA 'GRO-LOW'**
FRAGRANT SUMAC
- SIZE: 18-24"
- CONDITION: NO. 3 CONT.

RI — **RIBES ALPINUM**
ALPINE CURRANT
- SIZE: 18-24"
- CONDITION: NO. 5 CONT.

TM — **TAXUS MEDIA 'DENSIFORMIS'**
DENSIFORMIS YEW
- SIZE: 24-36"
- CONDITION: NO. 5 CONT.
- MATCHED SPECIMEN

PERENNIALS + GRASSES

AG — **BOUTELOUA GRACILIS**
- 'BLONDE AMBITION' GRASS
- SIZE: NO. 2 CONT.
- MATCHED SOURCE

CA — **CALAMAGROSTIS ACUTIFLORA**
- KARL FOERSTER REED GRASS
- SIZE: NO. 2 CONT.
- MATCHED SOURCE

PV — **PANICUM VIRGATUM 'SHENANDOAH'**
- SHENANDOAH SWITCH GRASS
- SIZE: NO. 2 CONT.
- MATCHED SOURCE

GROUND COVERS

PT — **PARTHENOCISSUS TRICUSPIDATA 'VEITCHII'**
BOSTON IVY
- SIZE: NO. 2 CONT.
- SPACING: AS SHOWN

ORNAMENTAL GRASSES MIX
- SIZE: NO. 2 CONT.
- SPACING: TRI, 18" O.C.

VINCA MINOR
PERIWINKLE
- SIZE: NO. 1 CONT.
- SPACING: TRI, 12" O.C.

LAWN
- SOD

LAWN, ARTIFICIAL
- MFR: XGRASS
- PREMIER NATURAL

EXTENTS OF SUSPENDED PAVEMENT SYSTEM
- SEE L179 FOR ADDITIONAL DETAILS

SCALE: 1" = 10'-0"
0' 5' 10' 20'

CALL DIGGERS HOTLINE
1-800-242-8511
TOLL FREE
WIS. STATUTE 182.0175 (1974)
REQUIRES 3 WORKING DAYS
NOTICE BEFORE YOU EXCAVATE

REALM COLLABORATIVE
100 E BROAD STREET
SUITE 1710
COLUMBUS, OHIO 43215
PHONE 614.670.7390
www.REALMCOLLABORATIVE.com

PROJECT INFORMATION

WS Hilldale Phase 3

HILLDALE
MADISON

702 N Midvale Blvd
Madison, WI 53705

ISSUANCE AND REVISIONS

DATE	DESCRIPTION
03/13/2023	CITY SUBMITTAL

KEY PLAN

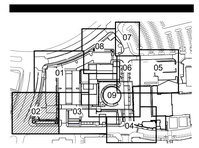

SHEET INFORMATION

PROGRESS DOCUMENTS NOT FOR CONSTRUCTION

These documents reflect progress and intent and may be subject to change, including additional detail. These are not final construction documents and shall not be used for final bidding or construction-related purposes.

PROJECT MANAGER	REALM
PROJECT NUMBER	2021-03

LANDSCAPE PLAN - ZONE 2

L172

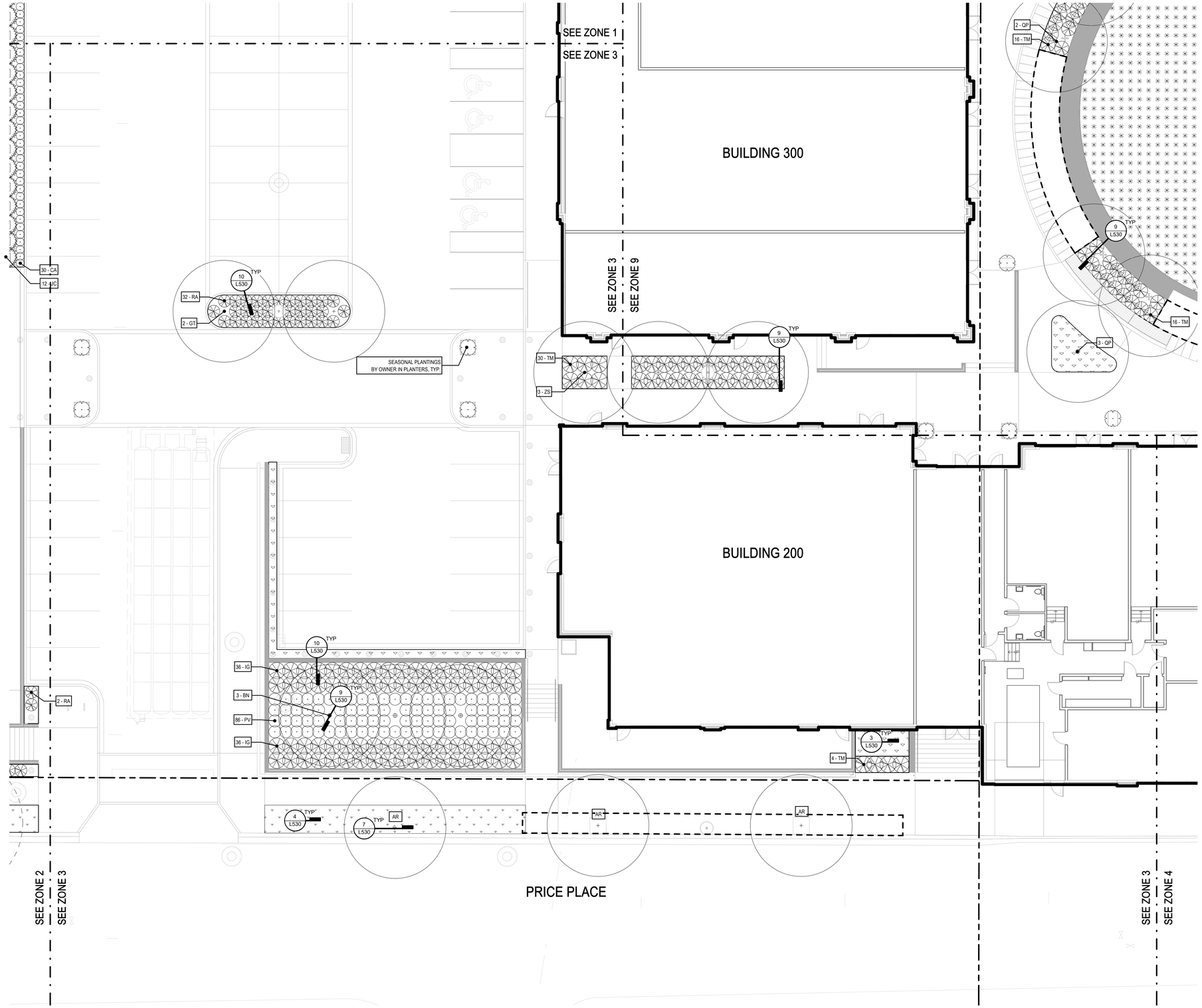

SCALE: 1" = 10'-0"

0' 5' 10' 20'

CALL DIGGERS HOTLINE
1-800-242-8511
TOLL FREE

DECIDUOUS TREES

AG — **AMELANCHIER x GRANDIFLORA**
'AUTUMN BRILLIANCE' SERVICEBERRY
- 6' HT. / MULTI-STEM
- CONDITION: B+B
- MATCHED SPECIMEN
- TAGGED BY LANDSCAPE ARCHITECT

AR — **ACER RUBRUM 'FRANK JR' REDPOINTE**
REDPOINT MAPLE
- SIZE: 4" CAL.
- CONDITION: B+B
- MATCHED SPECIMEN
- TAGGED BY LANDSCAPE ARCHITECT

BN — **BETULA NIGRA**
RIVER BIRCH
- SIZE: 3" CAL.
- CONDITION: B+B
- MATCHED SPECIMEN
- TAGGED BY LANDSCAPE ARCHITECT

GT — **GLEDITSIA TRIACANTHOS F. INERMIS**
THORNLESS HONEYLOCUST
- SIZE: 3" CAL.
- CONDITION: B+B
- MATCHED SPECIMEN
- TAGGED BY LANDSCAPE ARCHITECT

PA — **PLATANUS X ACERIFOLIA 'MORTON CIRCLE'**
'EXCLAMATION' LONDON PLANE
- SIZE: 5" CAL.
- CONDITION: B+B
- MATCHED SPECIMEN
- TAGGED BY LANDSCAPE ARCHITECT

QP — **QUERCUS PALUSTRIS**
PIN OAK
- SIZE: 5" CAL.
- CONDITION: B+B
- MATCHED SPECIMEN
- TAGGED BY LANDSCAPE ARCHITECT

ZS — **ZELKOVA SERRATA 'GREEN VASE'**
- JAPANESE ZELKOVA
- SIZE: 5" CAL.
- CONDITION: B+B
- MATCHED SPECIMEN
- TAGGED BY LANDSCAPE ARCHITECT

EVERGREEN TREES

JUNIPERUS CHINENSIS 'SPARTAN'
- UPRIGHT JUNIPER
- SIZE: 6-7'
- CONDITION: B+B
- MATCHED SPECIMEN
- TAGGED BY LANDSCAPE ARCHITECT

SHRUBS

GV — **BUXUS 'GREEN VELVET'**
'GREEN VELVET' BOXWOOD
- SIZE: 18-24"
- CONDITION: B+B
- NATURAL FORM

IG — **ILEX GLABRA 'CHAMZIN'**
NORDIC INKBERRY
- SIZE: 15-18"
- CONDITION: NO. 3 CONT.
- NATURAL FORM

RA — **RHUS AROMATICA 'GRO-LOW'**
FRAGRANT SUMAC
- SIZE: 18-24"
- CONDITION: NO. 3 CONT.

RI — **RIBES ALPINUM**
ALPINE CURRANT
- SIZE: 18-24"
- CONDITION: NO. 5 CONT.

TM — **TAXUS MEDIA 'DENSIFORMIS'**
DENSIFORMIS YEW
- SIZE: 24-36"
- CONDITION: NO. 5 CONT.
- MATCHED SPECIMEN

PERENNIALS + GRASSES

AG — **BOUTELOUA GRACILIS**
- 'BLONDE AMBITION' GRASS
- SIZE: NO. 2 CONT.
- MATCHED SOURCE

CA — **CALAMAGROSTIS ACUTIFLORA**
- KARL FOERSTER REED GRASS
- SIZE: NO. 2 CONT.
- MATCHED SOURCE

PV — **PANICUM VIRGATUM 'SHENANDOAH'**
- SHENANDOAH SWITCH GRASS
- SIZE: NO. 2 CONT.
- MATCHED SOURCE

GROUND COVERS

PT — **PARTHENOCISSUS TRICUSPIDATA 'VEITCHII'**
BOSTON IVY
- SIZE: NO. 2 CONT.
- SPACING: AS SHOWN

ORNAMENTAL GRASSES MIX
- SIZE: NO. 2 CONT.
- SPACING: TRI, 18" O.C.

VINCA MINOR
PERIWINKLE
- SIZE: NO. 1 CONT.
- SPACING: TRI, 12" O.C.

LAWN
- SOD

LAWN, ARTIFICIAL
- MFR: XGRASS
- PREMIER NATURAL

EXTENTS OF SUSPENDED PAVEMENT SYSTEM
- SEE L179 FOR ADDITIONAL DETAILS

REALM COLLABORATIVE
100 E BROAD STREET
SUITE 1710
COLUMBUS, OHIO 43215
PHONE 614.670.7390
www.REALMCOLLABORATIVE.com

PROJECT INFORMATION

WS Hilldale Phase 3

HILLDALE MADISON

702 N Midvale Blvd
Madison, WI 53705

ISSUANCE AND REVISIONS

DATE	DESCRIPTION
03/13/2023	CITY SUBMITTAL

KEY PLAN

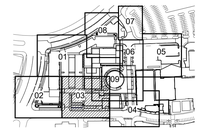

SHEET INFORMATION

PROGRESS DOCUMENTS NOT FOR CONSTRUCTION

These documents reflect progress and intent and may be subject to change, including additional detail. These are not final construction documents and shall not be used for final bidding or construction-related purposes.

PROJECT MANAGER	REALM
PROJECT NUMBER	2021-03

LANDSCAPE PLAN - ZONE 3

L173

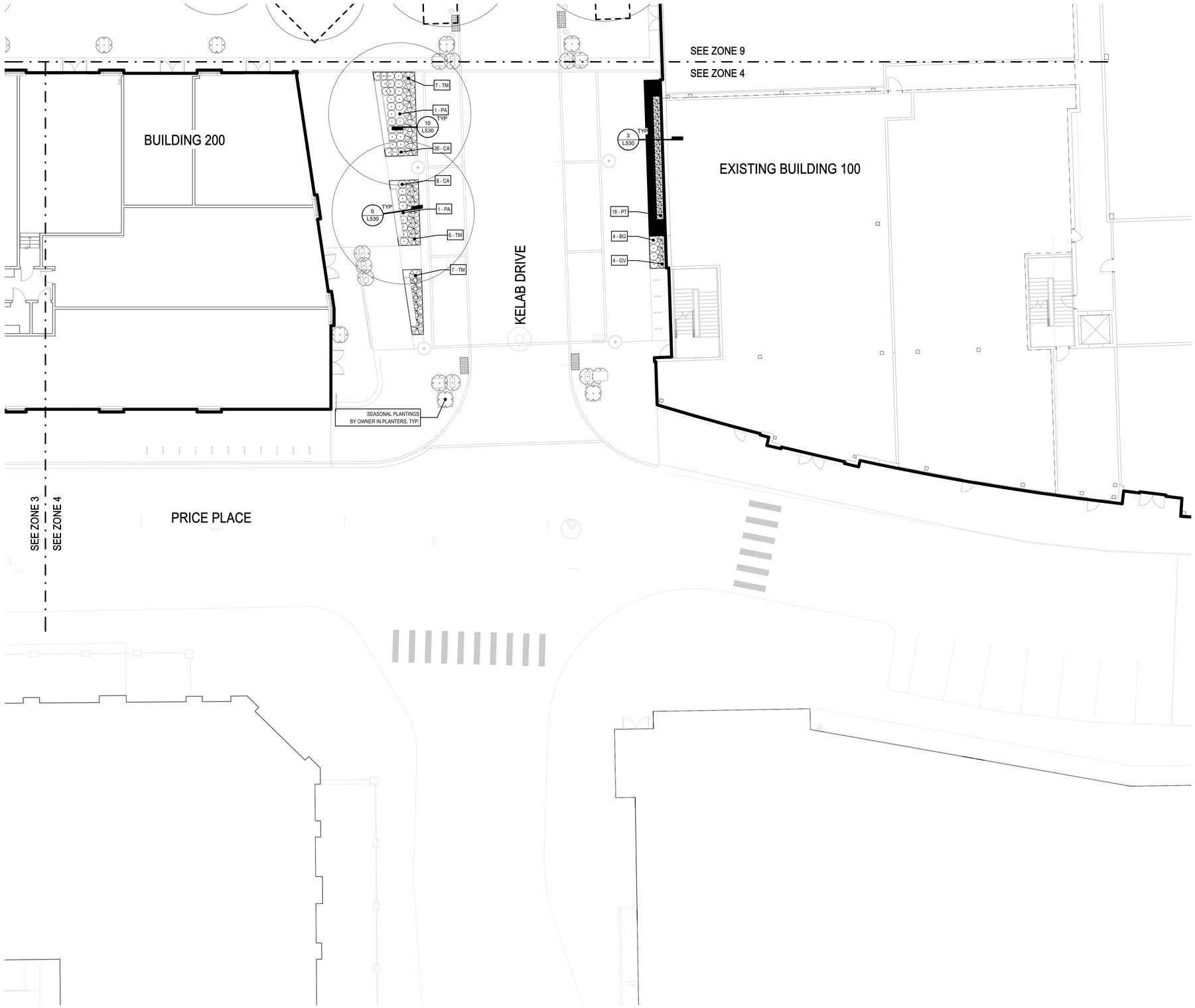

DECIDUOUS TREES

AG — **AMELANCHIER × GRANDIFLORA**
'AUTUMN BRILLIANCE' SERVICEBERRY
- 6' HT. / MULTI-STEM
- CONDITION: B+B
- MATCHED SPECIMEN
- TAGGED BY LANDSCAPE ARCHITECT

AR — **ACER RUBRUM 'FRANK JR' REDPOINTE**
REDPOINT MAPLE
- SIZE: 4" CAL.
- CONDITION: B+B
- MATCHED SPECIMEN
- TAGGED BY LANDSCAPE ARCHITECT

BN — **BETULA NIGRA**
RIVER BIRCH
- SIZE: 3" CAL.
- CONDITION: B+B
- MATCHED SPECIMEN
- TAGGED BY LANDSCAPE ARCHITECT

GT — **GLEDITSIA TRIACANTHOS F. INERMIS**
THORNLESS HONEYLOCUST
- SIZE: 3" CAL.
- CONDITION: B+B
- MATCHED SPECIMEN
- TAGGED BY LANDSCAPE ARCHITECT

PA — **PLATANUS X ACERIFOLIA 'MORTON CIRCLE'**
'EXCLAMATION' LONDON PLANE
- SIZE: 5" CAL.
- CONDITION: B+B
- MATCHED SPECIMEN
- TAGGED BY LANDSCAPE ARCHITECT

QP — **QUERCUS PALUSTRIS**
PIN OAK
- SIZE: 5" CAL.
- CONDITION: B+B
- MATCHED SPECIMEN
- TAGGED BY LANDSCAPE ARCHITECT

ZS — **ZELKOVA SERRATA 'GREEN VASE'**
- JAPANESE ZELKOVA
- SIZE: 5" CAL.
- CONDITION: B+B
- MATCHED SPECIMEN
- TAGGED BY LANDSCAPE ARCHITECT

EVERGREEN TREES

JUNIPERUS CHINENSIS 'SPARTAN'
- UPRIGHT JUNIPER
- SIZE: 6-7'
- CONDITION: B+B
- MATCHED SPECIMEN
- TAGGED BY LANDSCAPE ARCHITECT

SHRUBS

GV — **BUXUS 'GREEN VELVET'**
'GREEN VELVET' BOXWOOD
- SIZE: 18-24"
- CONDITION: B+B
- NATURAL FORM

IG — **ILEX GLABRA 'CHAMZIN'**
NORDIC INKBERRY
- SIZE: 15-18"
- CONDITION: NO. 3 CONT.
- NATURAL FORM

RA — **RHUS AROMATICA 'GRO-LOW'**
FRAGRANT SUMAC
- SIZE: 18-24"
- CONDITION: NO. 3 CONT.

RI — **RIBES ALPINUM**
ALPINE CURRANT
- SIZE: 18-24"
- CONDITION: NO. 5 CONT.

TM — **TAXUS MEDIA 'DENSIFORMIS'**
DENSIFORMIS YEW
- SIZE: 24-36"
- CONDITION: NO. 5 CONT.
- MATCHED SPECIMEN

PERENNIALS + GRASSES

AG — **BOUTELOUA GRACILIS**
- 'BLONDE AMBITION' GRASS
- SIZE: NO. 2 CONT.
- MATCHED SOURCE

CA — **CALAMAGROSTIS ACUTIFLORA**
- KARL FOERSTER REED GRASS
- SIZE: NO. 2 CONT.
- MATCHED SOURCE

PV — **PANICUM VIRGATUM 'SHENANDOAH'**
- SHENANDOAH SWITCH GRASS
- SIZE: NO. 2 CONT.
- MATCHED SOURCE

GROUND COVERS

PT — **PARTHENOCISSUS TRICUSPIDATA 'VEITCHII'**
BOSTON IVY
- SIZE: NO. 2 CONT.
- SPACING: AS SHOWN

ORNAMENTAL GRASSES MIX
- SIZE: NO. 2 CONT.
- SPACING: TRI, 18" O.C.

VINCA MINOR
PERIWINKLE
- SIZE: NO. 1 CONT.
- SPACING: TRI, 12" O.C.

LAWN
- SOD

LAWN, ARTIFICIAL
- MFR: XGRASS
- PREMIER NATURAL

EXTENTS OF SUSPENDED PAVEMENT SYSTEM
- SEE L179 FOR ADDITIONAL DETAILS

SCALE: 1" = 10'-0"
0' 5' 10' 20'

TO OBTAIN LOCATION OF PARTICIPATING UNDERGROUND FACILITIES BEFORE YOU DIG IN WISCONSIN
CALL DIGGERS HOTLINE
1-800-242-8511
TOLL FREE
MIS., STATUTE 182.0175, (1974) REQUIRES MIN. OF 3 WORK DAYS NOTICE BEFORE YOU EXCAVATE

REALM COLLABORATIVE
100 E BROAD STREET
SUITE 1710
COLUMBUS, OHIO 43215
PHONE 614.670.7390
www.REALMCOLLABORATIVE.com

PROJECT INFORMATION

WS Hilldale Phase 3

HILLDALE MADISON

702 N Midvale Blvd
Madison, WI 53705

ISSUANCE AND REVISIONS

DATE	DESCRIPTION
03/13/2023	CITY SUBMITTAL

KEY PLAN

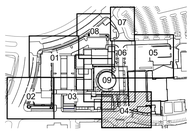

SHEET INFORMATION

PROGRESS DOCUMENTS NOT FOR CONSTRUCTION

These documents reflect progress and intent and may be subject to change, including additional detail. These are not final construction documents and shall not be used for final bidding or construction-related purposes.

PROJECT MANAGER	REALM
PROJECT NUMBER	2021-03

LANDSCAPE PLAN - ZONE 4

L174

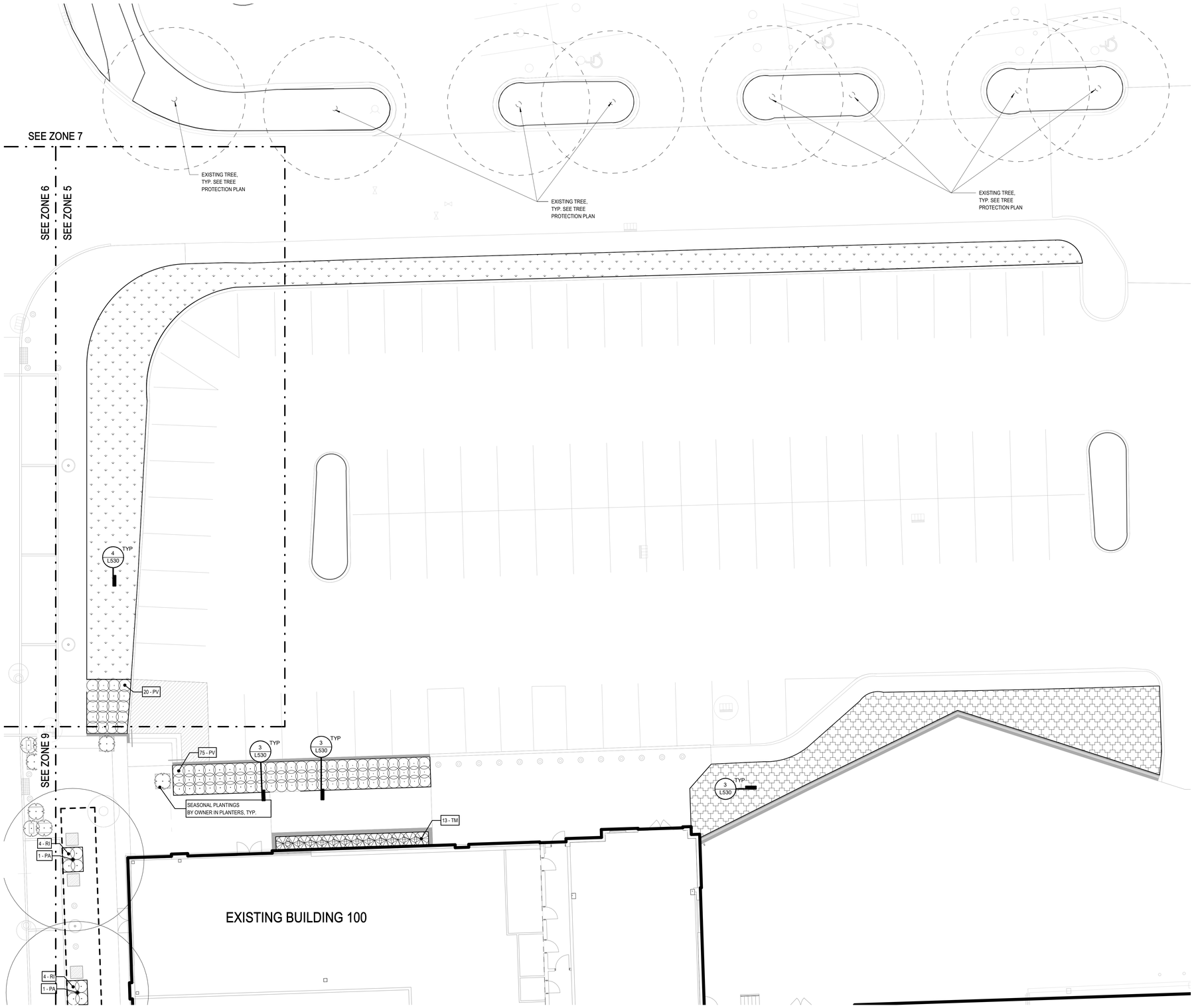

DECIDUOUS TREES

AG — **AMELANCHIER × GRANDIFLORA**
'AUTUMN BRILLIANCE' SERVICEBERRY
- 6' HT. / MULTI-STEM
- CONDITION: B+B
- MATCHED SPECIMEN
- TAGGED BY LANDSCAPE ARCHITECT

AR — **ACER RUBRUM 'FRANK JR' REDPOINTE**
REDPOINT MAPLE
- SIZE: 4" CAL.
- CONDITION: B+B
- MATCHED SPECIMEN
- TAGGED BY LANDSCAPE ARCHITECT

BN — **BETULA NIGRA**
RIVER BIRCH
- SIZE: 3" CAL.
- CONDITION: B+B
- MATCHED SPECIMEN
- TAGGED BY LANDSCAPE ARCHITECT

GT — **GLEDITSIA TRIACANTHOS F. INERMIS**
THORNLESS HONEYLOCUST
- SIZE: 3" CAL.
- CONDITION: B+B
- MATCHED SPECIMEN
- TAGGED BY LANDSCAPE ARCHITECT

PA — **PLATANUS X ACERIFOLIA 'MORTON CIRCLE'**
'EXCLAMATION' LONDON PLANE
- SIZE: 5" CAL.
- CONDITION: B+B
- MATCHED SPECIMEN
- TAGGED BY LANDSCAPE ARCHITECT

QP — **QUERCUS PALUSTRIS**
PIN OAK
- SIZE: 5" CAL.
- CONDITION: B+B
- MATCHED SPECIMEN
- TAGGED BY LANDSCAPE ARCHITECT

ZS — **ZELKOVA SERRATA 'GREEN VASE'**
- JAPANESE ZELKOVA
- SIZE: 5" CAL.
- CONDITION: B+B
- MATCHED SPECIMEN
- TAGGED BY LANDSCAPE ARCHITECT

EVERGREEN TREES

JUNIPERUS CHINENSIS 'SPARTAN'
- UPRIGHT JUNIPER
- SIZE: 6-7'
- CONDITION: B+B
- MATCHED SPECIMEN
- TAGGED BY LANDSCAPE ARCHITECT

SHRUBS

GV — **BUXUS 'GREEN VELVET'**
'GREEN VELVET' BOXWOOD
- SIZE: 18-24"
- CONDITION: B+B
- NATURAL FORM

IG — **ILEX GLABRA 'CHAMZIN'**
NORDIC INKBERRY
- SIZE: 15-18"
- CONDITION: NO. 3 CONT.
- NATURAL FORM

RA — **RHUS AROMATICA 'GRO-LOW'**
FRAGRANT SUMAC
- SIZE: 18-24"
- CONDITION: NO. 3 CONT.

RI — **RIBES ALPINUM**
ALPINE CURRANT
- SIZE: 18-24"
- CONDITION: NO. 5 CONT.

TM — **TAXUS MEDIA 'DENSIFORMIS'**
DENSIFORMIS YEW
- SIZE: 24-36"
- CONDITION: NO. 5 CONT.
- MATCHED SPECIMEN

PERENNIALS + GRASSES

AG — **BOUTELOUA GRACILIS**
- 'BLONDE AMBITION' GRASS
- SIZE: NO. 2 CONT.
- MATCHED SOURCE

CA — **CALAMAGROSTIS ACUTIFLORA**
- KARL FOERSTER REED GRASS
- SIZE: NO. 2 CONT.
- MATCHED SOURCE

PV — **PANICUM VIRGATUM 'SHENANDOAH'**
- SHENANDOAH SWITCH GRASS
- SIZE: NO. 2 CONT.
- MATCHED SOURCE

GROUND COVERS

PT — **PARTHENOCISSUS TRICUSPIDATA 'VEITCHII'**
BOSTON IVY
- SIZE: NO. 2 CONT.
- SPACING: AS SHOWN

ORNAMENTAL GRASSES MIX
- SIZE: NO. 2 CONT.
- SPACING: TRI, 18" O.C.

VINCA MINOR
PERIWINKLE
- SIZE: NO. 1 CONT.
- SPACING: TRI, 12" O.C.

LAWN
- SOD

LAWN, ARTIFICIAL
- MFR: XGRASS
- PREMIER NATURAL

EXTENTS OF SUSPENDED PAVEMENT SYSTEM
- SEE L179 FOR ADDITIONAL DETAILS

SCALE: 1" = 10'-0"

0' 5' 10' 20'

TO OBTAIN LOCATION OF PARTICIPANTS' UNDERGROUND FACILITIES BEFORE YOU DIG IN WISCONSIN
CALL DIGGERS HOTLINE
1-800-242-8511
TOLL FREE
WIS. STATUTE 182.0175 (1974) REQUIRES A MINIMUM THREE WORKING NOTICE BEFORE YOU EXCAVATE.

REALM COLLABORATIVE
100 E BROAD STREET
SUITE 1710
COLUMBUS, OHIO 43215
PHONE 614.670.7390
www.REALMCOLLABORATIVE.com

PROJECT INFORMATION

WS Hilldale Phase 3

HILLDALE
MADISON

702 N Midvale Blvd
Madison, WI 53705

ISSUANCE AND REVISIONS

DATE	DESCRIPTION
03/13/2023	CITY SUBMITTAL

KEY PLAN

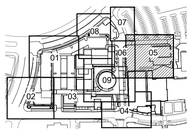

SHEET INFORMATION

PROGRESS DOCUMENTS NOT FOR CONSTRUCTION

These documents reflect progress and intent and may be subject to change, including additional detail. These are not final construction documents and shall not be used for final bidding or construction-related purposes.

PROJECT MANAGER	REALM
PROJECT NUMBER	2021-03

LANDSCAPE PLAN - ZONE 5

L175

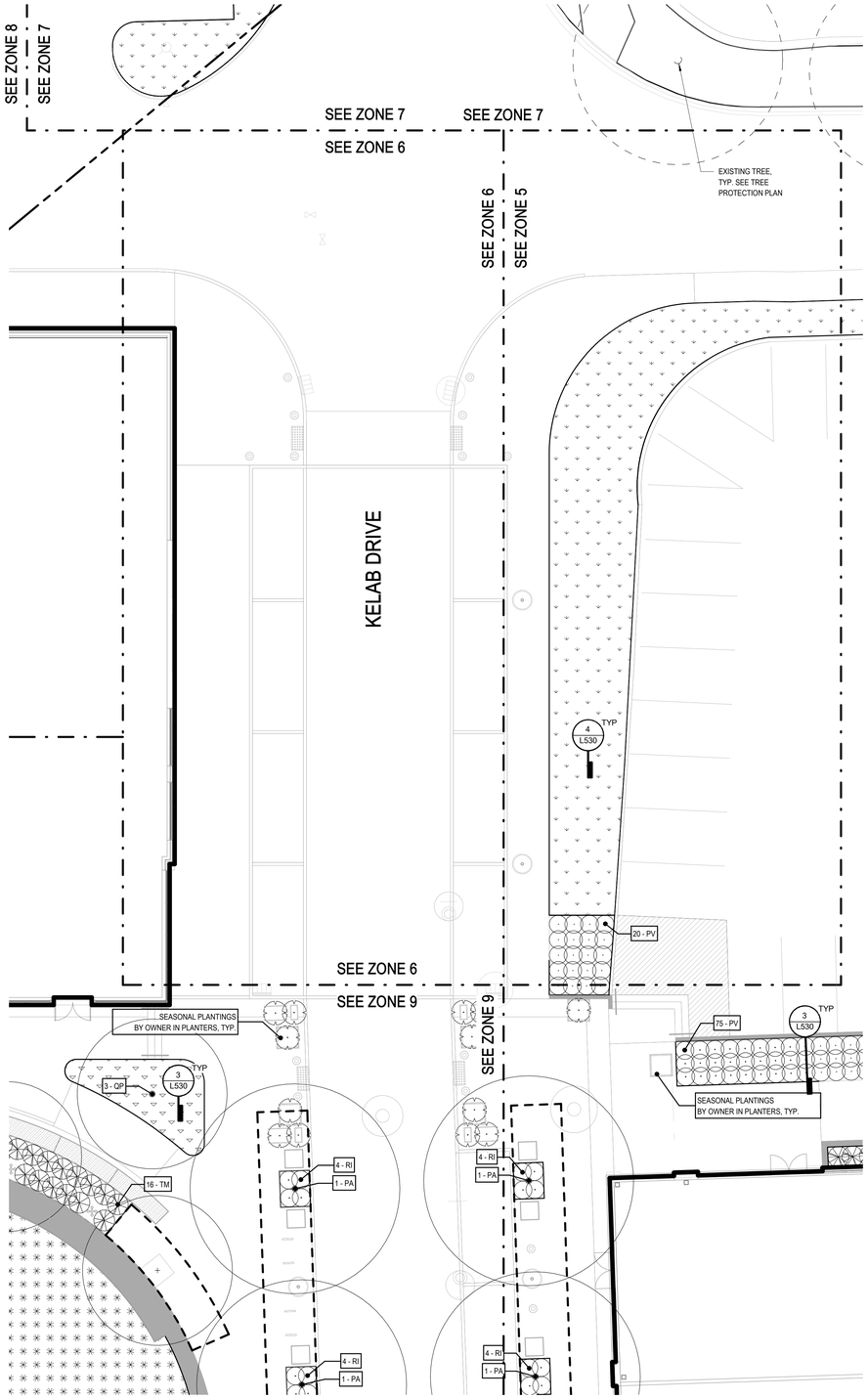

1 LANDSCAPE PLANTING PLAN - ZONE 6
1" = 10'-0"

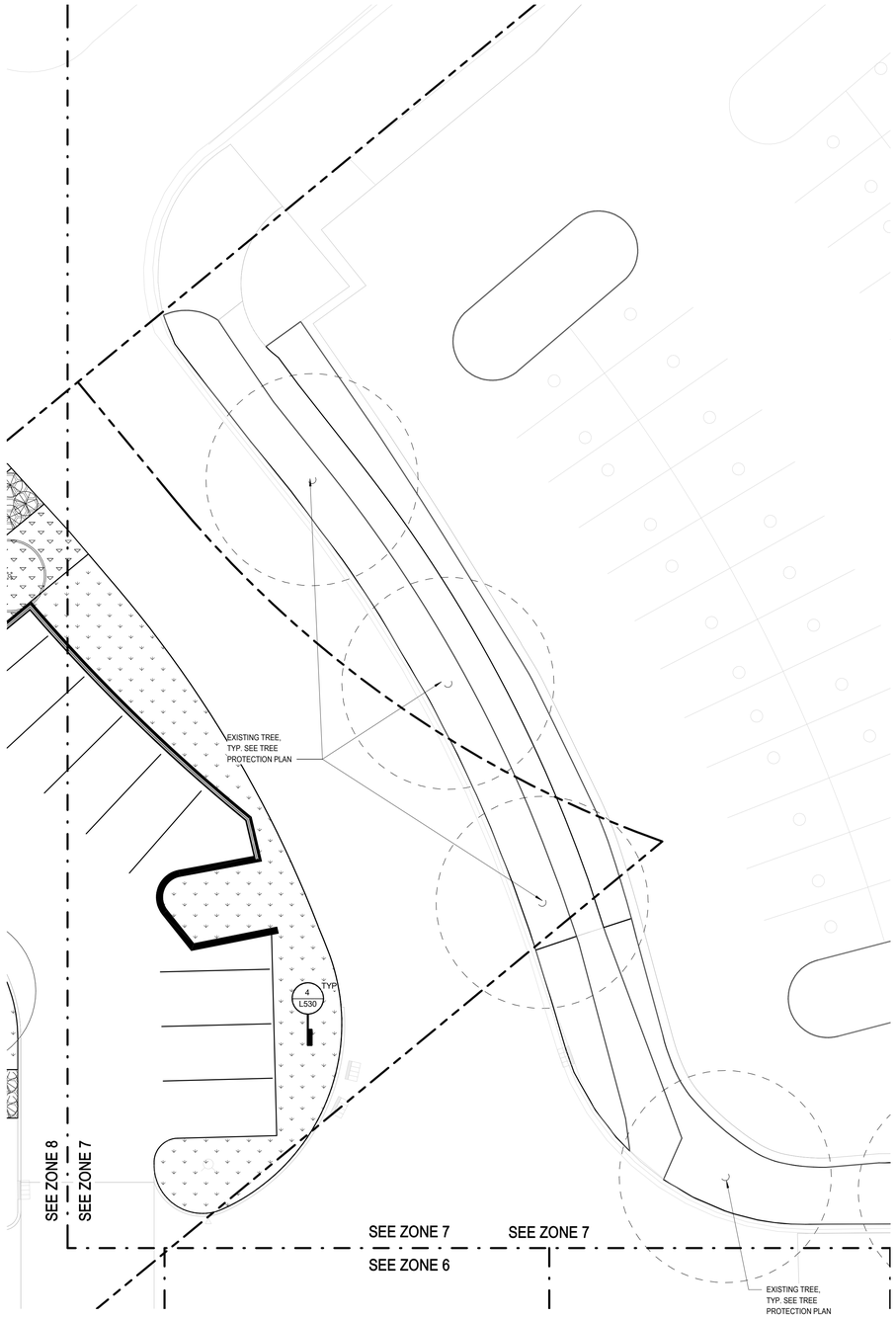

2 LANDSCAPE PLANTING PLAN - ZONE 7
1" = 10'-0"

DECIDUOUS TREES

AG — **AMELANCHIER x GRANDIFLORA**
'AUTUMN BRILLIANCE' SERVICEBERRY
- 6' HT. / MULTI-STEM
- CONDITION: B+B
- MATCHED SPECIMEN
- TAGGED BY LANDSCAPE ARCHITECT

AR — **ACER RUBRUM 'FRANK JR' REDPOINTE**
REDPOINT MAPLE
- SIZE: 4" CAL.
- CONDITION: B+B
- MATCHED SPECIMEN
- TAGGED BY LANDSCAPE ARCHITECT

BN — **BETULA NIGRA**
RIVER BIRCH
- SIZE: 3" CAL.
- CONDITION: B+B
- MATCHED SPECIMEN
- TAGGED BY LANDSCAPE ARCHITECT

GT — **GLEDITSIA TRIACANTHOS F. INERMIS**
THORNLESS HONEYLOCUST
- SIZE: 3" CAL.
- CONDITION: B+B
- MATCHED SPECIMEN
- TAGGED BY LANDSCAPE ARCHITECT

PA — **PLATANUS X ACERIFOLIA 'MORTON CIRCLE'**
'EXCLAMATION' LONDON PLANE
- SIZE: 5" CAL.
- CONDITION: B+B
- MATCHED SPECIMEN
- TAGGED BY LANDSCAPE ARCHITECT

QP — **QUERCUS PALUSTRIS**
PIN OAK
- SIZE: 5" CAL.
- CONDITION: B+B
- MATCHED SPECIMEN
- TAGGED BY LANDSCAPE ARCHITECT

ZS — **ZELKOVA SERRATA 'GREEN VASE'**
- JAPANESE ZELKOVA
- SIZE: 5" CAL.
- CONDITION: B+B
- MATCHED SPECIMEN
- TAGGED BY LANDSCAPE ARCHITECT

EVERGREEN TREES

JUNIPERUS CHINENSIS 'SPARTAN'
- UPRIGHT JUNIPER
- SIZE: 6-7'
- CONDITION: B+B
- MATCHED SPECIMEN
- TAGGED BY LANDSCAPE ARCHITECT

SHRUBS

GV — **BUXUS 'GREEN VELVET'**
'GREEN VELVET' BOXWOOD
- SIZE: 18-24"
- CONDITION: B+B
- NATURAL FORM

IG — **ILEX GLABRA 'CHAMZIN'**
NORDIC INKBERRY
- SIZE: 15-18"
- CONDITION: NO. 3 CONT.
- NATURAL FORM

RA — **RHUS AROMATICA 'GRO-LOW'**
FRAGRANT SUMAC
- SIZE: 18-24"
- CONDITION: NO. 3 CONT.

RI — **RIBES ALPINUM**
ALPINE CURRANT
- SIZE: 18-24"
- CONDITION: NO. 5 CONT.

TM — **TAXUS MEDIA 'DENSIFORMIS'**
DENSIFORMIS YEW
- SIZE: 24-36"
- CONDITION: NO. 5 CONT.
- MATCHED SPECIMEN

PERENNIALS + GRASSES

AG — **BOUTELOUA GRACILIS**
- 'BLONDE AMBITION' GRASS
- SIZE: NO. 2 CONT.
- MATCHED SOURCE

CA — **CALAMAGROSTIS ACUTIFLORA**
- KARL FOERSTER REED GRASS
- SIZE: NO. 2 CONT.
- MATCHED SOURCE

PV — **PANICUM VIRGATUM 'SHENANDOAH'**
- SHENANDOAH SWITCH GRASS
- SIZE: NO. 2 CONT.
- MATCHED SOURCE

GROUND COVERS

PT — **PARTHENOCISSUS TRICUSPIDATA 'VEITCHII'**
BOSTON IVY
- SIZE: NO. 2 CONT.
- SPACING: AS SHOWN

ORNAMENTAL GRASSES MIX
- SIZE: NO. 2 CONT.
- SPACING: TRI, 18" O.C.

VINCA MINOR
PERIWINKLE
- SIZE: NO. 1 CONT.
- SPACING: TRI, 12" O.C.

LAWN
- SOD

LAWN, ARTIFICIAL
- MFR: XGRASS
- PREMIER NATURAL

EXTENTS OF SUSPENDED PAVEMENT SYSTEM
- SEE L179 FOR ADDITIONAL DETAILS

SCALE: 1" = 10'-0"
0' 5' 10' 20'

TO OBTAIN LOCATION OF PARTICIPATING UNDERGROUND FACILITIES BEFORE YOU DIG IN WISCONSIN
CALL DIGGERS HOTLINE
1-800-242-8511
TOLL FREE
WIS. STATUTE 182.0175 (1974) REQUIRES MIN. OF 3 WORK DAYS NOTICE BEFORE YOU EXCAVATE

REALM COLLABORATIVE
100 E BROAD STREET
SUITE 1710
COLUMBUS, OHIO 43215
PHONE 614.670.7390
www.REALMCOLLABORATIVE.com

PROJECT INFORMATION

WS Hilldale Phase 3

HILLDALE
MADISON

702 N Midvale Blvd
Madison, WI 53705

ISSUANCE AND REVISIONS

DATE	DESCRIPTION
03/13/2023	CITY SUBMITTAL

KEY PLAN

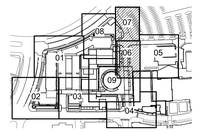

SHEET INFORMATION

PROGRESS DOCUMENTS NOT FOR CONSTRUCTION

These documents reflect progress and intent and may be subject to change, including additional detail. These are not final construction documents and shall not be used for final bidding or construction-related purposes.

PROJECT MANAGER	REALM
PROJECT NUMBER	2021-03

LANDSCAPE PLAN - ZONE 6 + 7

L176

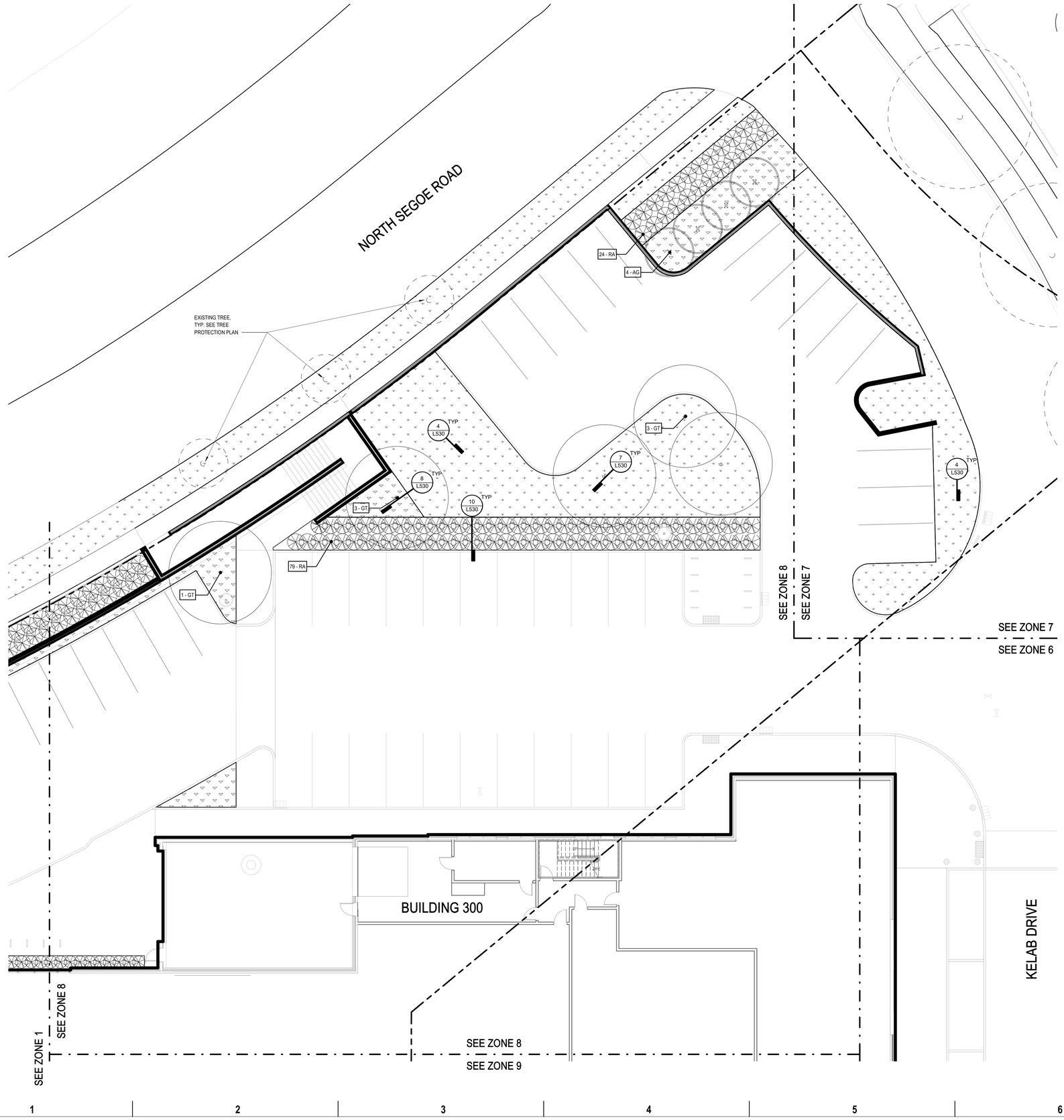

DECIDUOUS TREES

AG — **AMELANCHIER × GRANDIFLORA**
'AUTUMN BRILLIANCE' SERVICEBERRY
- 6' HT. / MULTI-STEM
- CONDITION: B+B
- MATCHED SPECIMEN
- TAGGED BY LANDSCAPE ARCHITECT

AR — **ACER RUBRUM 'FRANK JR' REDPOINTE**
REDPOINT MAPLE
- SIZE: 4" CAL.
- CONDITION: B+B
- MATCHED SPECIMEN
- TAGGED BY LANDSCAPE ARCHITECT

BN — **BETULA NIGRA**
RIVER BIRCH
- SIZE: 3" CAL.
- CONDITION: B+B
- MATCHED SPECIMEN
- TAGGED BY LANDSCAPE ARCHITECT

GT — **GLEDITSIA TRIACANTHOS F. INERMIS**
THORNLESS HONEYLOCUST
- SIZE: 3" CAL.
- CONDITION: B+B
- MATCHED SPECIMEN
- TAGGED BY LANDSCAPE ARCHITECT

PA — **PLATANUS X ACERIFOLIA 'MORTON CIRCLE'**
'EXCLAMATION' LONDON PLANE
- SIZE: 5" CAL.
- CONDITION: B+B
- MATCHED SPECIMEN
- TAGGED BY LANDSCAPE ARCHITECT

QP — **QUERCUS PALUSTRIS**
PIN OAK
- SIZE: 5" CAL.
- CONDITION: B+B
- MATCHED SPECIMEN
- TAGGED BY LANDSCAPE ARCHITECT

ZS — **ZELKOVA SERRATA 'GREEN VASE'**
- JAPANESE ZELKOVA
- SIZE: 5" CAL.
- CONDITION: B+B
- MATCHED SPECIMEN
- TAGGED BY LANDSCAPE ARCHITECT

EVERGREEN TREES

JUNIPERUS CHINENSIS 'SPARTAN'
- UPRIGHT JUNIPER
- SIZE: 6-7'
- CONDITION: B+B
- MATCHED SPECIMEN
- TAGGED BY LANDSCAPE ARCHITECT

SHRUBS

GV — **BUXUS 'GREEN VELVET'**
'GREEN VELVET' BOXWOOD
- SIZE: 18-24"
- CONDITION: B+B
- NATURAL FORM

IG — **ILEX GLABRA 'CHAMZIN'**
NORDIC INKBERRY
- SIZE: 15-18"
- CONDITION: NO. 3 CONT.
- NATURAL FORM

RA — **RHUS AROMATICA 'GRO-LOW'**
FRAGRANT SUMAC
- SIZE: 18-24"
- CONDITION: NO. 3 CONT.

RI — **RIBES ALPINUM**
ALPINE CURRANT
- SIZE: 18-24"
- CONDITION: NO. 5 CONT.

TM — **TAXUS MEDIA 'DENSIFORMIS'**
DENSIFORMIS YEW
- SIZE: 24-36"
- CONDITION: NO. 5 CONT.
- MATCHED SPECIMEN

PERENNIALS + GRASSES

AG — **BOUTELOUA GRACILIS**
- 'BLONDE AMBITION' GRASS
- SIZE: NO. 2 CONT.
- MATCHED SOURCE

CA — **CALAMAGROSTIS ACUTIFLORA**
- KARL FOERSTER REED GRASS
- SIZE: NO. 2 CONT.
- MATCHED SOURCE

PV — **PANICUM VIRGATUM 'SHENANDOAH'**
- SHENANDOAH SWITCH GRASS
- SIZE: NO. 2 CONT.
- MATCHED SOURCE

GROUND COVERS

PT — **PARTHENOCISSUS TRICUSPIDATA 'VEITCHII'**
BOSTON IVY
- SIZE: NO. 2 CONT.
- SPACING: AS SHOWN

ORNAMENTAL GRASSES MIX
- SIZE: NO. 2 CONT.
- SPACING: TRI, 18" O.C.

VINCA MINOR
PERIWINKLE
- SIZE: NO. 1 CONT.
- SPACING: TRI, 12" O.C.

LAWN
- SOD

LAWN, ARTIFICIAL
- MFR: XGRASS
- PREMIER NATURAL

EXTENTS OF SUSPENDED PAVEMENT SYSTEM
- SEE L179 FOR ADDITIONAL DETAILS

SCALE: 1" = 10'-0"
0' 5' 10' 20'

TO OBTAIN LOCATION OF PARTICIPATING UNDERGROUND FACILITIES BEFORE YOU DIG IN WISCONSIN
CALL DIGGERS HOTLINE
1-800-242-8511
TOLL FREE
WIS. STATUTE 182.0175 (1974) REQUIRES MIN. OF 3 WORK DAYS NOTICE BEFORE YOU EXCAVATE.

REALM COLLABORATIVE
100 E BROAD STREET
SUITE 1710
COLUMBUS, OHIO 43215
PHONE 614.670.7390
www.REALMCOLLABORATIVE.com

PROJECT INFORMATION

WS Hilldale Phase 3

HILLDALE
MADISON

702 N Midvale Blvd
Madison, WI 53705

ISSUANCE AND REVISIONS

DATE	DESCRIPTION
03/13/2023	CITY SUBMITTAL

KEY PLAN

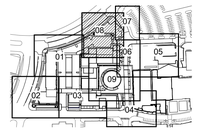

SHEET INFORMATION

PROGRESS DOCUMENTS NOT FOR CONSTRUCTION

These documents reflect progress and intent and may be subject to change, including additional detail. These are not final construction documents and shall not be used for final bidding or construction-related purposes.

PROJECT MANAGER	REALM
PROJECT NUMBER	2021-03

LANDSCAPE PLAN - ZONE 8

L177

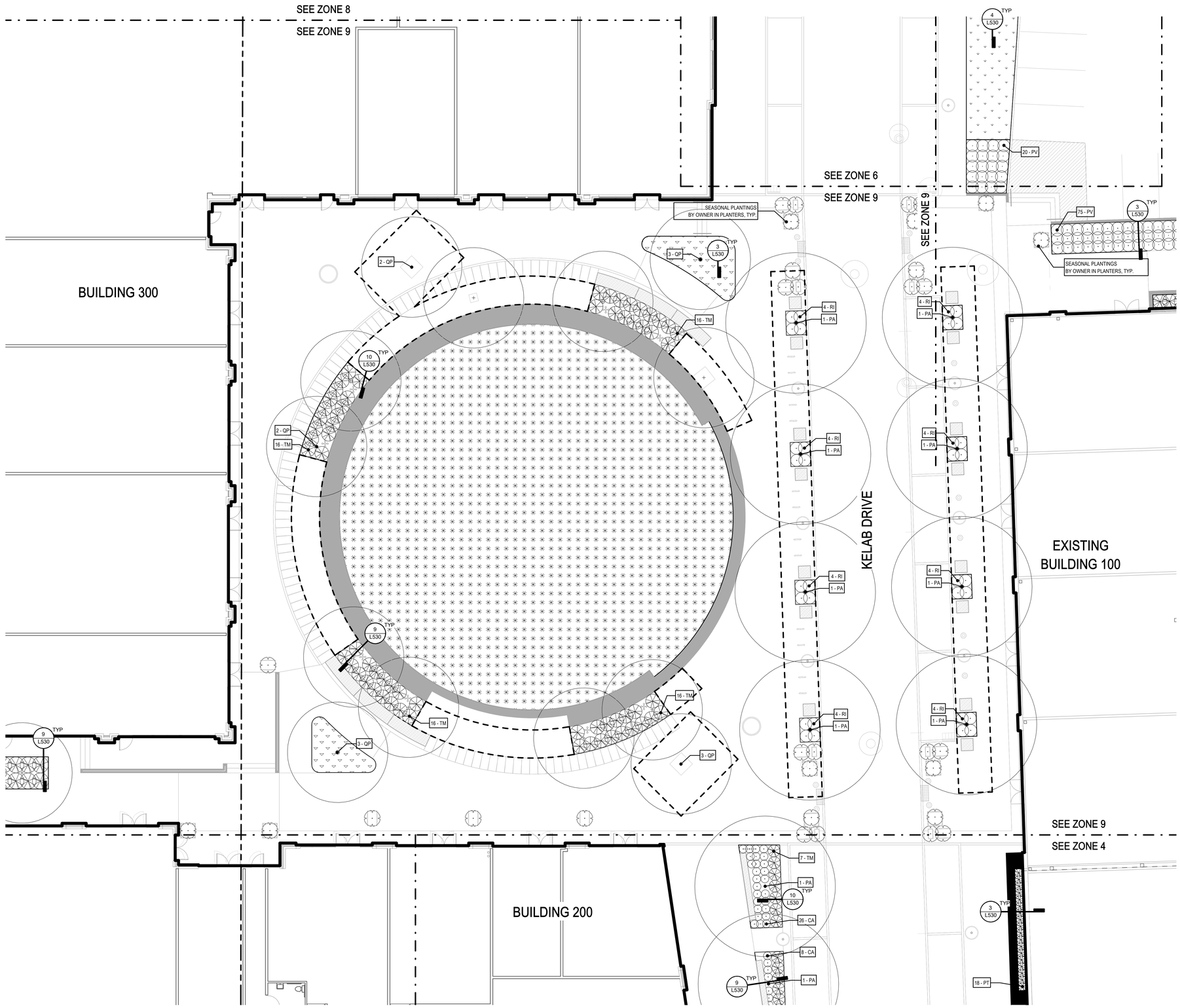

SCALE: 1" = 10'-0"

0' 5' 10' 20'

TO OBTAIN LOCATION OF PARTICIPANTS' UNDERGROUND FACILITIES BEFORE YOU DIG IN WISCONSIN
CALL DIGGERS HOTLINE
1-800-242-8511
TOLL FREE
WIS. STATUTE 182.0175 (1974) REQUIRES YOU TO GIVE THIS NOTICE BEFORE YOU EXCAVATE

DECIDUOUS TREES

AG	**AMELANCHIER × GRANDIFLORA** 'AUTUMN BRILLIANCE' SERVICEBERRY	- 6' HT. / MULTI-STEM - CONDITION: B+B - MATCHED SPECIMEN - TAGGED BY LANDSCAPE ARCHITECT
AR	**ACER RUBRUM 'FRANK JR' REDPOINTE** REDPOINT MAPLE	- SIZE: 4" CAL. - CONDITION: B+B - MATCHED SPECIMEN - TAGGED BY LANDSCAPE ARCHITECT
BN	**BETULA NIGRA** RIVER BIRCH	- SIZE: 3" CAL. - CONDITION: B+B - MATCHED SPECIMEN - TAGGED BY LANDSCAPE ARCHITECT
GT	**GLEDITSIA TRIACANTHOS F. INERMIS** THORNLESS HONEYLOCUST	- SIZE: 3" CAL. - CONDITION: B+B - MATCHED SPECIMEN - TAGGED BY LANDSCAPE ARCHITECT
PA	**PLATANUS X ACERIFOLIA 'MORTON CIRCLE'** 'EXCLAMATION' LONDON PLANE	- SIZE: 5" CAL. - CONDITION: B+B - MATCHED SPECIMEN - TAGGED BY LANDSCAPE ARCHITECT
QP	**QUERCUS PALUSTRIS** PIN OAK	- SIZE: 5" CAL. - CONDITION: B+B - MATCHED SPECIMEN - TAGGED BY LANDSCAPE ARCHITECT
ZS	**ZELKOVA SERRATA 'GREEN VASE'**	- JAPANESE ZELKOVA - SIZE: 5" CAL. - CONDITION: B+B - MATCHED SPECIMEN - TAGGED BY LANDSCAPE ARCHITECT

EVERGREEN TREES

	JUNIPERUS CHINENSIS 'SPARTAN'	- UPRIGHT JUNIPER - SIZE: 6-7' - CONDITION: B+B - MATCHED SPECIMEN - TAGGED BY LANDSCAPE ARCHITECT

SHRUBS

GV	**BUXUS 'GREEN VELVET'** 'GREEN VELVET' BOXWOOD	- SIZE: 18-24" - CONDITION: B+B - NATURAL FORM
IG	**ILEX GLABRA 'CHAMZIN'** NORDIC INKBERRY	- SIZE: 15-18" - CONDITION: NO. 3 CONT. - NATURAL FORM
RA	**RHUS AROMATICA 'GRO-LOW'** FRAGRANT SUMAC	- SIZE: 18-24" - CONDITION: NO. 3 CONT.
RI	**RIBES ALPINUM** ALPINE CURRANT	- SIZE: 18-24" - CONDITION: NO. 5 CONT.
TM	**TAXUS MEDIA 'DENSIFORMIS'** DENSIFORMIS YEW	- SIZE: 24-36" - CONDITION: NO. 5 CONT. - MATCHED SPECIMEN

PERENNIALS + GRASSES

AG	**BOUTELOUA GRACILIS** - 'BLONDE AMBITION' GRASS	- SIZE: NO. 2 CONT. - MATCHED SOURCE
CA	**CALAMAGROSTIS ACUTIFLORA** - KARL FOERSTER REED GRASS	- SIZE: NO. 2 CONT. - MATCHED SOURCE
PV	**PANICUM VIRGATUM 'SHENANDOAH'** - SHENANDOAH SWITCH GRASS	- SIZE: NO. 2 CONT. - MATCHED SOURCE

GROUND COVERS

PT	**PARTHENOCISSUS TRICUSPIDATA 'VEITCHII'** BOSTON IVY	- SIZE: NO. 2 CONT. - SPACING: AS SHOWN
	ORNAMENTAL GRASSES MIX	- SIZE: NO. 2 CONT. - SPACING: TRI, 18" O.C.
	VINCA MINOR PERIWINKLE	- SIZE: NO. 1 CONT. - SPACING: TRI, 12" O.C.
	LAWN	- SOD
	LAWN, ARTIFICIAL	- MFR: XGRASS - PREMIER NATURAL
	EXTENTS OF SUSPENDED PAVEMENT SYSTEM	- SEE L179 FOR ADDITIONAL DETAILS

REALM COLLABORATIVE
100 E BROAD STREET
SUITE 1710
COLUMBUS, OHIO 43215
PHONE 614.670.7390
www.REALMCOLLABORATIVE.com

PROJECT INFORMATION

WS Hilldale Phase 3

HILLDALE MADISON

702 N Midvale Blvd
Madison, WI 53705

ISSUANCE AND REVISIONS

DATE	DESCRIPTION
03/13/2023	CITY SUBMITTAL

KEY PLAN

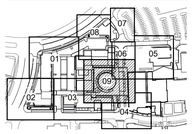

SHEET INFORMATION

PROGRESS DOCUMENTS NOT FOR CONSTRUCTION

These documents reflect progress and intent and may be subject to change, including additional detail. These are not final construction documents and shall not be used for final bidding or construction-related purposes.

PROJECT MANAGER	REALM
PROJECT NUMBER	2021-03

LANDSCAPE PLAN - ZONE 9

L178

BUILDING 300

BUILDING 200

KELAB DRIVE

KELAB DRIVE

EXISTING BUILDING 100

PRICE PLACE

8 L501 TYP.

9 L501 TYP.

(1) UNIT FIELD EXAMPLE

GREENBLUE URBAN ROOTSPACE
- SUSPENDED PAVEMENT SOIL SYSTEM
- PRODUCT: ROOTSPACE 600 (24")
- 1 UNITS STACKED PER PLAN LOCATION
- MFR: GREENBLUE URBAN
- PLANTING MIX PER GREENBLUE

SCALE: 1" = 10'-0"

0' 5' 10' 20'

TO OBTAIN LOCATION OF PARTICIPANTS' UNDERGROUND FACILITIES BEFORE YOU DIG IN WISCONSIN

CALL DIGGERS HOTLINE
1-800-242-8511
TOLL FREE

WIS. STATUTE 182.0175 (1974M) REQUIRES WIS. UF 2 WORK DAYS NOTICE BEFORE YOU EXCAVATE

REALM COLLABORATIVE

100 E BROAD STREET
SUITE 1710
COLUMBUS, OHIO 43215
PHONE 614.670.7390
www.REALMCOLLABORATIVE.com

PROJECT INFORMATION

WS Hilldale Phase 3

HILLDALE
MADISON

702 N Midvale Blvd
Madison, WI 53705

ISSUANCE AND REVISIONS

DATE	DESCRIPTION

KEY PLAN

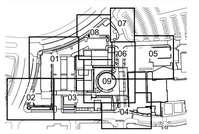

SHEET INFORMATION

PROGRESS DOCUMENTS NOT FOR CONSTRUCTION

These documents reflect progress and intent and may be subject to change, including additional detail. These are not final construction documents and shall not be used for final bidding or construction-related purposes.

PROJECT MANAGER	REALM
PROJECT NUMBER	2021-03

LANDSCAPE PLAN - SUSPENDED PAVEMENT

L179

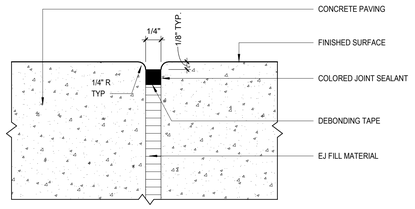

12 EXPANSION JOINT @ PEDESTRIAN PAVEMENT SEALANT
12" = 1'-0"

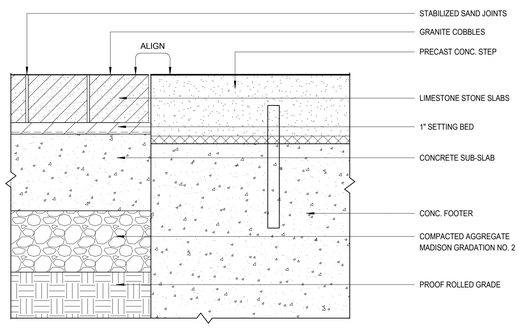

11 COBBLE PAVERS - TRANSITION AT PRECAST STEPS
3" = 1'-0"

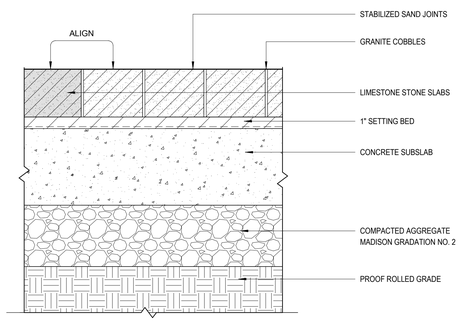

10 COBBLE PAVERS - TRANSITION AT STONE SLAB
3" = 1'-0"

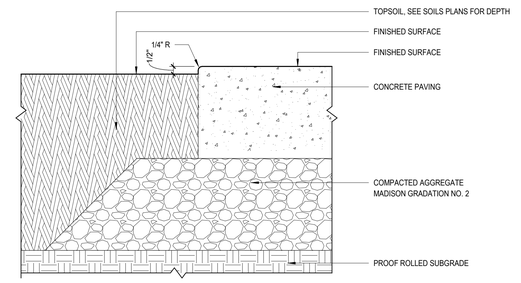

9 CONCRETE PAVEMENT EDGE @ LAWN
3" = 1'-0"

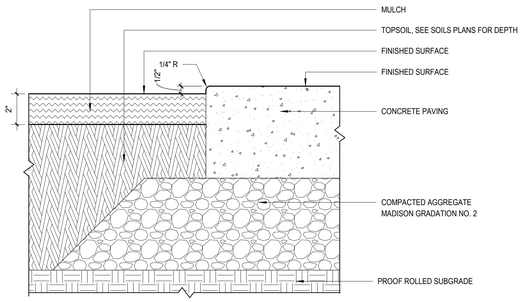

8 CONCRETE PAVEMENT EDGE @ MULCH
3" = 1'-0"

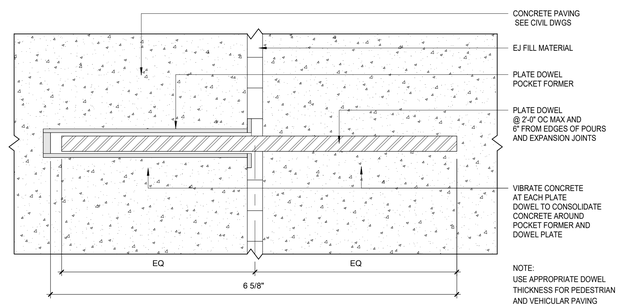

7 PLATE DOWEL AT NEW CONCRETE PAVEMENT
12" = 1'-0"

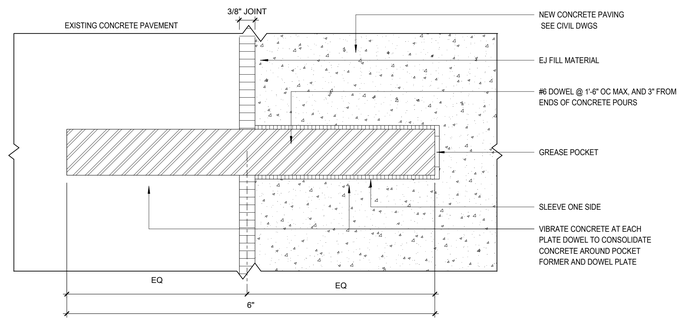

6 ROUND DOWEL EJ AT NEW AND EXISTING CONCRETE PAVEMENT
12" = 1'-0"

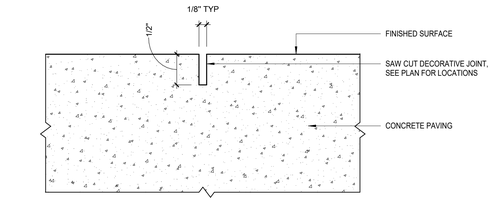

5 CONCRETE - SAW-CUT DECORATIVE JOINT (DJ)
12" = 1'-0"

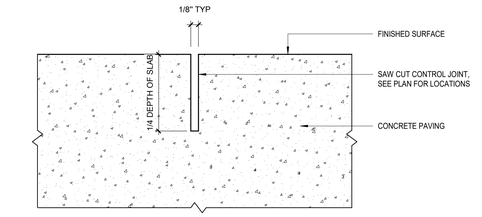

4 CONCRETE - SAW CUT CONTROL JOINT (SCJ)
12" = 1'-0"

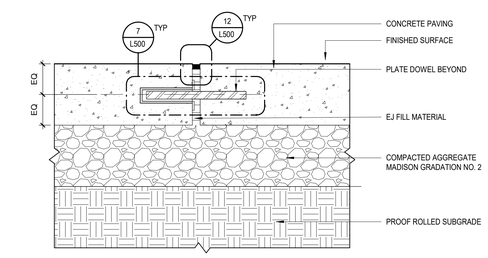

3 CONCRETE EXPANSION JOINT
3" = 1'-0"

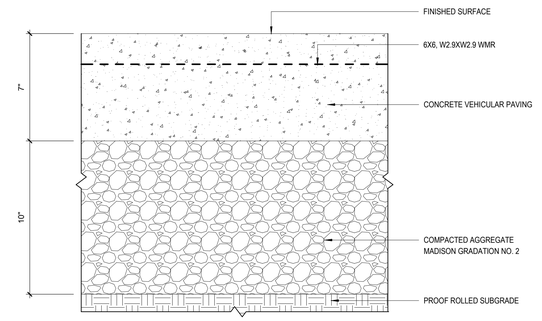

2 CONCRETE PAVING - VEHICULAR / LOADING
3" = 1'-0"

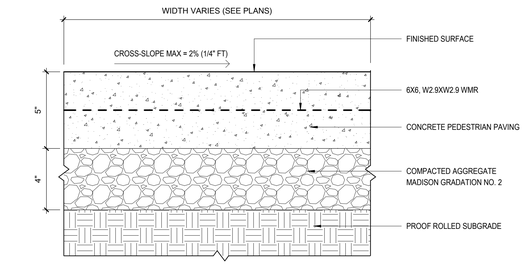

1 CONCRETE PAVING - PEDESTRIAN
3" = 1'-0"

811
TO OBTAIN LOCATION OF UNDERGROUND UTILITY-OWNED FACILITIES BEFORE YOU DIG IN WISCONSIN
CALL DIGGERS HOTLINE
1-800-242-8511
TOLL FREE
WIS. STATUTE 182.0175 (1974) REQUIRES MIN. OF 3 WORK DAYS NOTICE BEFORE YOU EXCAVATE

REALM
COLLABORATIVE
100 E BROAD STREET
SUITE 1710
COLUMBUS, OHIO 43215
PHONE 614.670.7390
www.REALMCOLLABORATIVE.com

PROJECT INFORMATION

WS Hilldale Phase 3

HILLDALE
MADISON

702 N Midvale Blvd
Madison, WI 53705

ISSUANCE AND REVISIONS

DATE	DESCRIPTION
03/13/2023	CITY SUBMITTAL

KEY PLAN

SHEET INFORMATION

PROGRESS DOCUMENTS NOT FOR CONSTRUCTION

These documents reflect progress and intent and may be subject to change, including additional detail. These are not final construction documents and shall not be used for final bidding or construction-related purposes.

PROJECT MANAGER	REALM
PROJECT NUMBER	2021-03

LANDSCAPE PAVEMENT DETAILS

L500

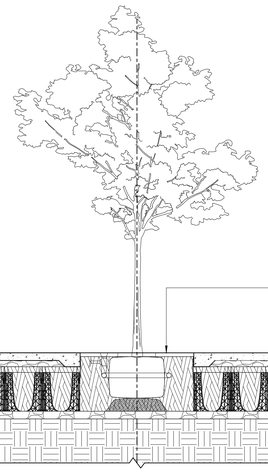

9 GREENBLUE URBAN SECTION
3/8" = 1'-0"

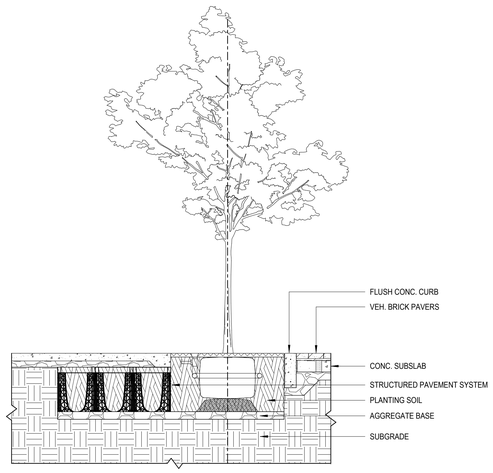

8 GREENBLUE URBAN TYPICAL SECTION @ CURB
3/8" = 1'-0"

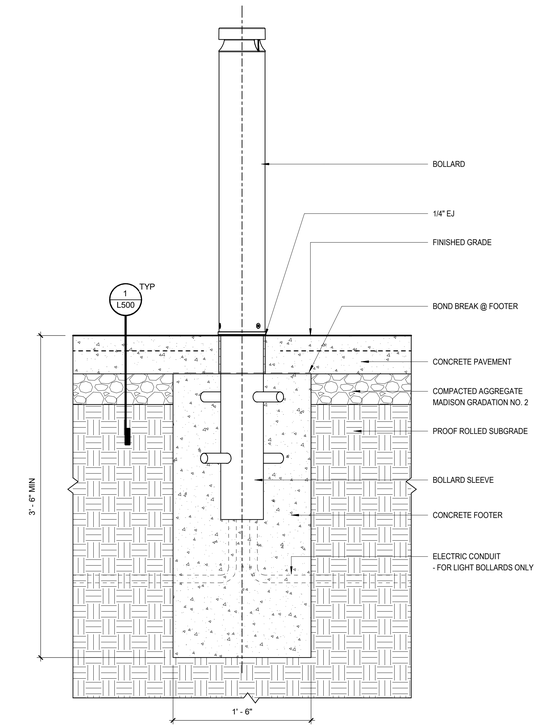

7 BOLLARDS - NON-LIGHT AND LIGHT BOLLARDS @ CONCRETE PAVEMENT
1 1/2" = 1'-0"

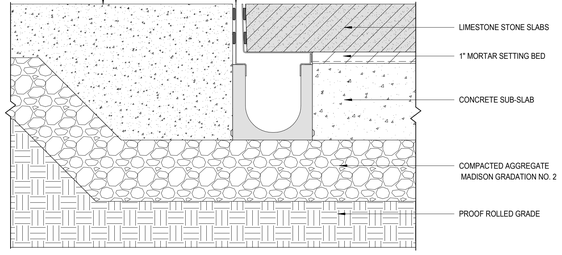

6 SECTION - RADIAL SLOT DRAIN
3" = 1'-0"

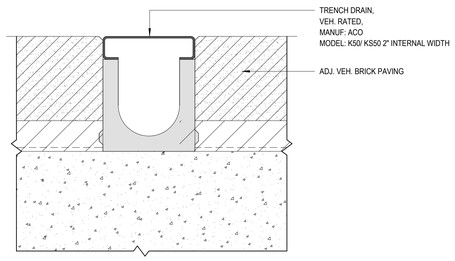

5 SECTION - VEHICULAR TRENCH DRAIN
6" = 1'-0"

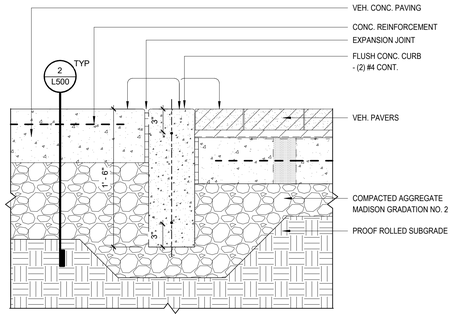

4 SECTION - VEH. CONC. CURB
1 1/2" = 1'-0"

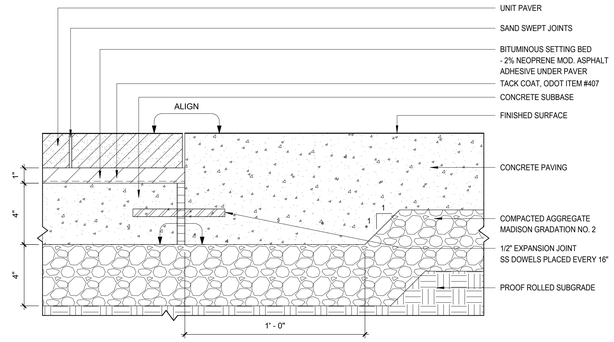

3 UNIT PAVING TRANSITION AT CONCRETE PAVEMENT
3" = 1'-0"

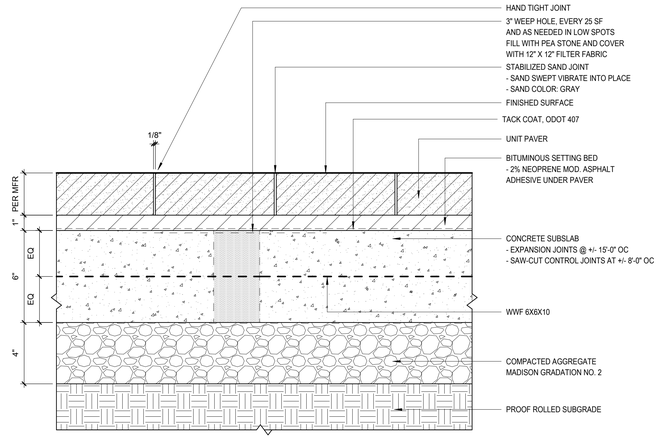

2 UNIT PAVING SECTION - VEHICULAR PAVING
3" = 1'-0"

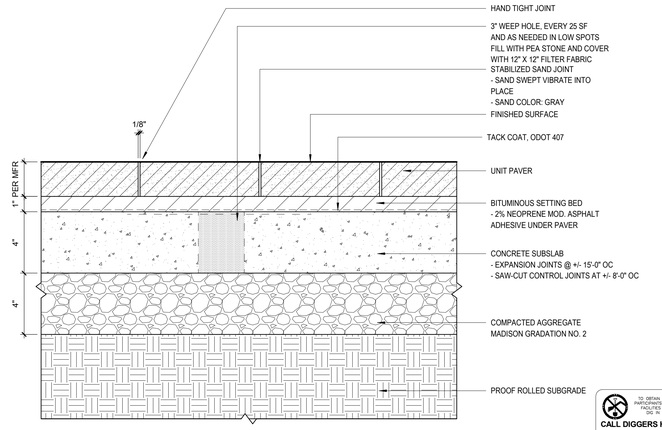

1 UNIT PAVING SECTION - PEDESTRIAN PAVING
3" = 1'-0"

TO OBTAIN LOCATION OF PARTICIPANTS' UNDERGROUND FACILITIES BEFORE YOU DIG IN WISCONSIN
CALL DIGGERS HOTLINE
1-800-242-8511
TOLL FREE
WIS. STATUTE 182.0175 (1974)
REQUIRES YOU TO CALL TWO WORKING DAYS BEFORE YOU EXCAVATE

REALM
COLLABORATIVE
100 E BROAD STREET
SUITE 1710
COLUMBUS, OHIO 43215
PHONE 614.670.7390
www.REALMCOLLABORATIVE.com

PROJECT INFORMATION

WS Hilldale Phase 3

HILLDALE
MADISON

702 N Midvale Blvd
Madison, WI 53705

ISSUANCE AND REVISIONS

DATE	DESCRIPTION
03/13/2023	CITY SUBMITTAL

KEY PLAN

SHEET INFORMATION

PROGRESS DOCUMENTS NOT FOR CONSTRUCTION

These documents reflect progress and intent and may be subject to change, including additional detail. These are not final construction documents and shall not be used for final bidding or construction-related purposes.

PROJECT MANAGER	REALM
PROJECT NUMBER	2021-03

LANDSCAPE PAVEMENT DETAILS

L501

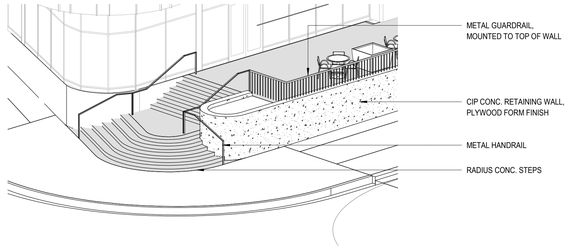

4 BLDG 500 CORNER ENTRY

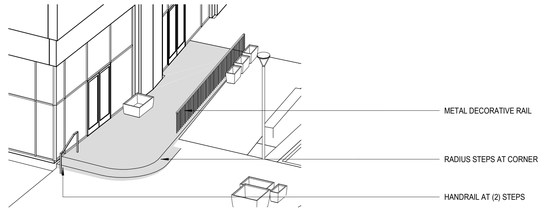

3 BLDG 300 CORNER TENANT

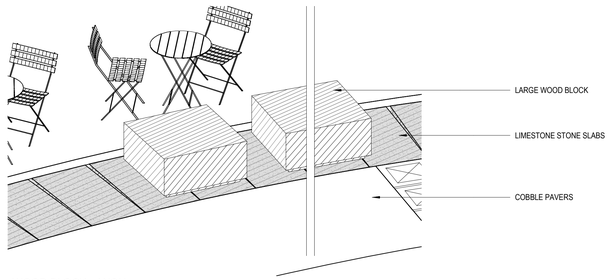

2 WOOD BLOCK - AXON

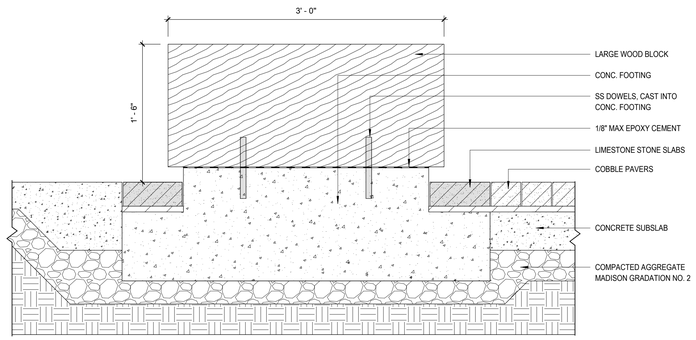

1 WOOD BLOCK SEATING - SECTION
1 1/2" = 1'-0"

REALM
COLLABORATIVE

100 E BROAD STREET
SUITE 1710
COLUMBUS, OHIO 43215
PHONE 614.670.7390
www.REALMCOLLABORATIVE.com

PROJECT INFORMATION

WS Hilldale Phase 3

HILLDALE
MADISON

702 N Midvale Blvd
Madison, WI 53705

ISSUANCE AND REVISIONS

DATE	DESCRIPTION
03/13/2023	CITY SUBMITTAL

KEY PLAN

SHEET INFORMATION

PROGRESS DOCUMENTS NOT FOR CONSTRUCTION

These documents reflect progress and intent and may be subject to change, including additional detail. These are not final construction documents and shall not be used for final bidding or construction-related purposes.

PROJECT MANAGER	REALM
PROJECT NUMBER	2021-03

LANDSCAPE ELEMENTS DETAILS

L510

TO OBTAIN LOCATION OF UNDERGROUND UTILITY FACILITIES BEFORE YOU DIG IN WISCONSIN
CALL DIGGERS HOTLINE
1-800-242-8511
TOLL FREE
WIS. STATUTE 182.0175 (1974) REQUIRES MIN. OF 3 WORK DAYS NOTICE BEFORE YOU EXCAVATE

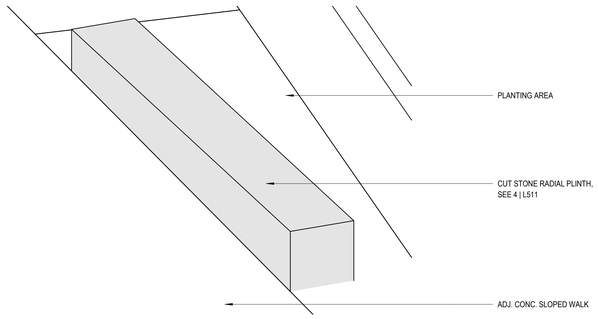

8 LIMESTONE PLINTH IN PLANTING - AXON

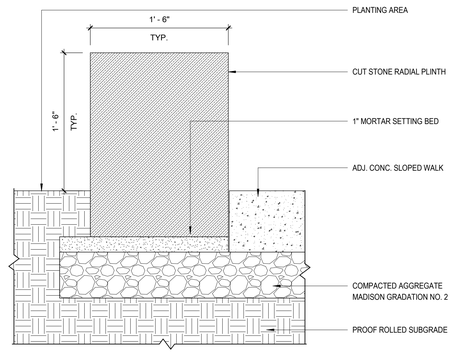

4 LIMESTONE PLINTH IN PLANTING - SECTION
1 1/2" = 1'-0"

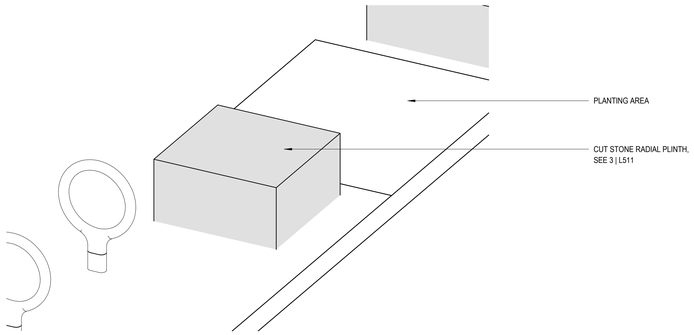

7 LIMESTONE CUBE - AXON

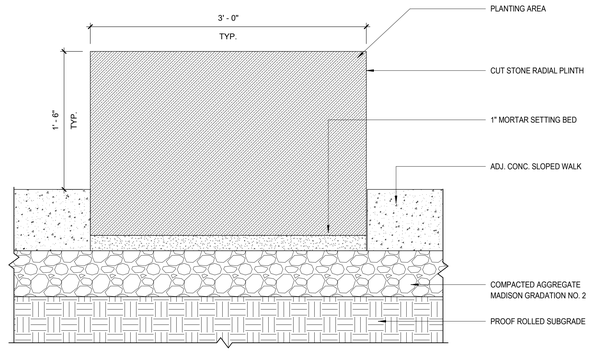

3 LIMESTONE CUBE - SECTION
1 1/2" = 1'-0"

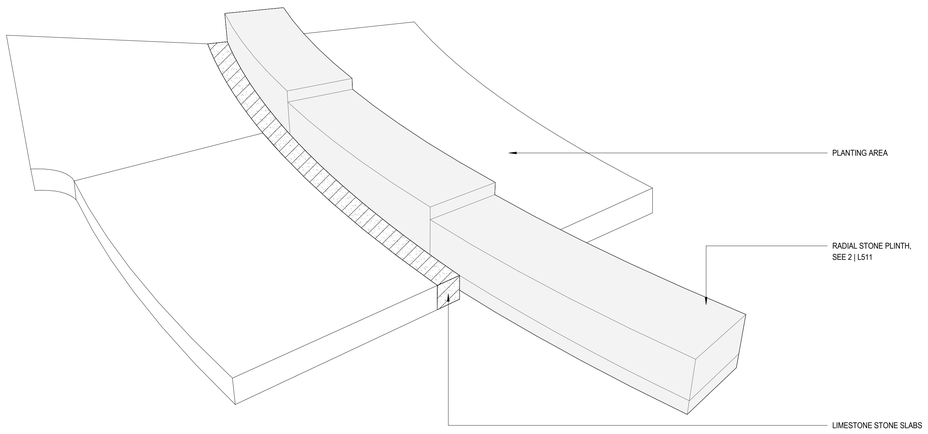

6 LIMESTONE RADIAL PLINTH - AXON
1/4" = 1'-0"

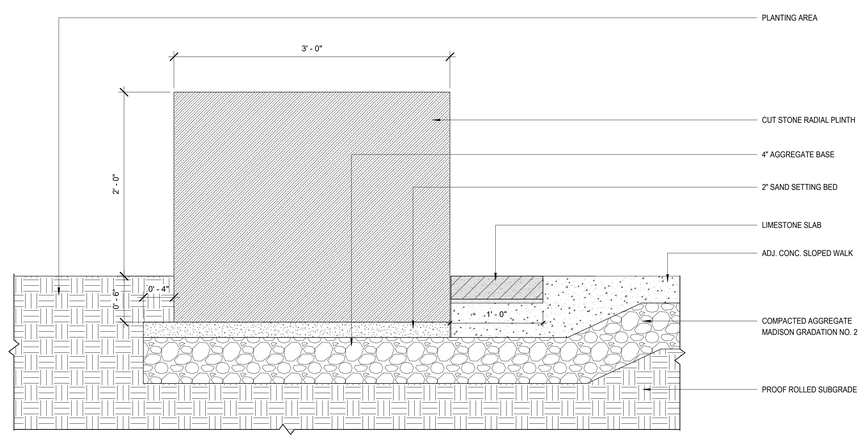

2 LIMESTONE RADIAL PLINTH - SECTION
1 1/2" = 1'-0"

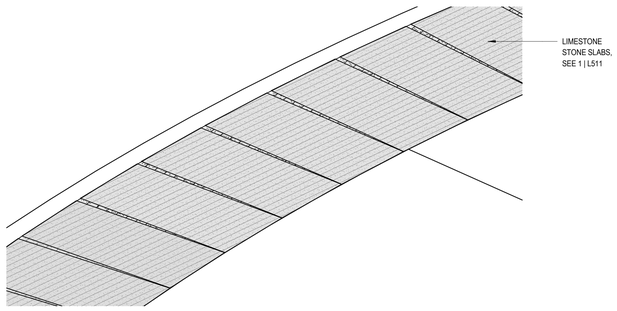

5 LIMESTONE RADIAL SLAB - AXON

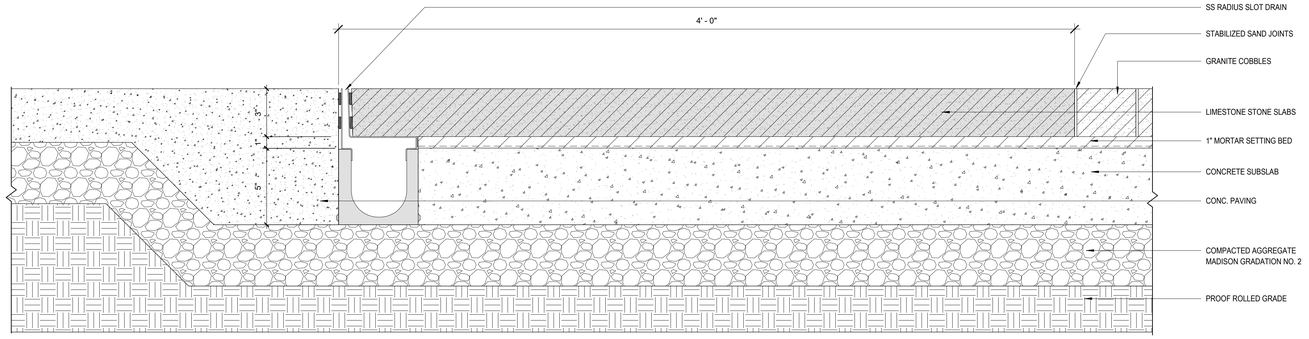

1 LIMESTONE SLAB -SECTION
3" = 1'-0"

TO OBTAIN LOCATION OF UNDERGROUND UTILITY FACILITIES BEFORE YOU DIG IN WISCONSIN
CALL DIGGERS HOTLINE
1-800-242-8511
TOLL FREE
WIS. STATUTE 182.0175 (1974) REQUIRES MIN. OF 3 WORK DAYS NOTICE BEFORE YOU EXCAVATE

REALM
COLLABORATIVE
100 E BROAD STREET
SUITE 1710
COLUMBUS, OHIO 43215
PHONE 614.670.7390
www.REALMCOLLABORATIVE.com

PROJECT INFORMATION

WS Hilldale Phase 3

HILLDALE
MADISON

702 N Midvale Blvd
Madison, WI 53705

ISSUANCE AND REVISIONS

DATE	DESCRIPTION
03/13/2023	CITY SUBMITTAL

KEY PLAN

SHEET INFORMATION

PROGRESS DOCUMENTS NOT FOR CONSTRUCTION

These documents reflect progress and intent and may be subject to change, including additional detail. These are not final construction documents and shall not be used for final bidding or construction-related purposes.

PROJECT MANAGER	REALM
PROJECT NUMBER	2021-03

LANDSCAPE STONE DETAILS

L511

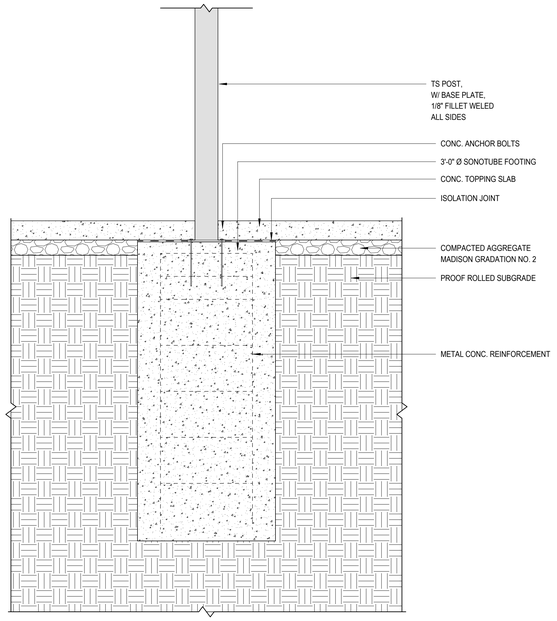

6 HILLDALE METAL FRAME FOOTING - SECTION
3/4" = 1'-0"

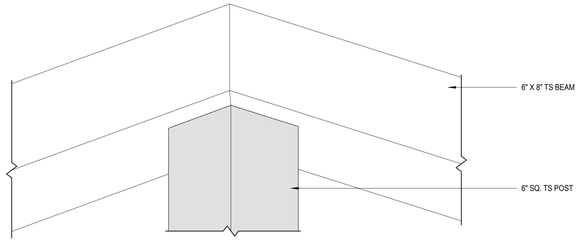

5 HILLDALE METAL FRAME BEAM AND POST CORNER - AXON
3" = 1'-0"

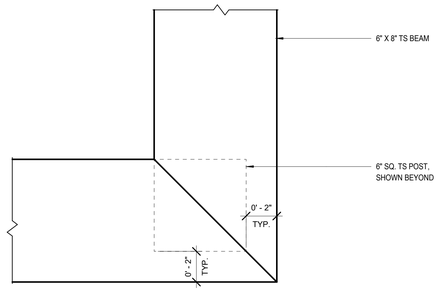

4 HILLDALE METAL FRAME BEAM - PLAN
3" = 1'-0"

3 HILLDALE METAL FRAME - AXON
1/8" = 1'-0"

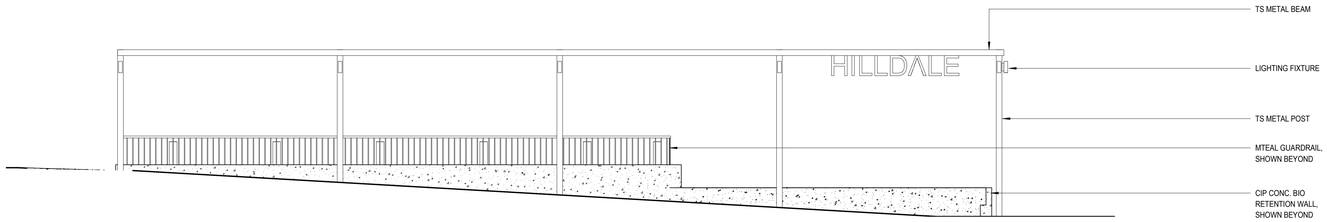

2 METAL HILLDALE FRAME - SOUTH ELEVATION
3/16" = 1'-0"

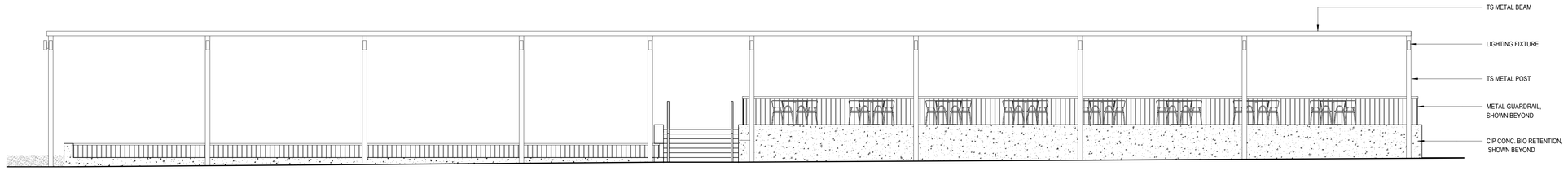

1 METAL HILLDALE FRAME - EAST ELEVATION
3/16" = 1'-0"

TO OBTAIN LOCATION OF PARTICIPANTS' UNDERGROUND FACILITIES BEFORE YOU DIG IN WISCONSIN
CALL DIGGERS HOTLINE
1-800-242-8511
TOLL FREE
WIS. STATUTE 182.0175 (1974) REQUIRES MIN. OF 3 WORK DAYS NOTICE BEFORE YOU EXCAVATE.

REALM
COLLABORATIVE
100 E BROAD STREET
SUITE 1710
COLUMBUS, OHIO 43215
PHONE 614.670.7390
www.REALMCOLLABORATIVE.com

PROJECT INFORMATION

WS Hilldale Phase 3

HILLDALE
MADISON

702 N Midvale Blvd
Madison, WI 53705

ISSUANCE AND REVISIONS

DATE	DESCRIPTION
03/13/2023	CITY SUBMITTAL

KEY PLAN

SHEET INFORMATION

PROGRESS DOCUMENTS NOT FOR CONSTRUCTION

These documents reflect progress and intent and may be subject to change, including additional detail. These are not final construction documents and shall not be used for final bidding or construction-related purposes.

PROJECT MANAGER	REALM
PROJECT NUMBER	2021-03

LANDSCAPE METAL FRAME DETAILS

L512

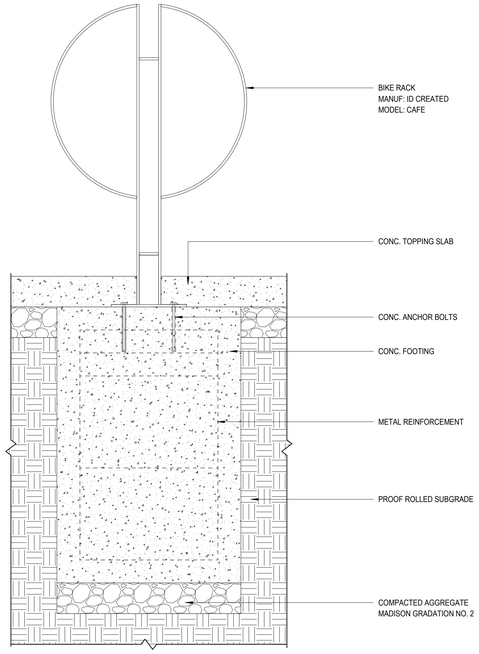

9 BIKE RACK - SECTION
1 1/2" = 1'-0"

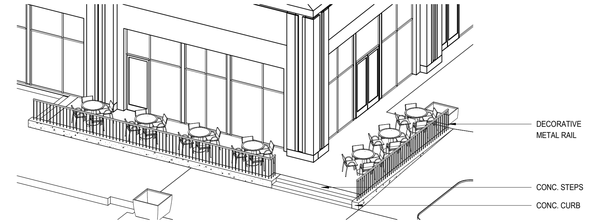

5 TERRACE SEATING - AXON

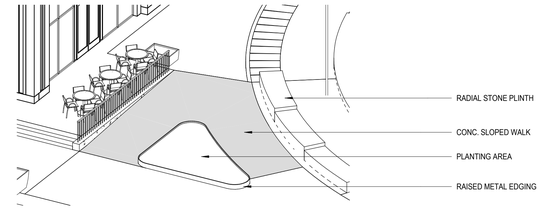

4 WALL TYPE 3 - PLANTER RAMP - AXON - VIEW 2

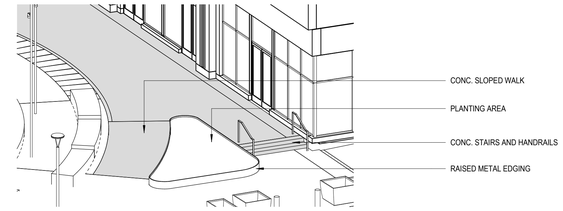

3 WALL TYPE 3 - PLANTER RAMP - AXON

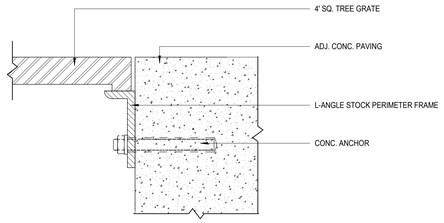

8 TREE GRATE - SECTION
6" = 1'-0"

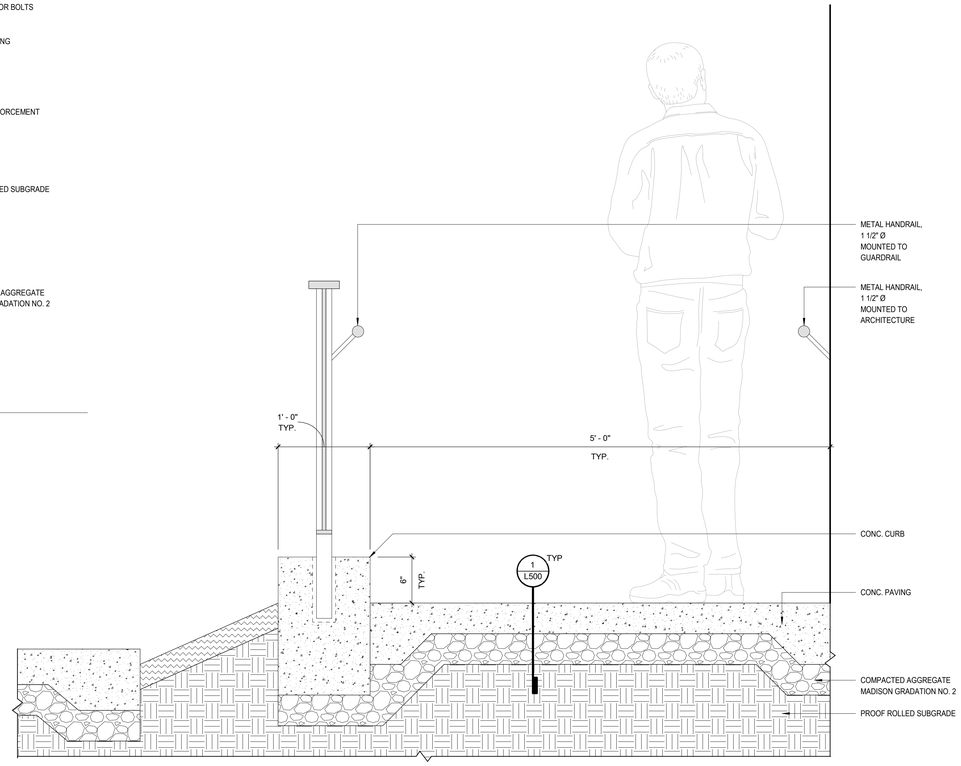

6 RAMP AND CURB - SECTION
1 1/2" = 1'-0"

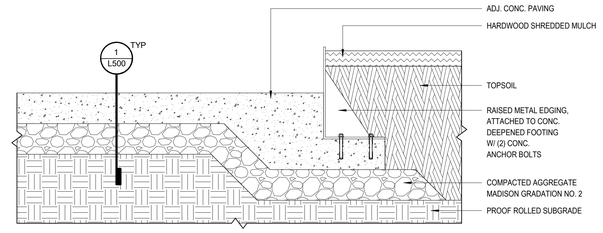

2 WALL TYPE C RAISED METAL EDGING AT PLANTER - SECTION
1 1/2" = 1'-0"

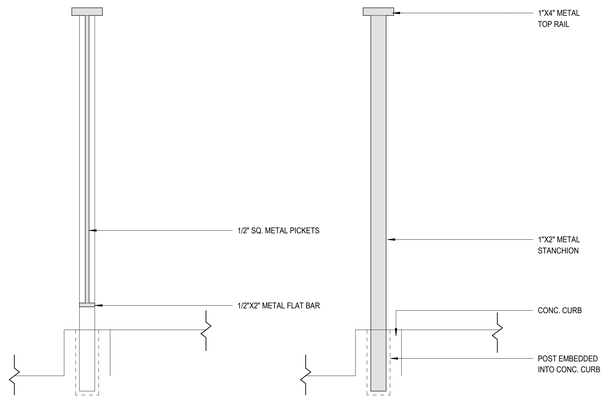

7 DECORATIVE GUARDRAIL - SECTION
1 1/2" = 1'-0"

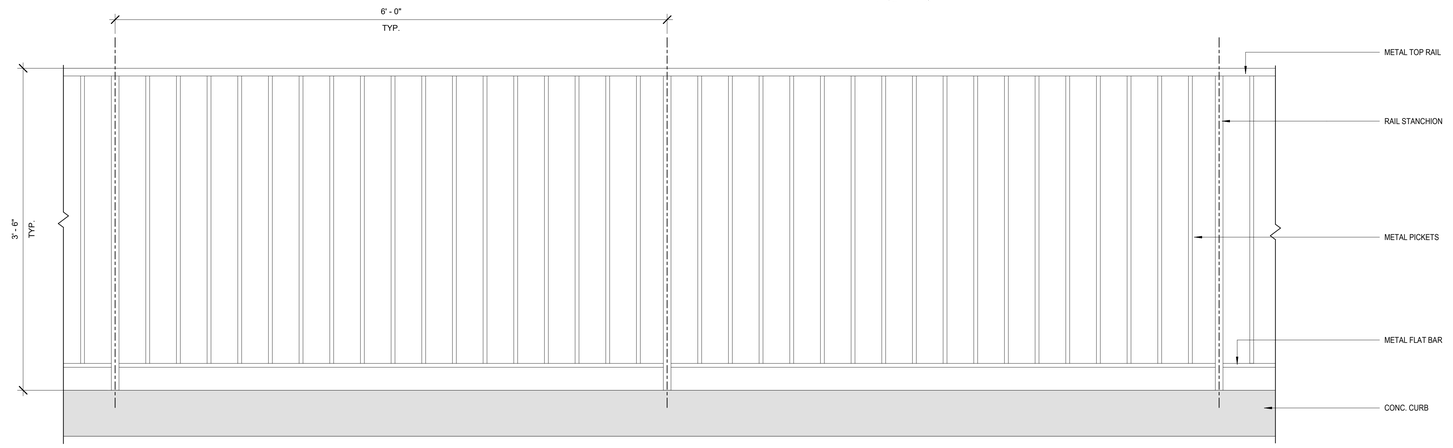

1 DECORATIVE GUARDRAIL - ELEVATION
1 1/2" = 1'-0"

REALM
COLLABORATIVE
100 E BROAD STREET
SUITE 1710
COLUMBUS, OHIO 43215
PHONE 614.670.7390
www.REALMCOLLABORATIVE.com

PROJECT INFORMATION

WS Hilldale Phase 3

HILLDALE
MADISON

702 N Midvale Blvd
Madison, WI 53705

ISSUANCE AND REVISIONS

DATE	DESCRIPTION
03/13/2023	CITY SUBMITTAL

KEY PLAN

SHEET INFORMATION

PROGRESS DOCUMENTS NOT FOR CONSTRUCTION

These documents reflect progress and intent and may be subject to change, including additional detail. These are not final construction documents and shall not be used for final bidding or construction-related purposes.

PROJECT MANAGER	REALM
PROJECT NUMBER	2021-03

LANDSCAPE MISC METAL DETAILS

L513

TO OBTAIN LOCATION OF PARTICIPANTS' UNDERGROUND FACILITIES BEFORE YOU EXCAVATE, CALL
CALL DIGGERS HOTLINE
1-800-242-8511
TOLL FREE
WIS. STATUTE 182.0175 (1974) REQUIRES MIN. OF 3 WORK DAYS NOTICE BEFORE YOU EXCAVATE

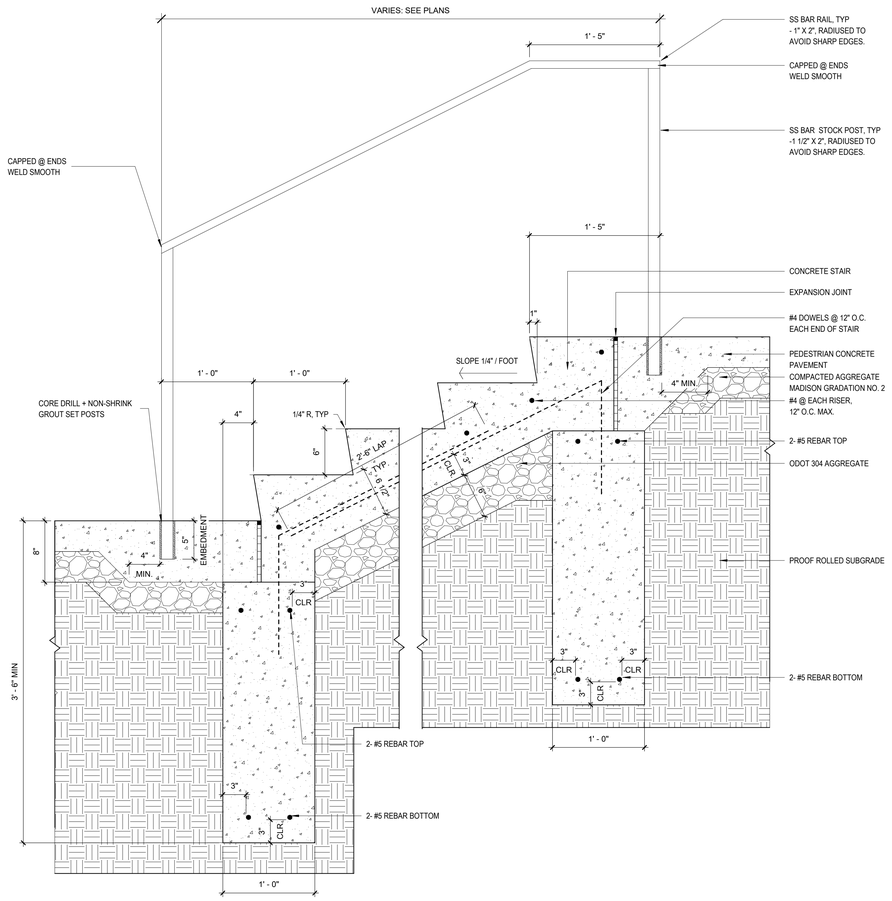

4 CONCRETE STAIR - 4+ STEPS
1 1/2" = 1'-0"

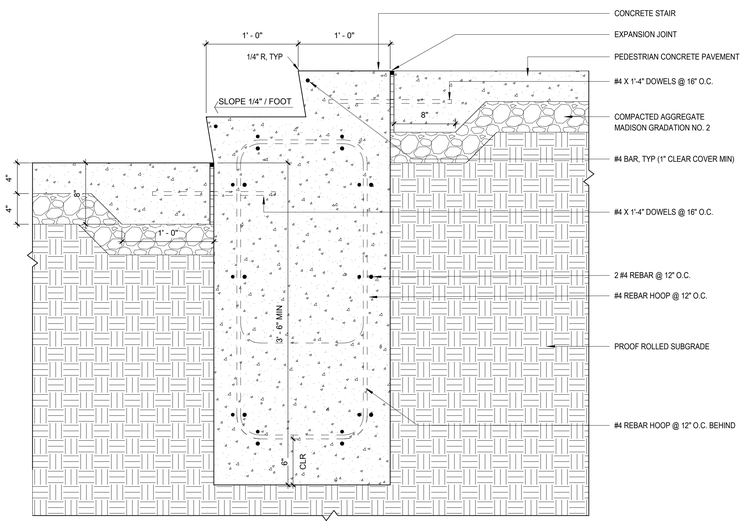

3 CONCRETE STAIR - 2 STEPS
1 1/2" = 1'-0"

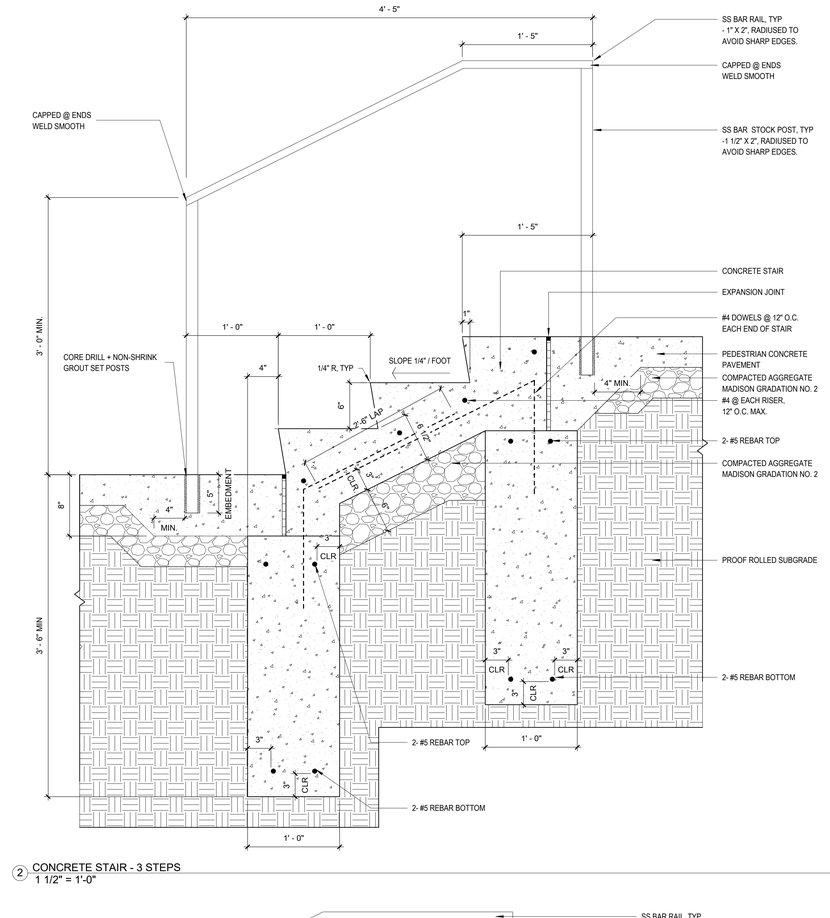

2 CONCRETE STAIR - 3 STEPS
1 1/2" = 1'-0"

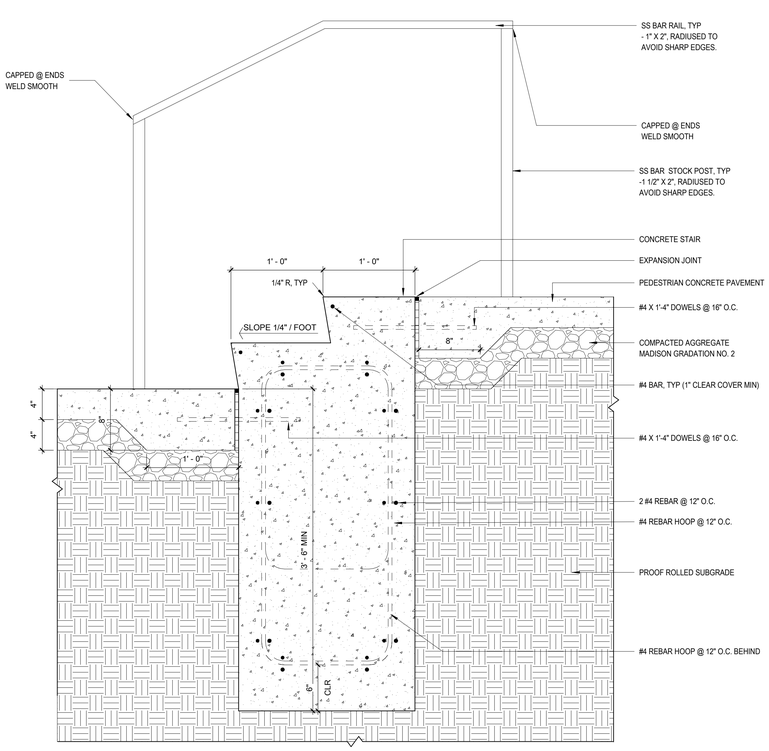

1 CONCRETE STAIR - 2 STEPS W/ HANDRAIL
1 1/2" = 1'-0"

REALM
COLLABORATIVE
100 E BROAD STREET
SUITE 1710
COLUMBUS, OHIO 43215
PHONE 614.670.7390
www.REALMCOLLABORATIVE.com

PROJECT INFORMATION

WS Hilldale Phase 3

HILLDALE
MADISON

702 N Midvale Blvd
Madison, WI 53705

ISSUANCE AND REVISIONS

DATE	DESCRIPTION
03/13/2023	CITY SUBMITTAL

KEY PLAN

SHEET INFORMATION

PROGRESS DOCUMENTS NOT FOR CONSTRUCTION

These documents reflect progress and intent and may be subject to change, including additional detail. These are not final construction documents and shall not be used for final bidding or construction-related purposes.

PROJECT MANAGER	REALM
PROJECT NUMBER	2021-03

LANDSCAPE STAIR DETAILS

L514

TO OBTAIN LOCATION OF PARTICIPANTS' UNDERGROUND FACILITIES BEFORE YOU DIG IN WISCONSIN
CALL DIGGERS HOTLINE
1-800-242-8511
TOLL FREE
WIS. STATUTE 182.0175 (1974)
REQUIRES 3 WORKING DAYS
NOTICE BEFORE YOU EXCAVATE

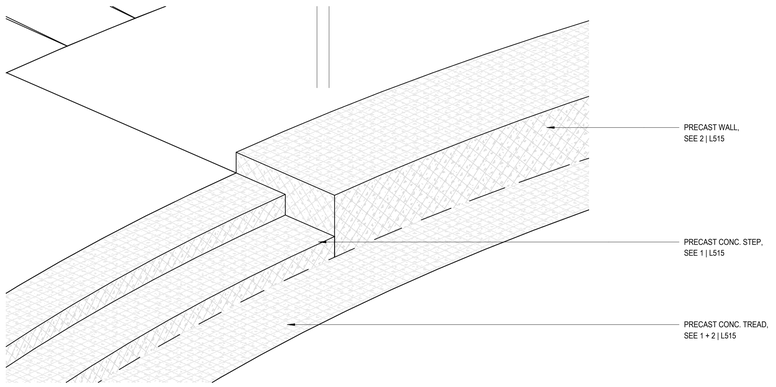

2 PRECAST STAIRS - AXON

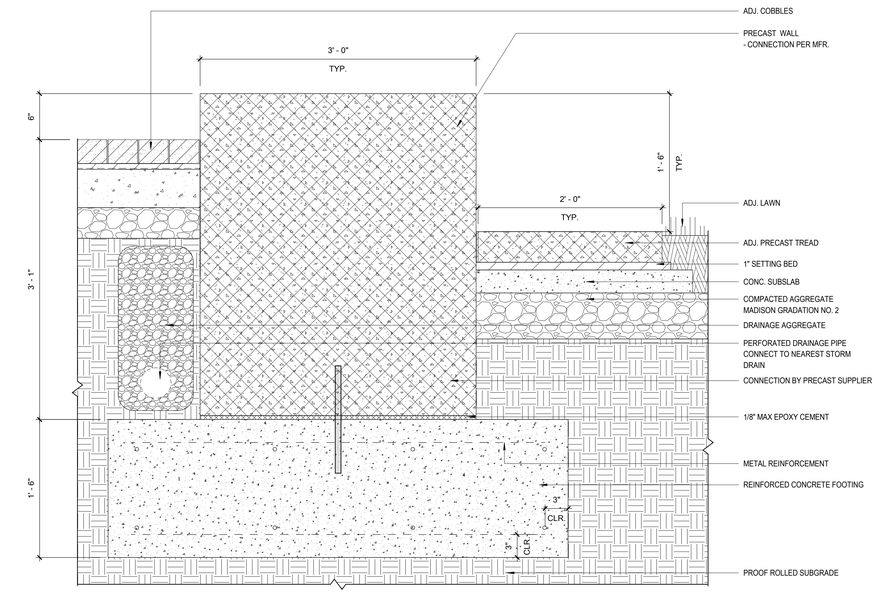

3 PRECAST SEATWALL - SECTION
1 1/2" = 1'-0"

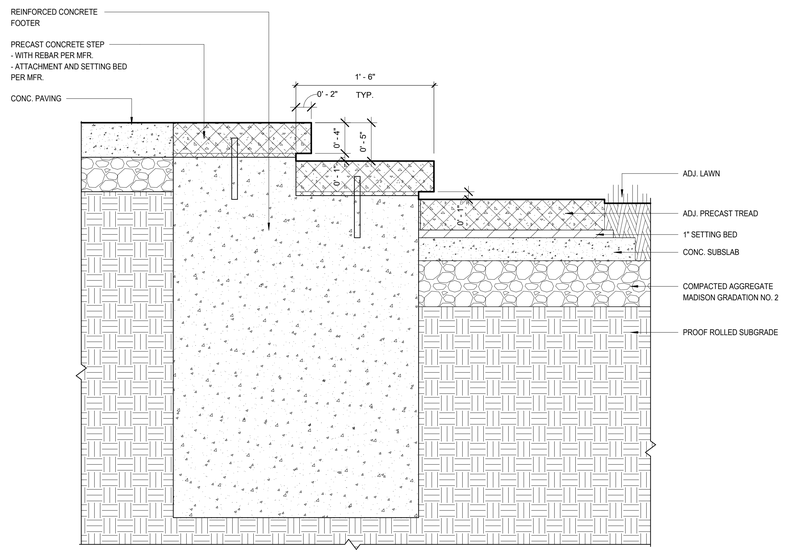

1 PRECAST STAIRS - SECTION
1 1/2" = 1'-0"

REALM
COLLABORATIVE

100 E BROAD STREET
SUITE 1710
COLUMBUS, OHIO 43215
PHONE 614.670.7390
www.REALMCOLLABORATIVE.com

PROJECT INFORMATION

WS Hilldale Phase 3

HILLDALE
MADISON

702 N Midvale Blvd
Madison, WI 53705

ISSUANCE AND REVISIONS

DATE	DESCRIPTION
03/13/2023	CITY SUBMITTAL

KEY PLAN

SHEET INFORMATION

PROGRESS DOCUMENTS NOT FOR CONSTRUCTION

These documents reflect progress and intent and may be subject to change, including additional detail. These are not final construction documents and shall not be used for final bidding or construction-related purposes.

PROJECT MANAGER	REALM
PROJECT NUMBER	2021-03

LANDSCAPE
PRECAST
ELEMENTS

L515

TO OBTAIN LOCATION OF PARTICIPATING UNDERGROUND FACILITIES BEFORE YOU DIG IN WISCONSIN
CALL DIGGERS HOTLINE
1-800-242-8511
TOLL FREE
WIS. STATUTE 182.0175 (1974) REQUIRES YOU TO GIVE THIS NOTICE BEFORE YOU EXCAVATE

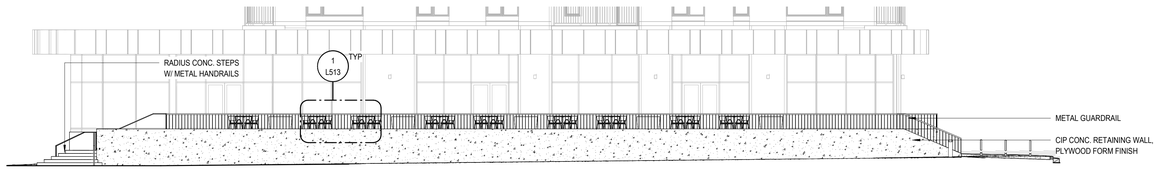

9 WALL TYPE A @ BLDG 500 - ELEVATION
1" = 10'-0"

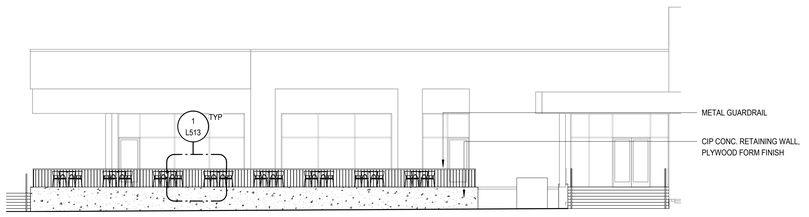

8 WALL TYPE A @ BLDG 200 - ELEVATION
1" = 10'-0"

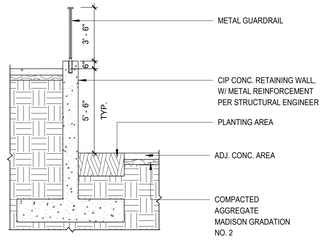

5 SECTION - LOW WALL @ BLDG 500
1/4" = 1'-0"

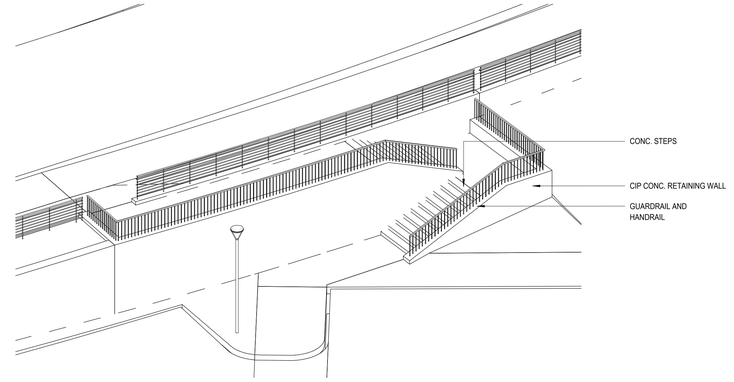

3 SEGOE RETAINING WALL + STAIRS - AXON

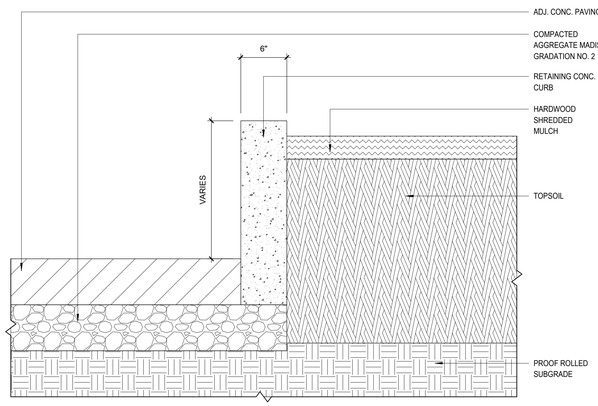

7 CURB - RETAINING - SECTION
1 1/2" = 1'-0"

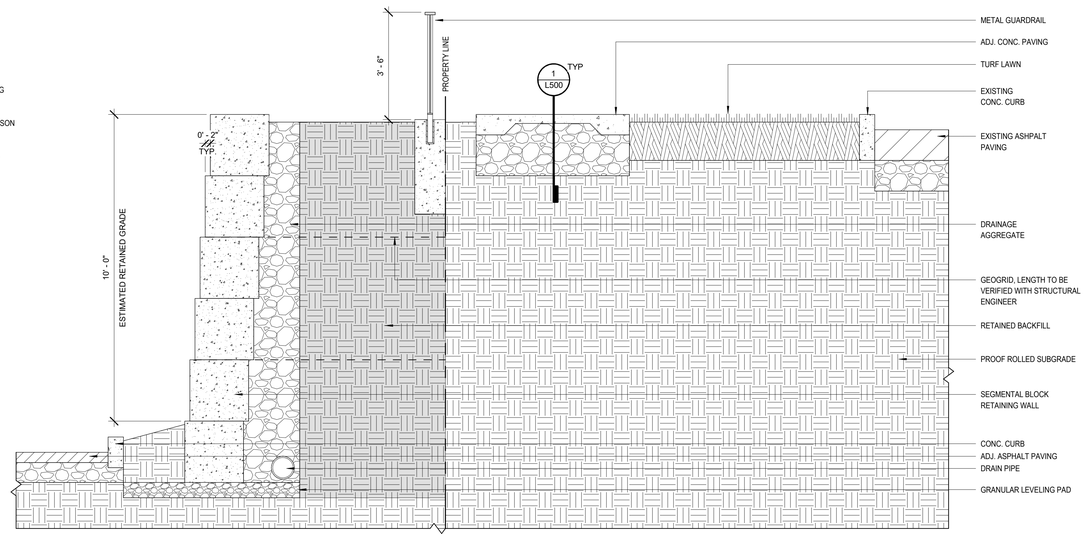

4 WALL TYPE B - SEGMENTAL BLOCK RETAINING WALL - SECTION
1/2" = 1'-0"

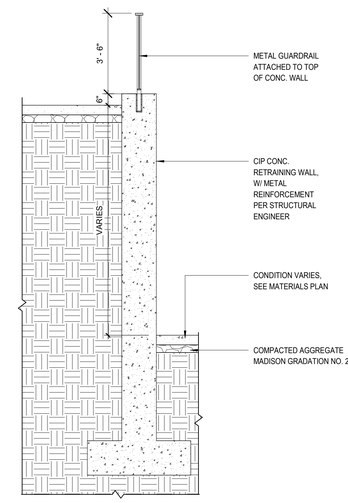

2 WALL TYPE A - TALL RETAINING WALL - SECTION
3/8" = 1'-0"

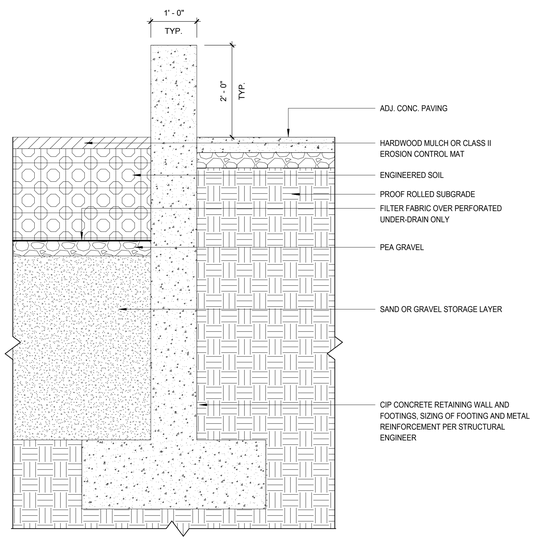

6 WALL TYPE A - @ BIO RETENTION BASIN SHORT RETAINING WALL - SECTION
3/4" = 1'-0"

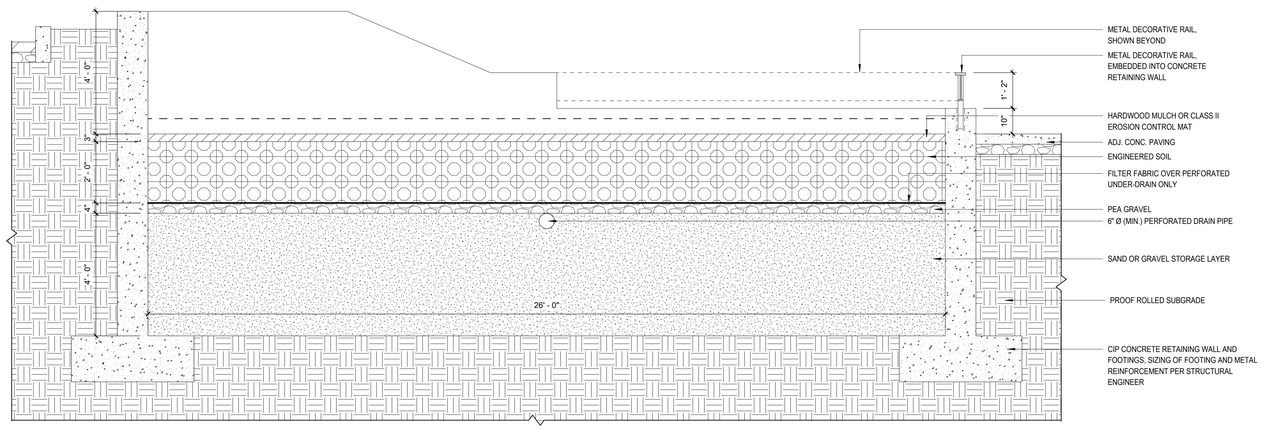

1 WALL TYPE A - @ BIO RETENTION BASIN - SECTION
1/2" = 1'-0"

REALM
COLLABORATIVE

100 E BROAD STREET
SUITE 1710
COLUMBUS, OHIO 43215
PHONE 614.670.7390
www.REALMCOLLABORATIVE.com

PROJECT INFORMATION

WS Hilldale Phase 3

HILLDALE
MADISON

702 N Midvale Blvd
Madison, WI 53705

ISSUANCE AND REVISIONS

DATE	DESCRIPTION
03/13/2023	CITY SUBMITTAL

KEY PLAN

SHEET INFORMATION

PROGRESS DOCUMENTS NOT FOR CONSTRUCTION

These documents reflect progress and intent and may be subject to change, including additional detail. These are not final construction documents and shall not be used for final bidding or construction-related purposes.

PROJECT MANAGER	REALM
PROJECT NUMBER	2021-03

LANDSCAPE WALL DETAILS

L516

TO OBTAIN LOCATION OF PARTICIPATING UNDERGROUND FACILITIES BEFORE YOU DIG IN WISCONSIN
CALL DIGGERS HOTLINE
1-800-242-5511
TOLL FREE
WIS. STATUTE 182.0175 (1974) REQUIRES MIN. OF 3 WORK DAYS NOTICE BEFORE YOU EXCAVATE

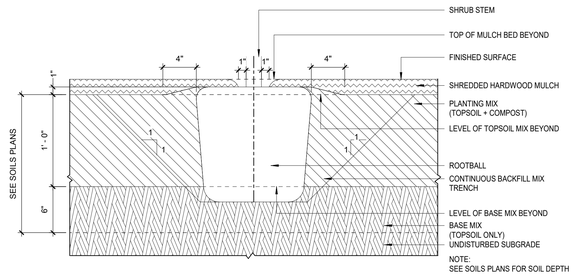

10 SHRUB PLANTING
1 1/2" = 1'-0"

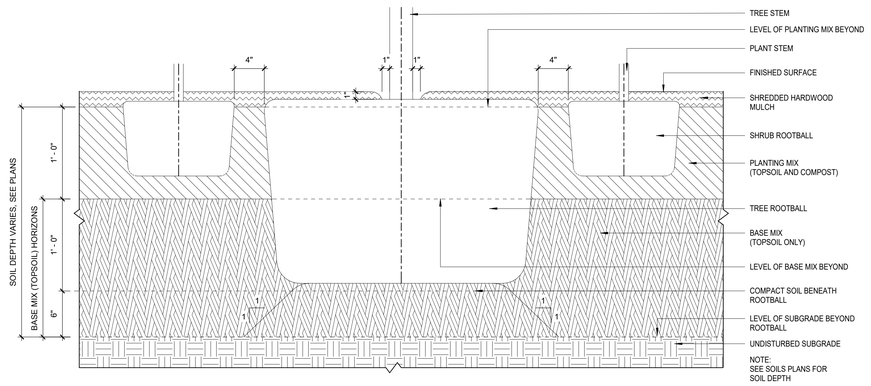

9 TREE PLANTING - PLANT BED
1 1/2" = 1'-0"

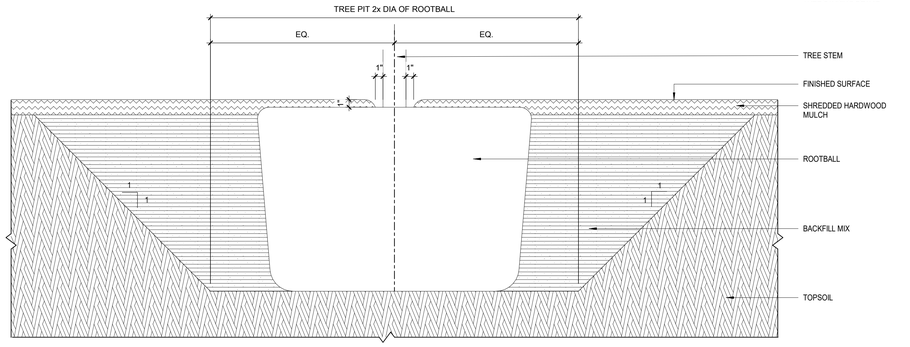

8 TREE PLANTING - GROUNDCOVER BED
1 1/2" = 1'-0"

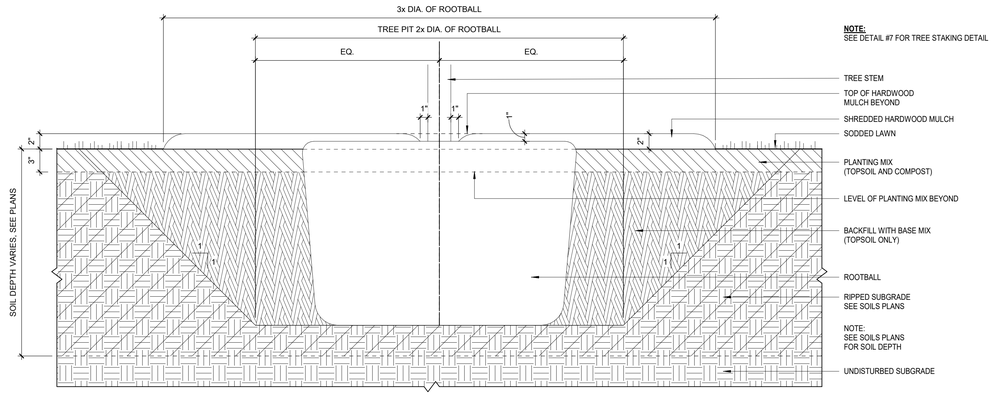

7 TREE PLANTING - LAWN AREAS
1 1/2" = 1'-0"

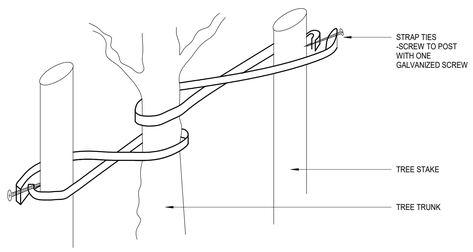

PERSPECTIVE

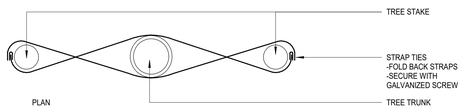

PLAN

6 TREE STAKING - ARBOR TIES
1" = 1'-0"

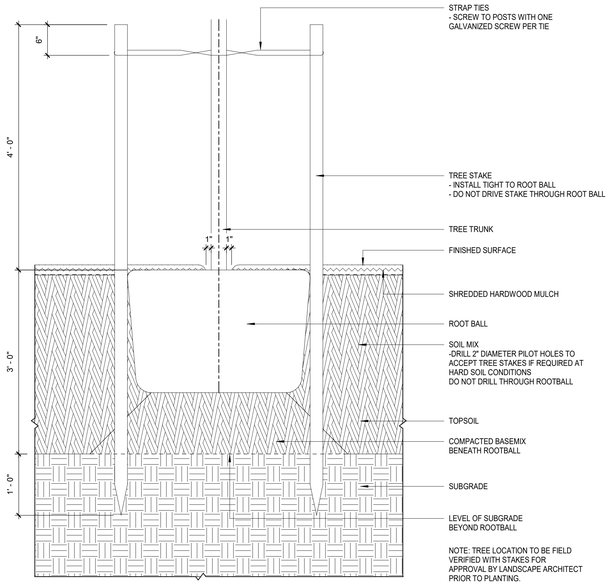

SECTION

5 TREE STAKING - SINGLE STEM TREE
1" = 1'-0"

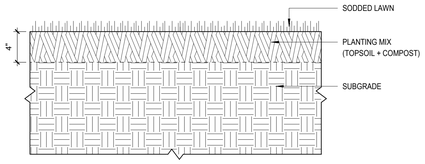

4 LAWN PLANTING
1 1/2" = 1'-0"

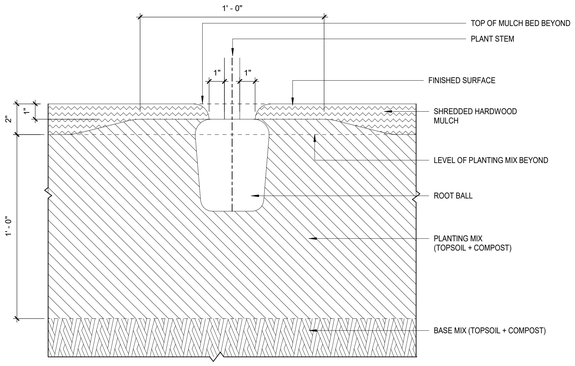

3 GROUNDCOVER / PERENNIAL PLANTING
3" = 1'-0"

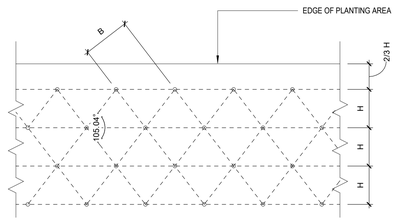

TRIANGULAR SPACING = B	DISTANCE BETWEEN ROWS = H	TOTAL AREA (SF) PER PLANT
6"	5"	0.21
8"	7"	0.39
9"	8"	0.50
10"	8 1/2"	0.59
12"	10 1/2"	0.88
15"	13"	1.35
18"	15 1/2"	1.94
21"	18"	2.63
24"	21"	3.50
30"	26"	5.42
36"	31"	7.80
48"	42"	13.84

2 TRIANGULAR PLANT SPACING DIAGRAM
12" = 1'-0"

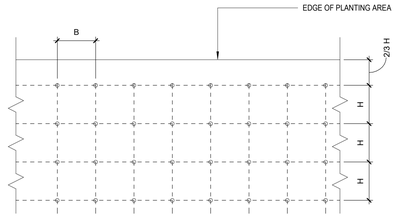

ORTHOGONAL SPACING = B	DISTANCE BETWEEN ROWS = H	TOTAL AREA (SF) PER PLANT
6"	6"	0.25
8"	8"	0.50
9"	9"	0.60
10"	10"	0.70
12"	12"	1.00
15"	15"	1.60
18"	18"	2.25
21"	21"	3.00
24"	24"	4.00
30"	30"	6.25
36"	36"	9.00
48"	48"	16.00

1 ORTHOGONAL PLANT SPACING DIAGRAM
12" = 1'-0"

REALM
COLLABORATIVE
100 E BROAD STREET
SUITE 1710
COLUMBUS, OHIO 43215
PHONE 614.670.7390
www.REALMCOLLABORATIVE.com

PROJECT INFORMATION

WS Hilldale Phase 3

HILLDALE
MADISON

702 N Midvale Blvd
Madison, WI 53705

ISSUANCE AND REVISIONS

DATE	DESCRIPTION
03/13/2023	CITY SUBMITTAL

KEY PLAN

SHEET INFORMATION

PROGRESS DOCUMENTS NOT FOR CONSTRUCTION

These documents reflect progress and intent and may be subject to change, including additional detail. These are not final construction documents and shall not be used for final bidding or construction-related purposes.

PROJECT MANAGER	REALM
PROJECT NUMBER	2021-03

LANDSCAPE PLANTING DETAILS

L530

TO OBTAIN LOCATION OF PARTICIPANTS' UNDERGROUND FACILITIES BEFORE YOU DIG IN WISCONSIN
CALL DIGGERS HOTLINE
1-800-242-8511
TOLL FREE
WIS. STATUTE 182.0175 (1974) REQUIRES MIN. OF 3 WORK DAYS NOTICE BEFORE YOU EXCAVATE

CITY OF MADISON
LANDSCAPE WORKSHEET

Section 28.142 Madison General Ordinance

Project Location / Address 702 N. MIDVALE BLVD., MADISON, WI 53706

Name of Project HILLDALE - PHASE 3 DEVELOPMENT

Owner / Contact WS DEVELOPMENT - CHRIS BOYCE, DIRECTOR OF DEVELOPMENT

Contact Phone _____ Contact Email Chris.Boyce@wsdevelopment.com

**** Landscape plans for zoning lots greater than ten thousand (10,000) square feet in size MUST be prepared by a registered landscape architect. ****

Applicability

The following standards apply to all exterior construction and development activity, including the expansion of existing buildings, structures and parking lots, except the construction of detached single-family and two-family dwellings and their accessory structures. The entire development site must be brought up to compliance with this section unless **all** of the following conditions apply, in which case only the affected areas need to be brought up to compliance:

(a) The area of site disturbance is less than ten percent (10%) of the entire development site during any ten-(10) year period.

(b) Gross floor area is only increased by ten percent (10%) during any ten-(10) year period.

(c) No demolition of a principal building is involved.

(d) Any displaced landscaping elements must be replaced on the site and shown on a revised landscaping plan.

Landscape Calculations and Distribution

Required landscaped areas shall be calculated based upon the total developed area of the property. Developed area is defined as that area within a single contiguous boundary which is made up of structures, parking, driveways and docking/loading facilities, but excluding the area of any building footprint at grade, land designated for open space uses such as athletic fields, and undeveloped land area on the same zoning lot. There are three methods for calculating landscape points depending on the size of the lot and Zoning District.

(a) For all lots except those described in (b) and (c) below, five (5) landscape points shall be provided for each three hundred (300) square feet of developed area.

Total square footage of developed area _____

Total landscape points required _____

(b) **For lots larger than five (5) acres**, points shall be provided at five (5) points per three hundred (300) square feet for the first five (5) developed acres, and one (1) point per one hundred (100) square feet for all additional acres.

Total square footage of developed area 261,360 SQFT / 6.0 AC

Five (5) acres = 217,800 square feet

First five (5) developed acres = 3,630 points

Remainder of developed area 43,560 SQFT / 1.0 AC

Total landscape points required 3,630 + 435 = 4,065 TOTAL PTS.

(c) **For the Industrial – Limited (IL) and Industrial – General (IG) districts**, one (1) point shall be provided per one hundred (100) square feet of developed area.

Total square footage of developed area _____

Total landscape points required _____

Tabulation of Points and Credits

Use the table to indicate the quantity and points for all existing and proposed landscape elements.

Plant Type/ Element	Minimum Size at Installation	Points	Credits/ Existing Landscaping		New/ Proposed Landscaping	
			Quantity	Points Achieved	Quantity	Points Achieved
Overstory deciduous tree	2½ inch caliper measured diameter at breast height (dbh)	35	10	350	62	2,170
Tall evergreen tree (i.e. pine, spruce)	5-6 feet tall	35	X	X	37	1,295
Ornamental tree	1 1/2 inch caliper	15	X	X	14	210
Upright evergreen shrub (i.e. arborvitae)	3-4 feet tall	10	25	250	X	X
Shrub, deciduous STORMWATER PLANTS	#3 gallon container size, Min. 12"-24"	3	X	X	188	564
Shrub, evergreen	#3 gallon container size, Min. 12"-24"	4	X	X	189	756
Ornamental grasses/ perennials	#1 gallon container size, Min. 8"-18"	2	X	X	900 O.G. 2400 G.C.	1,800 4,800
Ornamental/ decorative fencing or wall	n/a	4 per 10 lineal ft.	400	160	1250	500
Existing significant specimen tree	Minimum size: 2 ½ inch caliper dbh. *Trees must be within developed area and cannot comprise more than 30% of total required points.	14 per caliper inch dbh. Maximum points per tree: 200	X	X	N/A	N/A
Landscape furniture for public seating and/or transit connections	* Furniture must be within developed area, publically accessible, and cannot comprise more than 5% of total required points.	5 points per "seat"	X	X	55	275
Sub Totals				760		12,370

Total Number of Points Provided 12,370 PTS.

* As determined by ANSI, ANLA- American standards for nursery stock. For each size, minimum plant sizes shall conform to the specifications as stated in the current American Standard for Nursery Stock.

DECIDUOUS TREES	QUANTITIES:
AG **AMELANCHIER × GRANDIFLORA** -'AUTUMN BRILLIANCE' SERVICEBERRY - 6' HT. / MULTI-STEM - CONDITION: B+B - MATCHED SPECIMEN - TAGGED BY LANDSCAPE ARCHITECT	14
AR **ACER RUBRUM 'FRANK JR' REDPOINTE** REDPOINT MAPLE - SIZE: 4" CAL. - CONDITION: B+B - MATCHED SPECIMEN - TAGGED BY LANDSCAPE ARCHITECT	3
BN **BETULA NIGRA** RIVER BIRCH - SIZE: 3" CAL. - CONDITION: B+B - MATCHED SPECIMEN - TAGGED BY LANDSCAPE ARCHITECT	3
GT **GLEDITSIA TRIACANTHOS F. INERMIS** THORNLESS HONEYLOCUST - SIZE: 3" CAL. - CONDITION: B+B - MATCHED SPECIMEN - TAGGED BY LANDSCAPE ARCHITECT	14
PA **PLATANUS X ACERIFOLIA 'MORTON CIRCLE'** 'EXCLAMATION' LONDON PLANE - SIZE: 5" CAL. - CONDITION: B+B - MATCHED SPECIMEN - TAGGED BY LANDSCAPE ARCHITECT	10
QP **QUERCUS PALUSTRIS** PIN OAK - SIZE: 5" CAL. - CONDITION: B+B - MATCHED SPECIMEN - TAGGED BY LANDSCAPE ARCHITECT	15
ZS **ZELKOVA SERRATA 'GREEN VASE'** - JAPANESE ZELKOVA - SIZE: 5" CAL. - CONDITION: B+B - MATCHED SPECIMEN - TAGGED BY LANDSCAPE ARCHITECT	3
EVERGREEN TREES	QUANTITIES:
JUNIPERUS CHINENSIS 'SPARTAN' - UPRIGHT JUNIPER - SIZE: 6-7' - CONDITION: B+B - MATCHED SPECIMEN - TAGGED BY LANDSCAPE ARCHITECT	37
SHRUBS	QUANTITIES:
BUXUS 'GREEN VELVET' 'GREEN VELVET' BOXWOOD - SIZE: 18-24" - CONDITION: B+B - NATURAL FORM	20
ILEX GLABRA 'CHAMZIN' NORDIC INKBERRY - SIZE: 15-18" - CONDITION: NO. 3 CONT. - NATURAL FORM	72
RHUS AROMATICA 'GRO-LOW' FRAGRANT SUMAC - SIZE: 18-24" - CONDITION: NO. 3 CONT.	156
RIBES ALPINUM ALPINE CURRANT - SIZE: 18-24" - CONDITION: NO. 5 CONT.	32
TAXUS MEDIA 'DENSIFORMIS' DENSIFORMIS YEW - SIZE: 24-36" - CONDITION: NO. 5 CONT. - MATCHED SPECIMEN	97
PERENNIALS + GRASSES	QUANTITIES:
BOUTELOUA GRACILIS - 'BLONDE AMBITION' GRASS - SIZE: NO. 2 CONT. - MATCHED SOURCE	50
CALAMAGROSTIS ACUTIFLORA - KARL FOERSTER REED GRASS - SIZE: NO. 2 CONT. - MATCHED SOURCE	240
PANICUM VIRGATUM 'SHENANDOAH' - SHENANDOAH SWITCH GRASS - SIZE: NO. 2 CONT. - MATCHED SOURCE	181
GROUND COVERS	QUANTITIES:
PARTHENOCISSUS TRICUSPIDATA 'VEITCHII' BOSTON IVY - SIZE: NO. 2 CONT. - SPACING: AS SHOWN	18
ORNAMENTAL GRASSES MIX - SIZE: NO. 2 CONT. - SPACING: TRI, 18" O.C. - 2,000 TOTAL SQFT	
HEDERA HELIX ENGLISH IVY - SIZE: NO. 1 CONT. - SPACING: TRI, 12" O.C. - 2,125 TOTAL SQFT	
LAWN - SOD - 13,000 TOTAL SQFT	
LAWN, ARTIFICIAL - MFR: XGRASS - PREMIER NATURAL - 7,375 TOTAL SQFT	

LANDSCAPE NOTES

1. REFER TO THE EXISTING CONDITIONS SURVEY FOR EXISTING CONDITIONS NOTES AND LEGEND.

2. REALM COLLABORATIVE SHALL BE HELD HARMLESS AND DOES NOT WARRANT ANY DEVIATIONS BY THE OWNER/CONTRACTOR FROM THE APPROVED CONSTRUCTION PLANS THAT MAY RESULT IN DISCIPLINARY ACTIONS BY ANY OR ALL REGULATORY AGENCIES.

3. THE LANDSCAPE CONTRACTOR SHALL COORDINATE ALL FINE GRADING AND TOPSOILING WITH GENERAL CONTRACTOR

4. CONTRACTOR SHALL REVIEW SITE CONDITIONS FOR UTILITY CONFLICTS, DRAINAGE ISSUES, SUBSURFACE ROCK, AND PLANT PLACEMENT CONFLICTS PRIOR TO PLANT INSTALLATION. REPORT ANY CONDITIONS THAT MAY HAVE ADVERSE IMPACT ON PLANTING OPERATIONS TO LANDSCAPE ARCHITECT

5. DO NOT COMMENCE PLANTING OPERATIONS UNTIL ALL ADJACENT SITE IMPROVEMENTS, IRRIGATION INSTALLATION, AND FINISH GRADING ARE COMPLETE

6. GENERAL: ALL WORK IN THE R-0-W AND PUBLIC EASEMENTS SHALL BE IN ACCORDANCE WITH LOCAL MUNICIPAL REQUIREMENTS. REALM COLLABORATIVE SHALL BE HELD HARMLESS AND DOES NOT WARRANT ANY DEVIATIONS BY THE OWNER/CONTRACTOR FROM THE APPROVED CONSTRUCTION PLANS THAT TODAY RESULT IN DISCIPLINARY ACTIONS BY ANY OR ALL REGULATORY AGENCIES. LOCATE ALL UTILITIES PRIOR TO CONSTRUCTION. THE CONTRACTOR IS RESPONSIBLE FOR REPAIRING ANY DAMAGE DONE TO UTILITIES. CONTRACTOR MUST CALL 1-800-242-8511 FOR UTILITY LOCATIONS AT LEAST THREE DAYS PRIOR TO DIGGING. HAND DIG AND INSTALL ALL PLANTS THAT ARE NEAR EXISTING UTILITIES. PROTECT PREVIOUSLY INSTALLED WORK OF OTHER TRADES. CONTRACTOR IS RESPONSIBLE FOR STAKING THE PLANT MATERIALS FOR REVIEW BY OWNER PRIOR TO DIGGING AND PLACEMENT AND SHALL COORDINATE ALL FINE GRADING AND RESTORATION WITH THE GRADING CONTRACTOR.

7. DELIVERY AND HANDLING: DO NOT DEL~ER MORE PLANT MATERIALS' THAN CAN BE PLANTED IN ONE DAY, UNLESS ADEQUATE, APPROPRIATE AND SECURE STORAGE IS PROVIDED AND APPROVED BY OWNER'S REPRESENTATIVE. AT ALL TIMES, PROTECT ALL PLANT MATERIALS FROM A WIND AND DIRECT SUN. DELIVER PLANTS WITH LEGIBLE IDENTIFICATION LABELS. PROTECT PLANTS DURING DELIVERY AND DO NOT PRUNE PRIOR TO DELIVERY. ALL TREES AND SHRUBS SHALL BE PLANTED ON THE DAY OF DELIVERY; IF THIS IS NOT POSSIBLE, PROTECT THE PLANT MATERIALS NOT PLANTED BY STORING THEM IN A SHADED, SECURE AREA, PROTECTING THE ROOT MASS WITH WET SOIL, MULCH, HAY OR OTHER SUITABLE MEDIUM. CONTRACTOR TO KEEP ALL PLANT MATERIALS ADEQUATELY WATERED TO PREVENT ROOT DESICCATION. DO NOT REMOVE CONTAINER GROWN STOCK FROM CONTAINERS BEFORE TIME OF PLANTING. DO NOT PICK UP CONTAINER OR BALLED PLANTS BY STEM OR ROOTS. ALL PLANTS SHALL BE HANDLED FROM THE BOTTOM OF THE CONTAINER OR BALL. PERFORM ACTUAL PLANTING ONLY WHEN WEATHER AND SOIL CONDITIONS ARE SUITABLE IN ACCORDANCE WITH LOCALLY ACCEPTED BEST HORTICULTURAL PRACTICES.

8. MATERIALS - PLANTS: ALL PLANTS SHALL. CONFORM TO THE LATEST VERSION OF THE AMERICAN STANDARD FOR NURSERY STOCK ANSI Z60. 1. PLANTS SHALL BE TRUE TO SPECIES AND VARIETY SPECIFIED AND NURSERY GROWN IN ACCORDANCE WITH GOOD HORTICULTURAL PRACTICES UNDER CLIMATIC CONDITIONS SIMILAR TO THOSE IN THE LOCALITY OF THE PROJECT FOR AT LEAST 2 YEARS. PLANTS SHALL BE FRESHLY DUG (DURING THE MOST RECENT FAVORABLE HARVEST SEASON). PLANTS SHALL BE SO TRAINED IN DEVELOPMENT AND APPEARANCE /S TO BE UNQUESTIONABLY SUPERIOR IN FORM, COMPACTNESS, AND SYMMETRY. PLANTS SHALL BE SOUND, HEALTHY, VIGOROUS, WELL BRANCHED AND DENSELY FOLIATED WHEN IN LEAF, AND FREE OF DISEASE AND INSECTS (ADULT EGGS, PUPAE OR LARVAE). THEY SHALL HAVE HEALTHY, WELL-.DEVELOPED ROOT SYSTEMS AND SHALL. BE FREE FROM PHYSICAL DAMAGE OR OTHER CONDITIONS THAT WOULD PREVENT HARMING GROWTH OR PREMATURE MORTALITY. PLANTS SHALL BE OF THE HIGHEST QUALITY, POSSESS TYPICAL GROWTH HABITS AND FORM FOR THEIR SPECIES AND BE FREE OF INJURY. PARKWAY TREES AND PARKING LOT TREES SHALL HAVE A MINIMUM BRANCHING HEIGHT OF SIX (6) FEET ABOVE THE GROUND TO ALLOW ADEQUATE VISUAL AND PHYSICAL CLEARANCE.

9. PRUNING: THE CONTRACTOR SHALL PRUNE ALL TREES AND REPAIR *ALL* INJURIES THAT OCCURRED DURING THE PLANTING PROCESS. DOUBLE LEADERS, DEAD BRANCHES, AND LIMBS DAMAGED OR BROKEN DURING THE PLANTING PROCESS, SHALL BE PRUNED. THIS SHALL. BE THE ONLY PRUNING ALLOWED AT PLANTING. PRUNING SHALL CONFORM TO THE LATEST VERSION OF THE AMERICAN STANDARD FOR TREE CARE OPERATIONS, ANSI A300. PRUNE TREES IN ACCORDANCE WITH THE GUIDELINES. DO NOT TOP TREES. PRUNE SHRUBS ACCORDING TO STANDARD HORTICULTURAL PRACTICES. ON CUTS OVER 3/4, IN DIAMETER AND BRUISES OR SCARS ON BARK, TRACE THE INJURED CAMBIUM LAYER BACK TO LIVING TISSUE AND REMOVE. SMOOTH AND SHAPE WOUNDS SO AS NOT TO RETAIN WATER. TREAT THE AREA WITH AN APPROVED INCONSPICUOUS LATEX BASED ANTISEPTIC TREE PAINT, IF PRUNING OCCURS IN SEASON". DO NOT PRUNE ANY OAK TREES DURING THE MONTHS FROM APRIL TO OCTOBER.

10. CLEANUP: THE WORK AREA SHALL BE KEPT SAFE AND NEAT AT ALL TIMES. DISPOSED OF EXCESS SOIL REMOVE ALL CUTTINGS AND WASTE MATERIALS. SOIL AND BRANCHES. BIND AND WRAP THESE MATERIALS, ANY REJECTED PLANTS, AND ANY OTHER DEBRIS RESULTING FROM AU. PLANTING TASKS AND PROMPTLY CLEAN UP AND REMOVE FROM THE PROJECT SITE. UNDER NO CIRCUMSTANCES SHALL THE ACCUMULATION OF SOIL, BRANCHES OR OTHER DEBRIS BE ALLOWED UPON A PUBLIC PROPERTY IN SUCH A MANNER AS TO RESULT IN A PUBLIC SAFETY HAZARD OR DAMAGE. LIKEWISE, UNDER NO CIRCUMSTANCES SHALL ANY DEBRIS OR INCIDENTAL MATERIALS BE ALLOWED UPON ADJACENT PRIVATE PROPERTY.

11. ANY SUBSTITUTIONS IN PLANT TYPE, LOCATION, OR SIZE SHALL BE APPROVED BY LANDSCAPE ARCHITECT PRIOR TO INSTALLATION.

12. CONTRACTOR TO VERIFY PLANT MATERIAL QUANTITIES AND SQUARE FOOTAGES. QUANTITIES SHOWN ON PLAN TAKE PRECEDENCE OVER THOSE ON SCHEDULE.

LANDSCAPE MATERIAL NOTES

1. MATERIALS - PLANTING MIXTURE: ALL HOLES EXCAVATED FOR TREES, SHRUBS, PERENNIALS AND ORNAMENTAL GRASSES SHALL. BE BACKFILLED WITH TWO (2) PARTS TOPSOIL, ONE (1) PART SAND AND ONE (1) PART COMPOST. SOIL MIXTURE SHALL. BE WELL BLENDED PRIOR TO INSTALLATION. LANDSCAPE CONTRACTOR SHALL CONFIRM EXCAVATION AND BACKFILLING SCHEDULE WITH SITE CONTRACTOR.

2. MATERIALS - TOPSOIL: TOPSOIL TO BE CLEAN, FRIABLE LOAM FROM A LOCAL SOURCE, FREE FROM STONES OR DEBRIS OVER 3/4" IN DIAMETER, AND FREE FROM TOXINS OR OTHER DELETERIOUS MATERIALS. TOPSOIL SHALL HAVE A pH VALUE BETWEEN 6 AND 7. TOPSOIL AND PLANTING SOIL SHALL BE TESTED TO ENSURE CONFORMANCE 'WITH THESE SPECIFICATIONS AND SHALL BE AMENDED TO MEET THESE SPECIFICATIONS. PROVIDE TEST RESULTS TO OWNER'S REPRESENTATIVE PRIOR TO PLACEMENT. DO NOT PLACE FROZEN OR MUDDY TOPSOIL APPLY SOIL AMENDMENTS TO ALL LANDSCAPE AREAS PER SOIL TEST.

3. MATERIALS - SHREDDED HARDWOOD BARK MULCH: ALL PLANTING AREAS LABELED ON PLAN SHALL RECEIVE CERTIFIED WEED FREE SHREDDED HARDWOOD BARK MULCH INSTALLED TO A MINIMUM AND CONSISTENT DEPTH OF 3-INCHES. SHREDDED HARDWOOD BARK MULCH SIZE &: COLOR TO BE APPROVED BY OWNER'S REPRESENTATIVE PRIOR TO INSTALLATION. FERTILIZER SHALL BE IN ACCORDANCE 'WITH APPLICABLE LOCAL, COUNTY AND STATE REQUIREMENTS. SHREDDED HARDWOOD BARK MULCH AREAS SHALL NOT RECEIVE WOVEN WEED BARRIER FABRIC.

4. MATERIALS - DECORATIVE STONE MULCH: ALL PLANTING AREAS LABELED ON PLAN SHALL RECEIVE DECORATIVE STONE MULCH SPREAD TO A MINIMUM AND CONSISTENT DEPTH OF 3-INCHES. DECORATIVE STONE MULCH TYPE. SIZE & COLOR TO BE APPROVED BY OWNER'S REPRESENTATIVE PRIOR TO INSTALLATION. FERTILIZER SHALL BE IN ACCORDANCE WITH APPLICABLE LOCAL, COUNTY AND STATE REQUIREMENTS. SRNE MULCH AREAS SHALL RECEIVE\ WOVEN WEEP BARRIER FABRIC. NO PLASTIC/IMPERVIOUS BARRIERS 'MLL BE PERMITTED. EXAMPLE: BLACK VISQUEEN.

5. MATERIALS - TREE &: SHRUB RINGS: ALL TREES AND/OR SHRUBS PLANTED IN SEEDED LAWN AREAS TO BE INSTALLED WITH A MINIMUM 4' DIAMETER SHREDDED HARDWOOD BARK MULCH TREE RING SPREAD TO A CONSISTENT DEPTH OF 3-INCHES. AU. TREE RINGS SHOULD BE INSTALLED WITH A 5~ DEPTH SHOVEL CUT EDGE, ANGLED 45 DEGREES INTO SOIL AT A 5' DIAMETER ABOUT THE CENTER OF 'THE TREE PLANTING. A PRE-EMERGENT GRANULAR HERBICIDE WEED-PREVENTER SHOULD BE MIXED WITH MULCH USED TO INSTALL TREE RING AS WELL AS TOPICALLY APPLIED TO COMPLETED INSTALLATION OF TREE RING.

6. MATERIALS - POLYETHYLENE EDGING: EDGING SHAU. BE 5" DEEP, POLYETHYLENE EDGING. OWNER'S REPRESENTATIVE SHALL APPROVE PRODUCT SPECIFICATION PROV1DED BY LANDSCAPE CONTRACTOR.

7. MATERIALS - TREE PROTECTION: ALL TREES TO BE INSTALLED WITH LDPE TREE GUARDS AS MANUFACTURED BY A.M. LEONARD HORTICULTURAL TOOL & SUPPLY CO., OR APPROVED EQUAL.

8. TREE WATERING PROGRAM: BASE BID - WATERING OF ALL TREES ON A REGULAR 'WEEKLY BASIS. CONTRACTOR TO KEEP A LOG OR JOURNAL OF A RECORD OF DATES AND QUANTITIES OF SUPPLEMENTAL WATERING EFFORTS ALTERNATE BID 1* - INSTALLATION OF ONE (1) WATERING BAG PER TREE. DOCUMENTATION OF WEEKLY WATERING PROGRAM REQUIREDMATERIALS - (ALTERNATE 1): TREE WATERING BAGS: ALL TREES TO BE INSTALLED WITH ONE (1) WATER BAG. PROOUCT TO BE "TREE GATOR ORIGINAL SLOW RELEASE WATERING BAG." PRODUCT NO. 98183-R OR APPROVED EQUAL INSTALL IN ACCORDANCE WITH MANUFACTURER'S RECOMMENDATIONS.

SEEDING NOTES

1. MATERIALS - TURFGRASS SEED: DISTURBED LAWN AREAS LABELED ON PLAN ->S'SUCH, SHALL RECEIVE 6" OF TOPSOIL AND EARTH CARPET'S "MADISON PARKS• GRASS SEED. CR EQUIVALENT AS APPROVED BY THE OWNER'S REPRESENTATIVE. INSTALLED PER MANUFACTURER'S RECOMMENDATIONS. IN ADDITION TO TURFGRASS SEED, ANNUAL RYE SHALL. BE APPLIED TO ALL DISTURBED AREAS AT A RATE OF 1 1/2 LBS PER 1000 SQUARE FEET. FERTILIZE AND MULCH PER MANUFACTURER'S RECOMMENDATIONS. MULCH SHALL BE CERTIFIED NOXIOUS WEED SEED-FREE.

REALM COLLABORATIVE
100 E BROAD STREET
SUITE 1710
COLUMBUS, OHIO 43215
PHONE 614.670.7390
www.REALMCOLLABORATIVE.com

PROJECT INFORMATION

WS Hilldale Phase 3

HILLDALE MADISON

702 N Midvale Blvd
Madison, WI 53705

ISSUANCE AND REVISIONS

DATE	DESCRIPTION
03/13/2023	CITY SUBMITTAL

KEY PLAN

SHEET INFORMATION

PROGRESS DOCUMENTS NOT FOR CONSTRUCTION

These documents reflect progress and intent and may be subject to change, including additional detail. These are not final construction documents and shall not be used for final bidding or construction-related purposes.

PROJECT MANAGER	REALM
PROJECT NUMBER	2021-03

LANDSCAPE PLANTING DETAILS

L531

TO OBTAIN LOCATION OF PARTICIPANTS' UNDERGROUND FACILITIES BEFORE YOU DIG IN WISCONSIN

CALL DIGGERS HOTLINE
1-800-242-8511
TOLL FREE

WIS. STATUTE 182.0175 (1974) REQUIRES MIN. OF 3 WORK DAYS NOTICE BEFORE YOU EXCAVATE

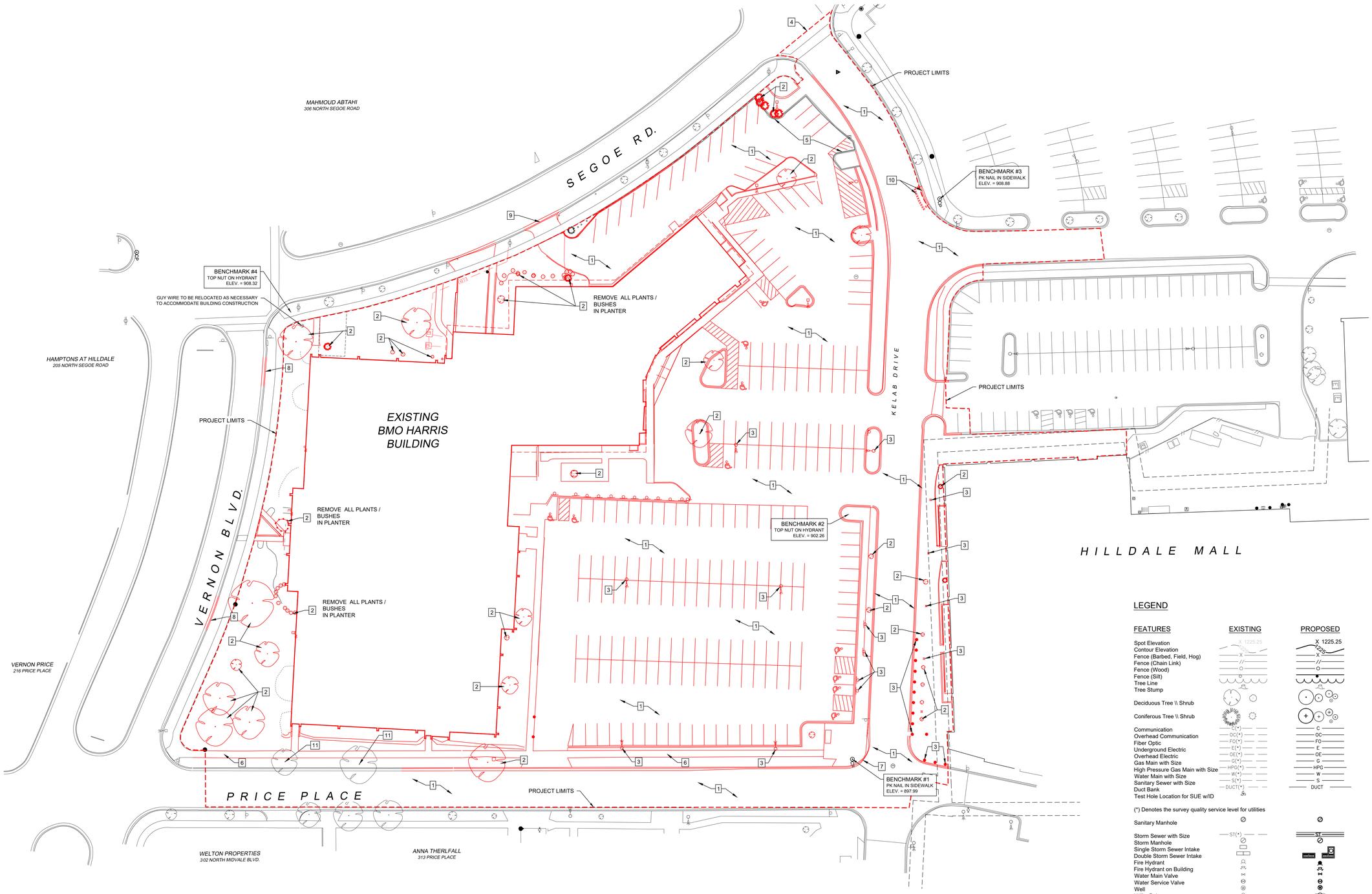

SITE PLAN KEYNOTES

1. EXISTING CONCRETE AND ASPHALT PAVEMENT TO BE REMOVED
2. EXISTING VEGETATION TO INCLUDE TREES AND SHRUBS TO BE REMOVED
3. EXISTING MISC. SITE AMENITIES TO BE REMOVED (BOLLARDS, LIGHT POLES, SIGNS, ETC.)
4. SAW CUT EXISTING PAVEMENT FOR A CLEAN MATCH LINE
5. EXISTING CONCRETE RETAINING WALL TO REMAIN
6. REMOVE EXISTING SIDEWALK
7. REMOVE EXISTING CURB RETURNS
8. EXISTING CURB TO BE SAWCUT FOR NEW DRIVEWAY ENTRANCE
9. EXISTING DRIVEWAY APRON TO BE REMOVED, SAW CUT EXISTING CURB AND AND INFILL WITH NEW CURB & GUTTER
10. EXISTING CURB AND PAVEMENT TO BE REMOVED TO INSTALL NEW CURB INLET
11. INSTALL TREE PROTECTION AS SHOWN IN DETAIL ON SHEET C504

UTILITY QUALITY SERVICE LEVELS

QUALITY LEVELS OF UTILITIES ARE SHOWN IN THE PARENTHESES WITH THE UTILITY TYPE AND WHEN APPLICABLE, SIZE. THE QUALITY LEVELS ARE BASED ON THE CI / ASCE 38-02 STANDARD.

QUALITY LEVEL (D) INFORMATION IS DERIVED FROM EXISTING UTILITY RECORDS OR ORAL RECOLLECTIONS.

QUALITY LEVEL (C) INFORMATION IS OBTAINED BY SURVEYING AND PLOTTING VISIBLE ABOVE-GROUND UTILITY FEATURES AND USING PROFESSIONAL JUDGMENT IN CORRELATING THIS INFORMATION WITH QUALITY D INFORMATION.

QUALITY LEVEL (B) INFORMATION IS OBTAINED THROUGH THE APPLICATION OF APPROPRIATE SURFACE GEOPHYSICAL METHODS TO DETERMINE THE EXISTENCE AND APPROXIMATE HORIZONTAL POSITION OF SUBSURFACE UTILITIES.

QUALITY LEVEL (A) IS HORIZONTAL AND VERTICAL POSITION OF UNDERGROUND UTILITIES OBTAINED BY ACTUAL EXPOSURE OR VERIFICATION OF PREVIOUSLY EXPOSED SUBSURFACE UTILITIES, AS WELL AS THE TYPE, SIZE, CONDITION, MATERIAL, AND OTHER CHARACTERISTICS.

UTILITY WARNING

THE UTILITIES SHOWN HAVE BEEN LOCATED FROM FIELD SURVEY INFORMATION AND/OR RECORDS OBTAINED. THE SURVEYOR MAKES NO GUARANTEE THAT THE UTILITIES OR SUBSURFACE FEATURES SHOWN COMPRISE ALL SUCH ITEMS IN THE AREA, EITHER IN SERVICE OR ABANDONED. THE SURVEYOR FURTHER DOES NOT WARRANT THAT THE UTILITIES OR SUBSURFACE FEATURES SHOWN ARE IN THE EXACT LOCATION INDICATED EXCEPT WHERE NOTED AS QUALITY LEVEL A.

0 30
FEET

TO OBTAIN LOCATION OF PARTICIPANTS' UNDERGROUND FACILITIES BEFORE YOU DIG IN WISCONSIN

CALL DIGGERS HOTLINE
1-800-242-8511
TOLL FREE

WIS. STATUTE 182.0175 (1974) REQUIRES MIN. OF 3 WORK DAYS NOTICE BEFORE YOU EXCAVATE

LEGEND

FEATURES	EXISTING	PROPOSED
Spot Elevation	X 1225.25	X 1225.25
Contour Elevation		
Fence (Barbed, Field, Hog)	X	X
Fence (Chain Link)	//	//
Fence (Wood)	O	O
Fence (Silt)		
Tree Line		
Tree Stump		
Deciduous Tree \\ Shrub		
Coniferous Tree \\ Shrub		
Communication	C(*)	C
Overhead Communication	OC(*)	OC
Fiber Optic	FO(*)	FO
Underground Electric	E(*)	E
Overhead Electric	OE(*)	OE
Gas Main with Size	G(*)	G
High Pressure Gas Main with Size	HPG(*)	HPG
Water Main with Size	W(*)	W
Sanitary Sewer with Size	S(*)	S
Duct Bank	DUCT(*)	DUCT
Test Hole Location for SUE w/ID		
(*) Denotes the survey quality service level for utilities		
Sanitary Manhole		
Storm Sewer with Size	ST(*)	
Storm Manhole		
Single Storm Sewer Intake		
Double Storm Sewer Intake		
Fire Hydrant		
Fire Hydrant on Building		
Water Main Valve		
Water Service Valve		
Well		
Utility Pole		
Guy Anchor		
Utility Pole with Light		
Utility Pole with Transformer		
Street Light		
Yard Light		
Electric Box	EB	EB
Electric Transformer		
Traffic Sign		
Communication Pedestal		
Communication Manhole	C	C
Communication Handhole	CH	CH
Fiber Optic Manhole	FO	FO
Fiber Optic Handhole	FOH	FOH
Gas Valve		
Gas Manhole	G	G
Gas Apparatus		
Fence Post or Guard Post		
Underground Storage Tank	UST	
Above Ground Storage Tank	AST	
Sign		
Satellite Dish		
Mailbox		
Sprinkler Head		
Irrigation Control Valve	HCV	HCV
Soil Boring	B-2	
Elevation	EL: 1225.25	EL: 1225.25

eppstein uhen : architects
milwaukee 333 East Chicago Street Milwaukee, Wisconsin 53202 telephone 414.271.5350
madison 309 West Johnson Street, Suite 202 Madison, Wisconsin 53703 telephone 608.442.5350

WS DEVELOPMENT
33 BOYLSTON ST, STE 3000
CHESTNUT HILL, MA 02467
P 617.232.8900

SNYDER & ASSOCIATES
5010 VOGES ROAD
MADISON, WISCONSIN 53718
608-838-0444

PROJECT INFORMATION

HILLDALE SHOPPING CENTER

HILLDALE

702 N Midvale Blvd
Madison, WI 53705

ISSUANCE AND REVISIONS

#	DATE	DESCRIPTION
	3/13/2023	CITY SUBMITTAL

KEY PLAN

SHEET INFORMATION

PROJECT MANAGER SJA

PROJECT NUMBER 120.0311.30

EXISTING SITE & DEMOLITION PLAN

C 100

© Eppstein Uhen Architects, Inc.

V:\Projects\2020\120.0311.30\CAD\120.0311.30 P100.dwg ANDREW BERGMANN, EXISTING SITE & DEMOLITION PLAN, 2023/03/10, 4:24 PM, ARCH FULL BLEED E1 (36.00 X 42.00 INCHES)

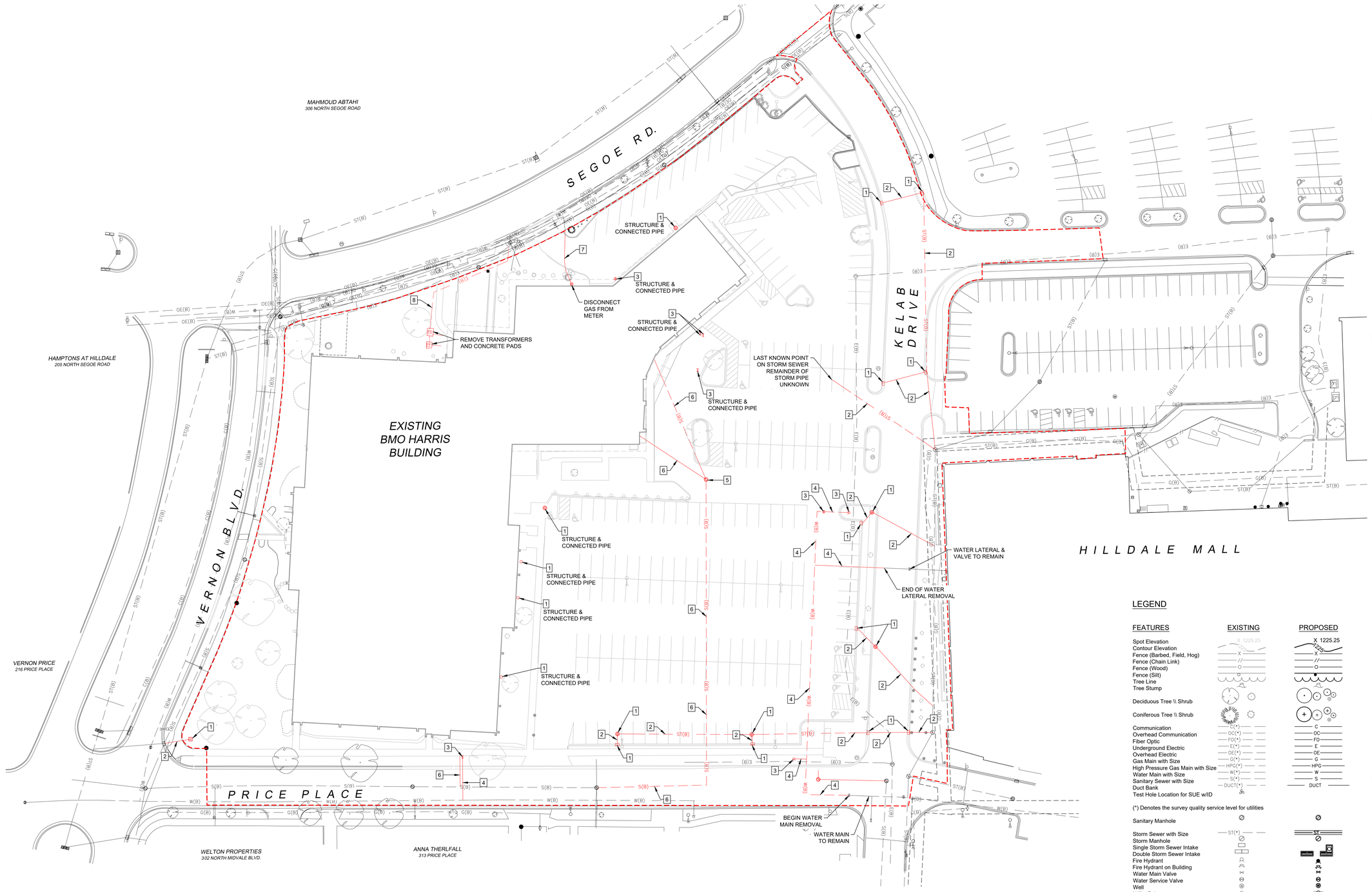

SITE PLAN KEYNOTES

1. EXISTING STORM SEWER STRUCTURE TO BE REMOVED
2. EXISTING STORM SEWER PIPE TO BE REMOVED
3. EXISTING WATER STRUCTURE TO BE REMOVED
4. EXISTING WATER PIPE / LATERAL TO BE REMOVED
5. EXISTING SANITARY STRUCTURE TO BE REMOVED
6. EXISTING SANITARY PIPE / LATERAL TO BE REMOVED
7. EXISTING GAS PIPE TO BE REMOVED AND CAPPED PER DIRECTION OF THE UTILITY PROVIDER
8. EXISTING BURIED ELECTRIC TO BE REMOVED PER DIRECTION OF THE UTILITY PROVIDER

UTILITY QUALITY SERVICE LEVELS

QUALITY LEVELS OF UTILITIES ARE SHOWN IN THE PARENTHESES WITH THE UTILITY TYPE AND WHEN APPLICABLE, SIZE. THE QUALITY LEVELS ARE BASED ON THE CI / ASCE 38-02 STANDARD.

QUALITY LEVEL (D) INFORMATION IS DERIVED FROM EXISTING UTILITY RECORDS OR ORAL RECOLLECTIONS.

QUALITY LEVEL (C) INFORMATION IS OBTAINED BY SURVEYING AND PLOTTING VISIBLE ABOVE-GROUND UTILITY FEATURES AND USING PROFESSIONAL JUDGMENT IN CORRELATING THIS INFORMATION WITH QUALITY D INFORMATION.

QUALITY LEVEL (B) INFORMATION IS OBTAINED THROUGH THE APPLICATION OF APPROPRIATE SURFACE GEOPHYSICAL METHODS TO DETERMINE THE EXISTENCE AND APPROXIMATE HORIZONTAL POSITION OF SUBSURFACE UTILITIES.

QUALITY LEVEL (A) IS HORIZONTAL AND VERTICAL POSITION OF UNDERGROUND UTILITIES OBTAINED BY ACTUAL EXPOSURE OR VERIFICATION OF PREVIOUSLY EXPOSED SUBSURFACE UTILITIES, AS WELL AS THE TYPE, SIZE, CONDITION, MATERIAL, AND OTHER CHARACTERISTICS.

UTILITY WARNING

THE UTILITIES SHOWN HAVE BEEN LOCATED FROM FIELD SURVEY INFORMATION AND/OR RECORDS OBTAINED. THE SURVEYOR MAKES NO GUARANTEE THAT THE UTILITIES OR SUBSURFACE FEATURES SHOWN COMPRISE ALL SUCH ITEMS IN THE AREA, EITHER IN SERVICE OR ABANDONED. THE SURVEYOR FURTHER DOES NOT WARRANT THAT THE UTILITIES OR SUBSURFACE FEATURES SHOWN ARE IN THE EXACT LOCATION INDICATED EXCEPT WHERE NOTED AS QUALITY LEVEL A.

CONTRACTOR SHALL HAVE ALL UTILITIES LOCATED BOTH PUBLIC AND PRIVATE PRIOR TO THE START OF WORK BEING DONE ONSITE.

0 30 FEET

TO OBTAIN LOCATION OF PARTICIPANTS' UNDERGROUND FACILITIES BEFORE YOU DIG IN WISCONSIN

CALL DIGGERS HOTLINE
1-800-242-8511
TOLL FREE

WIS. STATUTE 182.0175 (1974) REQUIRES MIN. OF 3 WORK DAYS NOTICE BEFORE YOU EXCAVATE

LEGEND

FEATURES	EXISTING	PROPOSED
Spot Elevation	X 1225.25	X 1225.25
Contour Elevation		1225
Fence (Barbed, Field, Hog)	X	X
Fence (Chain Link)	//	//
Fence (Wood)	O	O
Fence (Silt)		
Tree Line		
Tree Stump		
Deciduous Tree \\ Shrub		
Coniferous Tree \\ Shrub		
Communication	C(*)	C
Overhead Communication	OC(*)	OC
Fiber Optic	FO(*)	FO
Underground Electric	E(*)	E
Overhead Electric	OE(*)	OE
Gas Main with Size	G(*)	G
High Pressure Gas Main with Size	HPG(*)	HPG
Water Main with Size	W(*)	W
Sanitary Sewer with Size	S(*)	S
Duct Bank	DUCT(*)	DUCT
Test Hole Location for SUE w/ID		

(*) Denotes the survey quality service level for utilities

Sanitary Manhole		
Storm Sewer with Size	ST(*)	ST
Storm Manhole		
Single Storm Sewer Intake		
Double Storm Sewer Intake		
Fire Hydrant		
Fire Hydrant on Building		
Water Main Valve		
Water Service Valve		
Well		
Utility Pole		
Guy Anchor		
Utility Pole with Light		
Utility Pole with Transformer		
Street Light		
Yard Light		
Electric Box		
Electric Transformer		
Traffic Sign		
Communication Pedestal		
Communication Manhole		
Communication Handhole		
Fiber Optic Manhole		
Fiber Optic Handhole		
Gas Valve		
Gas Manhole		
Gas Apparatus		
Fence Post or Guard Post		
Underground Storage Tank	UST	
Above Ground Storage Tank	AST	
Sign		
Satellite Dish		
Mailbox		
Sprinkler Head		
Irrigation Control Valve	HCV	HCV
Soil Boring	B-2	
Elevation	EL: 1225.25	EL: 1225.25

eppstein uhen : architects
milwaukee 333 East Chicago Street Milwaukee, Wisconsin 53202 telephone 414.271.5350
madison 309 West Johnson Street, Suite 202 Madison, Wisconsin 53703 telephone 608.442.5350

WS DEVELOPMENT
33 BOYLSTON ST, STE 3000
CHESTNUT HILL, MA 02467
P 617.232.8900

SNYDER & ASSOCIATES
5010 VOGES ROAD
MADISON, WISCONSIN 53718
608-838-0444

PROJECT INFORMATION

HILLDALE SHOPPING CENTER

HILLDALE

702 N Midvale Blvd
Madison, WI 53705

ISSUANCE AND REVISIONS

#	DATE	DESCRIPTION
	3/13/2023	CITY SUBMITTAL

KEY PLAN

SHEET INFORMATION

PROJECT MANAGER	SJA
PROJECT NUMBER	120.0311.30

EXISTING UTILITY DEMOLITION PLAN

C 101

© Eppstein Uhen Architects, Inc.

V:\Projects\2020\120.0311.30\CAD\120.0311.30 P100.dwg ANDREW BERGMANN, UTILITY DEMOLITION PLAN, 2023/03/10, 4:24 PM, ARCH FULL BLEED D1 (36.00 X 42.00 INCHES)

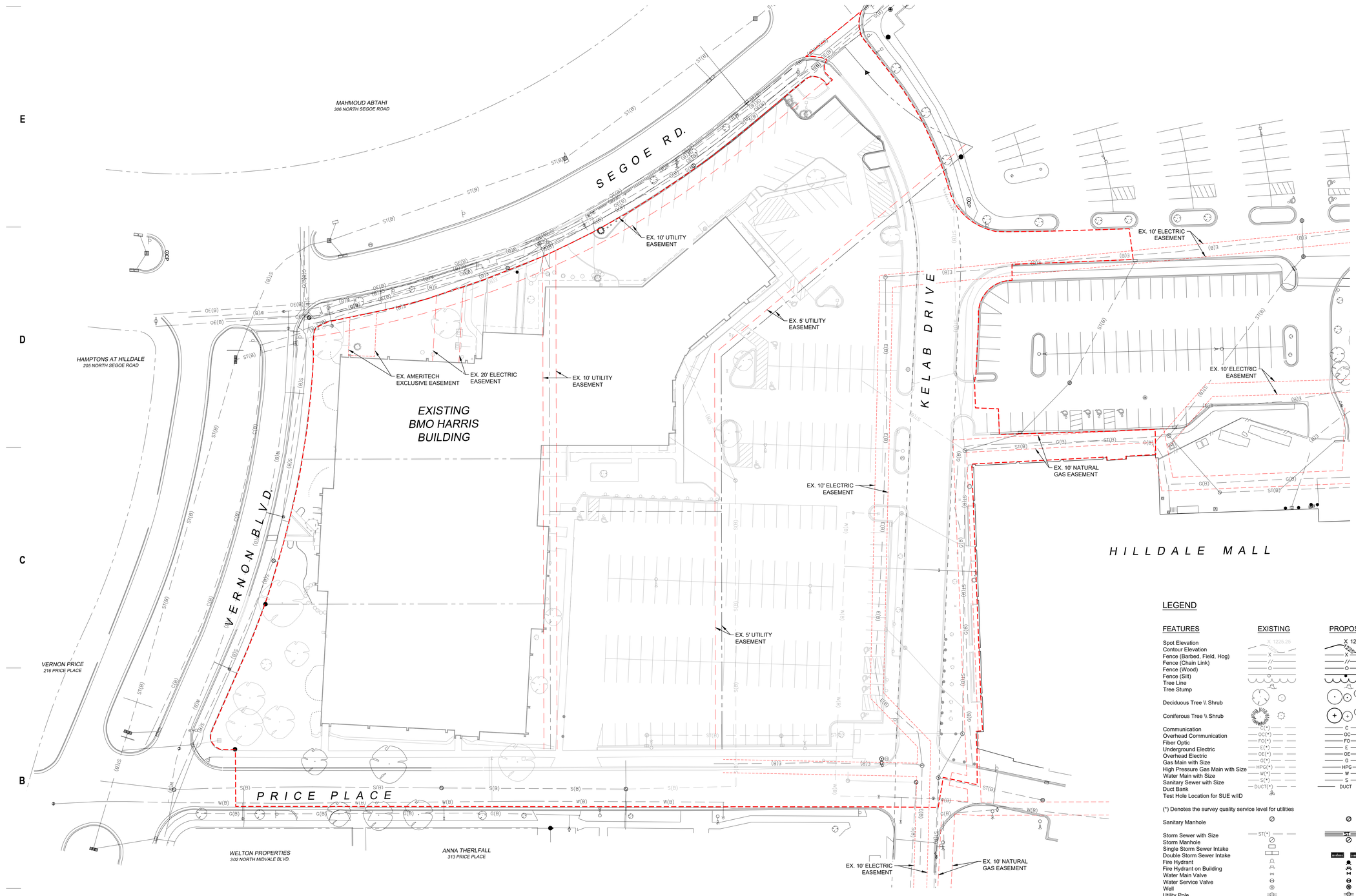

TO OBTAIN LOCATION OF PARTICIPANTS' UNDERGROUND FACILITIES BEFORE YOU DIG IN WISCONSIN

CALL DIGGERS HOTLINE
1-800-242-8511
TOLL FREE

WIS. STATUTE 182.0175 (1974) REQUIRES MIN. OF 3 WORK DAYS NOTICE BEFORE YOU EXCAVATE

LEGEND

FEATURES	EXISTING	PROPOSED
Spot Elevation	X 1225.25	X 1225.25
Contour Elevation		
Fence (Barbed, Field, Hog)	X	X
Fence (Chain Link)	//	//
Fence (Wood)	O	O
Fence (Silt)		
Tree Line		
Tree Stump		
Deciduous Tree \\ Shrub		
Coniferous Tree \\ Shrub		
Communication	C(*)	C
Overhead Communication	OC(*)	OC
Fiber Optic	FO(*)	FO
Underground Electric	E(*)	E
Overhead Electric	OE(*)	OE
Gas Main with Size	G(*)	G
High Pressure Gas Main with Size	HPG(*)	HPG
Water Main with Size	W(*)	W
Sanitary Sewer with Size	S(*)	S
Duct Bank	DUCT(*)	DUCT
Test Hole Location for SUE w/ID		
(*) Denotes the survey quality service level for utilities		
Sanitary Manhole		
Storm Sewer with Size	ST(*)	ST
Storm Manhole		
Single Storm Sewer Intake		
Double Storm Sewer Intake		
Fire Hydrant		
Fire Hydrant on Building		
Water Main Valve		
Water Service Valve		
Well		
Utility Pole		
Guy Anchor		
Utility Pole with Light		
Utility Pole with Transformer		
Street Light		
Yard Light		
Electric Box		
Electric Transformer		
Traffic Sign		
Communication Pedestal		
Communication Manhole		
Communication Handhole		
Fiber Optic Manhole		
Fiber Optic Handhole		
Gas Valve		
Gas Manhole		
Gas Apparatus		
Fence Post or Guard Post		
Underground Storage Tank	UST	
Above Ground Storage Tank	AST	
Sign		
Satellite Dish		
Mailbox		
Sprinkler Head		
Irrigation Control Valve	HICV	HICV
Soil Boring	B-2	
Elevation	EL: 1225.25	EL: 1225.25

eppstein uhen : architects

milwaukee 333 East Chicago Street Milwaukee, Wisconsin 53202 telephone 414.271.5350

madison 309 West Johnson Street, Suite 202 Madison, Wisconsin 53703 telephone 608.442.5350

WS DEVELOPMENT
33 BOYLSTON ST, STE 3000
CHESTNUT HILL, MA 02467
P 617.232.8900

SNYDER & ASSOCIATES
5010 VOGES ROAD
MADISON, WISCONSIN 53718
608-838-0444

PROJECT INFORMATION

HILLDALE SHOPPING CENTER

HILLDALE

702 N Midvale Blvd
Madison, WI 53705

ISSUANCE AND REVISIONS

#	DATE	DESCRIPTION
	3/13/2023	CITY SUBMITTAL

KEY PLAN

SHEET INFORMATION

PROJECT MANAGER	SJA
PROJECT NUMBER	120.0311.30

EXISTING EASEMENTS

C 102

© Eppstein Uhen Architects, Inc.

V:\Projects\2020\120.0311.30\CAD\120.0311.30-P100.dwg ANDREW BERGMANN, EXISTING EASEMENTS, 2023/03/10, 4:24 PM, ARCH FULL BLEED E1 (30.00) X 42.00 INCHES)

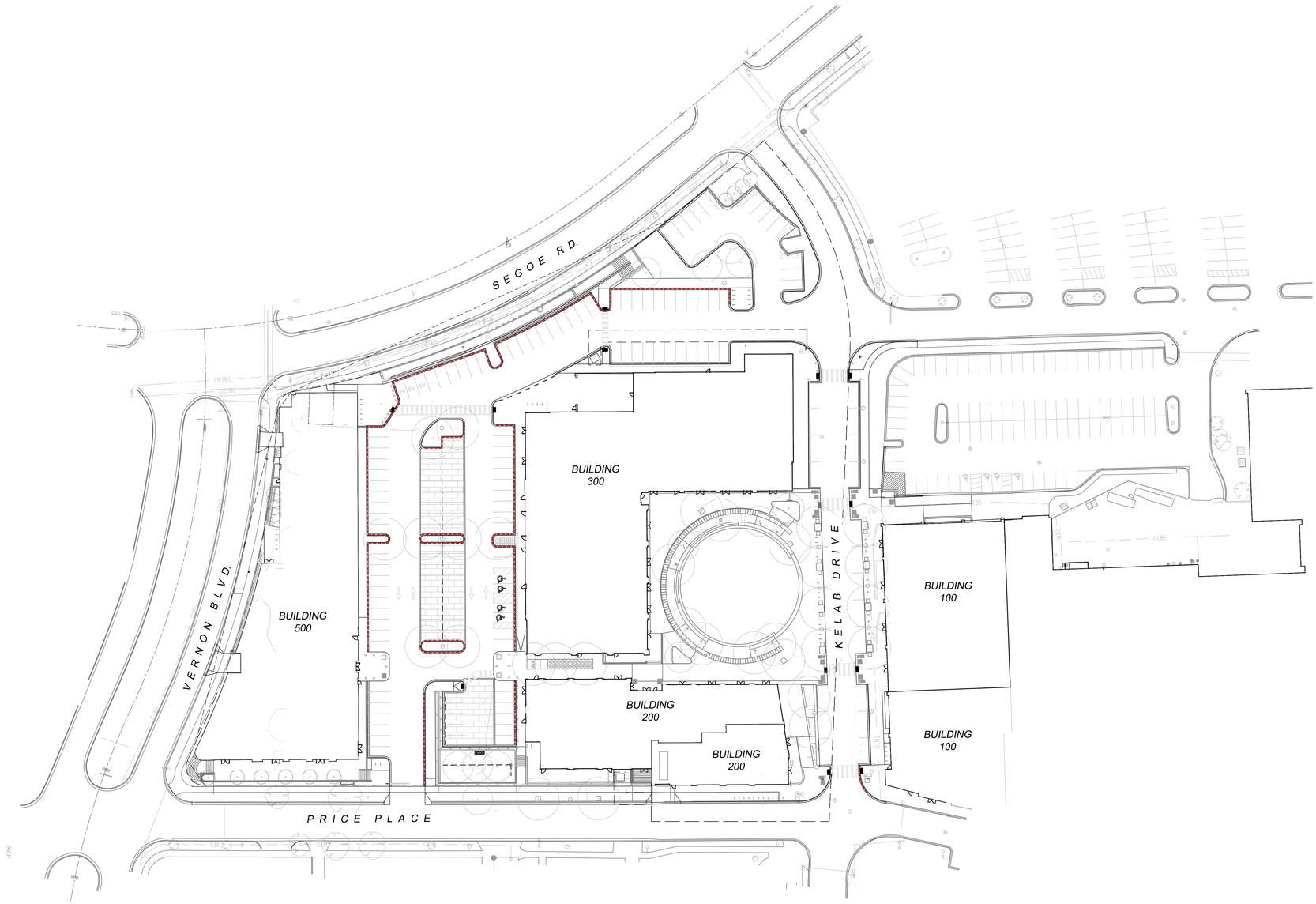

SITE INFORMATION

TOTAL SITE AREA: 221,647 SF / 5.09 ACRES

EXISTING IMPERVIOUS AREA: 184,807 SF

NEW IMPERVIOUS AREA: 27,403 SF (12.36% LOT COVERAGE)

REDEVELOPED IMPERVIOUS AREA: 173,193 SF

REMOVED IMPERVIOUS AREA: 19,614 SF

NET IMPERVIOUS AREA: 192,596 SF

PARKING STALL COUNT

TOTAL EXISTING SITE PARKING:	296 STALLS
TOTAL PROPOSED SITE PARKING:	234 STALLS
TOTAL HANDICAP PARKING:	8 STALLS (3 VAN)
TOTAL ELECTRIC VEHICLE PARKING:	3 STALLS

PROPOSED REDUCTION OF 62 PARKING STALLS

BIKE PARKING COUNT

PARKING CALC'S FOR BUILDING 100, BUILDING 200, BUILDING 300, AND BUILDING 500

BUILDING 500 - RESIDENTIAL
125 STALLS TOTAL (UNIT PLUS GUESTS)
103 STALLS LONG TERM 90% (IN BUILDING)
22 EXTERIOR BIKE STALLS BY BUILDING 500

BUILDINGS 100, 200 & 300 - RETAIL / RESTAURANT
RETAIL = (99,785 SF) / 2,000 SF PER BIKE STALL = 50 STALLS
RESTAURANT = (13,075 SF) / (15 SF PER PERSON)*0.5 = 44 STALLS
94 BIKE

FIRE LANE:

SEVERAL ROADS WILL ACT AS THE FIRE LANE ON THIS PROJECT, SEE SHEET C 204 FOR MORE INFORMATION.

NOTE:

CONTRACTOR SHALL FIELD VERIFY ALL EXISTING UTILITIES ON AND ADJACENT TO THE SITE PRIOR TO THE START OF THE PROJECT.

RADII ARE FROM FACE OF CURB

DIMENSIONS ARE FROM FACE OF CURB

0 40
FEET

TO OBTAIN LOCATION OF PARTICIPANTS' UNDERGROUND FACILITIES BEFORE YOU DIG IN WISCONSIN

CALL DIGGERS HOTLINE
1-800-242-8511
TOLL FREE

WIS. STATUTE 182.0175 (1974)
REQUIRES MIN. OF 3 WORK DAYS
NOTICE BEFORE YOU EXCAVATE

eppstein uhen : architects

milwaukee 333 East Chicago Street Milwaukee, Wisconsin 53202 telephone 414.271.5350

madison 309 West Johnson Street, Suite 202 Madison, Wisconsin 53703 telephone 608.442.5350

WS DEVELOPMENT
33 BOYLSTON ST., STE 3000
CHESTNUT HILL, MA 02467
P 617.232.8900

SNYDER & ASSOCIATES
5010 VOGES ROAD
MADISON, WISCONSIN 53718
608-838-0444

PROJECT INFORMATION

HILLDALE SHOPPING CENTER

HILLDALE

702 N Midvale Blvd
Madison, WI 53705

ISSUANCE AND REVISIONS

#	DATE	DESCRIPTION
	3/13/2023	CITY SUBMITTAL

KEY PLAN

SHEET INFORMATION

PROJECT MANAGER SJA

PROJECT NUMBER 120.0311.30

OVERALL SITE PLAN

C 200

© Eppstein Uhen Architects, Inc.

V:\Projects\2020\120.0311.30\CAD\120.0311.30 P200.dwg MIKE WAHL OVERALL SITE PLAN, 2023/03/10, 4:44 PM, ARCH FULL BLEED E1 (30.00 X 42.00 INCHES)

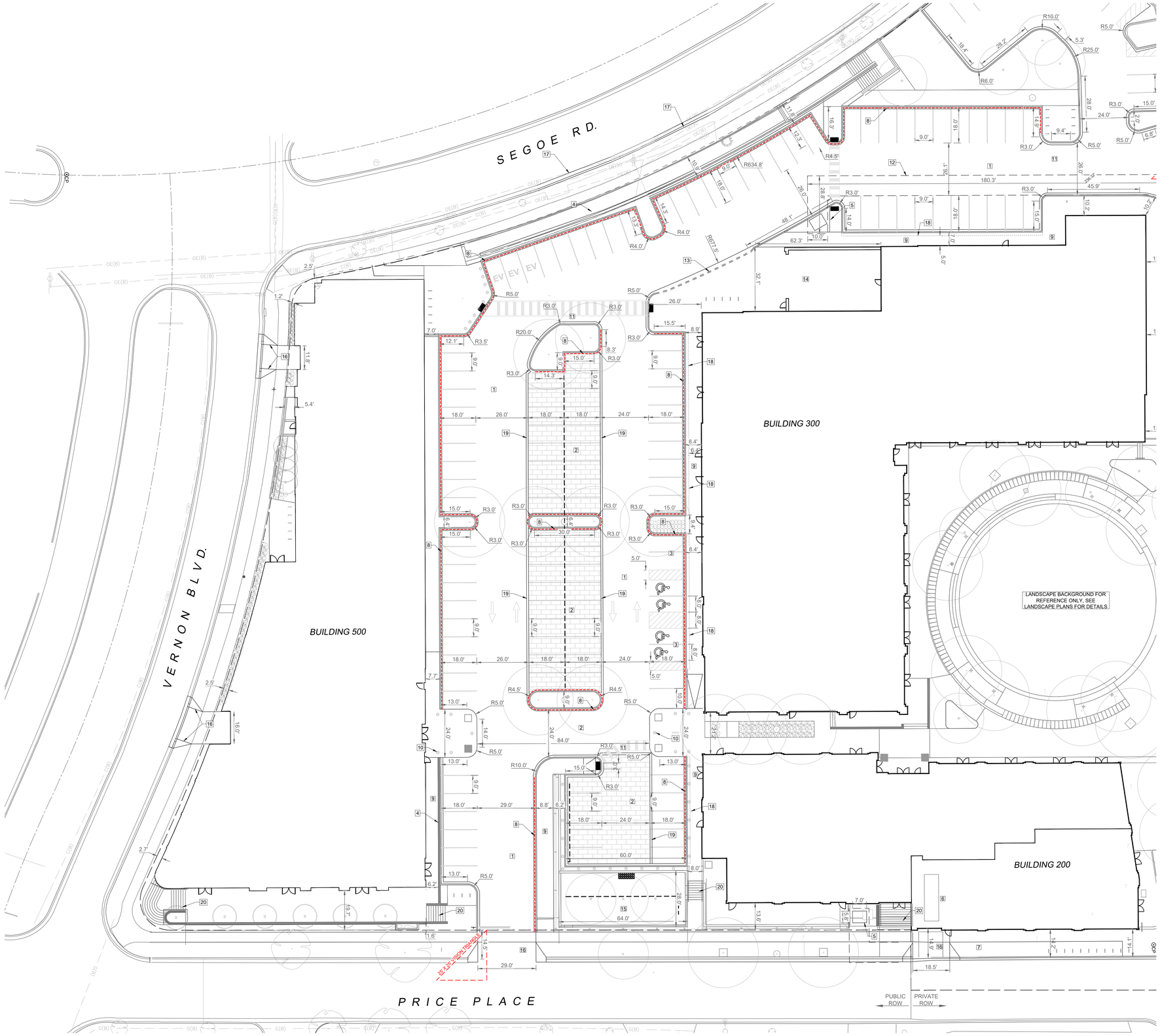

SITE PLAN KEYNOTES

1. PROPOSED ASPHALT PAVEMENT
2. PROPOSED PERMEABLE PAVERS
3. A.D.A. ACCESSIBLE PARKING SPACE WITH LOADING ZONE. PROVIDE APPROPRIATE STRIPING AND PAVEMENT MARKINGS.
4. PROPOSED RETAINING WALL - CAST IN PLACE BY OTHERS
5. PROPOSED TRANSFORMER LOCATION. EXACT DIMENSIONS TBD.
6. PROPOSED REFUSE AND RECYCLING COMPACTORS
7. EXISTING MG&E EASEMENT AND DUCT BANK
8. REJECT CURB
9. PROPOSED SIDEWALK, 5" THICK
10. PROPOSED BOLLARDS
11. PROPOSED CROSSWALK
12. PROPOSED ELECTRIC EASEMENT
13. 30" MOUNTABLE CURB AND GUTTER, SEE DETAIL 2 ON C 504
14. PROPOSED 7" THICK CONCRETE LOADING AREA, SEE DETAIL ON C 504
15. BIORETENTION AREA, SEE DETAIL ON C 503
16. DRIVEWAY APRON, SEE DETAIL ON C 504
17. POUR NEW CURB AND GUTTER TO INFILL PREVIOUS DRIVEWAY APRON
18. PARKING OVERHANG OF 24"
19. 12" CONCRETE RIBBON CURB, SEE DETAIL ON SHEET C 504
20. CONCRETE STEPS AND RAILINGS BY OTHERS

eppstein uhen : architects

milwaukee 333 East Chicago Street Milwaukee, Wisconsin 53202 telephone 414.271.5350

madison 309 West Johnson Street, Suite 202 Madison, Wisconsin 53703 telephone 608.442.5350

WS DEVELOPMENT
33 BOYLSTON ST, STE 3000
CHESTNUT HILL, MA 02467
P 617.232.8900

SNYDER & ASSOCIATES
5010 VOGES ROAD
MADISON, WISCONSIN 53718
608-838-0444

PROJECT INFORMATION

HILLDALE SHOPPING CENTER

HILLDALE

702 N Midvale Blvd
Madison, WI 53705

ISSUANCE AND REVISIONS

#	DATE	DESCRIPTION
	3/13/2023	CITY SUBMITTAL

KEY PLAN

SHEET INFORMATION

0 20 FEET

PROJECT MANAGER	SJA
PROJECT NUMBER	120.0311.30

TO OBTAIN LOCATION OF PARTICIPANTS' UNDERGROUND FACILITIES BEFORE YOU DIG IN WISCONSIN
CALL DIGGERS HOTLINE
1-800-242-8511
TOLL FREE
WIS. STATUTE 182.0175 (1974) REQUIRES MIN. OF 3 WORK DAYS NOTICE BEFORE YOU EXCAVATE

SITE PLAN

C 201

© Eppstein Uhen Architects, Inc.

V:\Projects\2020\120.0311.30\CAD\0120.0311.30 P200.dwg MIKE WAHL, SITE PLAN, 2023/03/10, 4:46 PM, ARCH FULL BLEED E1 (30.00 X 42.00 INCHES)

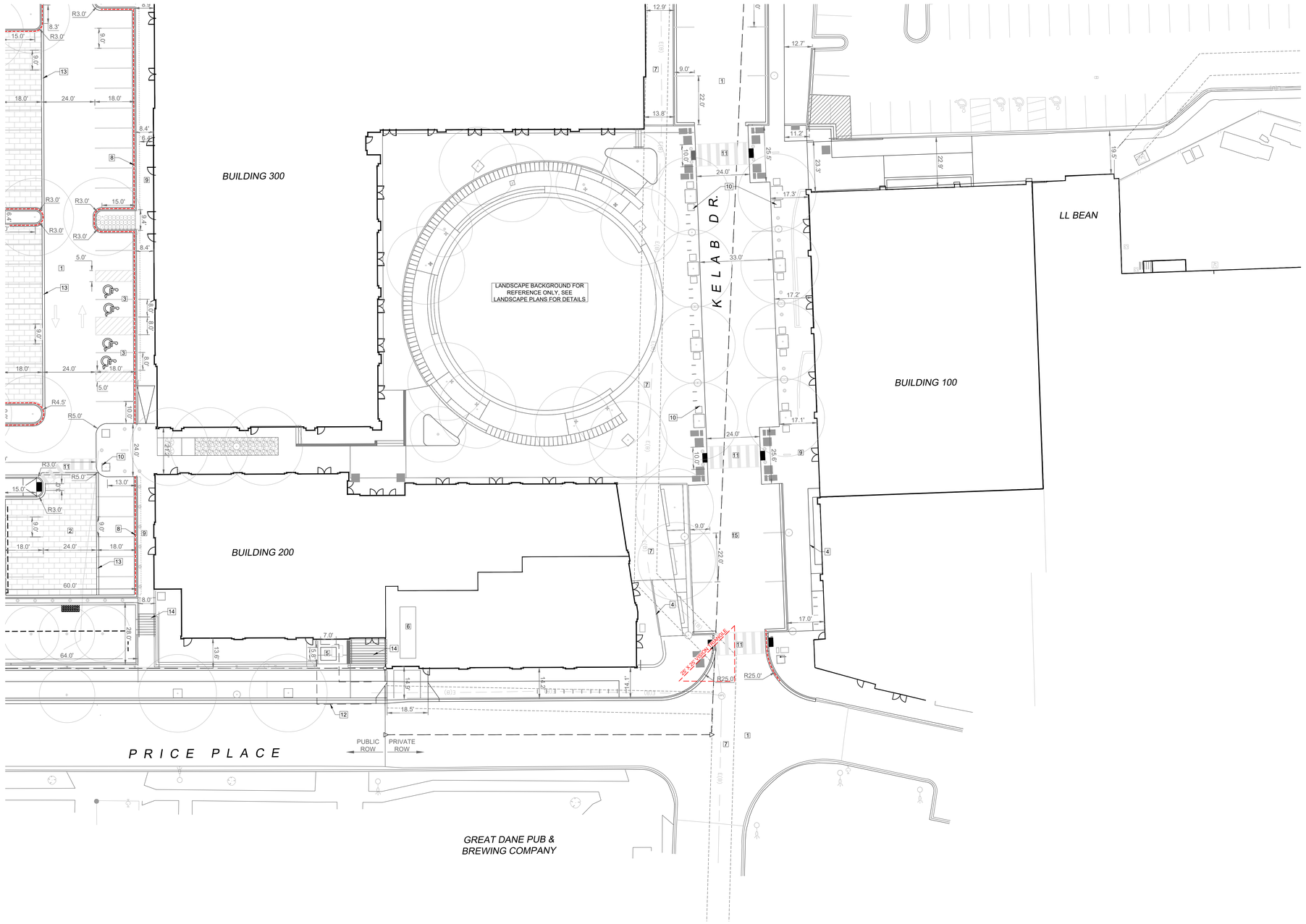

SITE PLAN KEYNOTES

1. PROPOSED ASPHALT PAVEMENT
2. PROPOSED PERMEABLE PAVERS
3. A.D.A. ACCESSIBLE PARKING SPACE WITH LOADING ZONE. PROVIDE APPROPRIATE STRIPING AND PAVEMENT MARKINGS.
4. PROPOSED RETAINING WALL - CAST IN PLACE BY OTHERS
5. PROPOSED TRANSFORMER LOCATION. EXACT DIMENSIONS TBD.
6. PROPOSED REFUSE AND RECYCLING COMPACTORS
7. EXISTING MG&E EASEMENT AND DUCT BANK
8. REJECT CURB
9. PROPOSED SIDEWALK, 5" THICK
10. PROPOSED BOLLARDS
11. PROPOSED CROSSWALK
12. PROPOSED ELECTRIC EASEMENT
13. 12" CONCRETE RIBBON CURB, SEE DETAIL ON SHEET C 504
14. CONCRETE STEPS AND RAILINGS BY OTHERS
15. CONCRETE PAVEMENT

0 20
FEET

TO OBTAIN LOCATION OF PARTICIPANTS' UNDERGROUND FACILITIES BEFORE YOU DIG IN WISCONSIN
CALL DIGGERS HOTLINE
1-800-242-8511
TOLL FREE
WIS. STATUTE 182.0175 (1974) REQUIRES MIN. OF 3 WORK DAYS NOTICE BEFORE YOU EXCAVATE

eppstein uhen : architects
milwaukee 333 East Chicago Street Milwaukee, Wisconsin 53202 telephone 414 . 271 . 5350
madison 309 West Johnson Street, Suite 202 Madison, Wisconsin 53703 telephone 608 . 442 . 5350

WS DEVELOPMENT
33 BOYLSTON ST., STE 3000
CHESTNUT HILL, MA 02467
P 617.232.8900

SNYDER & ASSOCIATES
5010 VOGES ROAD
MADISON, WISCONSIN 53718
608-838-0444

PROJECT INFORMATION

HILLDALE SHOPPING CENTER

HILLDALE

702 N Midvale Blvd
Madison, WI 53705

ISSUANCE AND REVISIONS

#	DATE	DESCRIPTION
	3/13/2023	CITY SUBMITTAL

KEY PLAN

SHEET INFORMATION

PROJECT MANAGER SJA
PROJECT NUMBER 120.0311.30

SITE PLAN

C 202

© Eppstein Uhen Architects, Inc.

V:\Projects\2020\120.0311.30\CAD\D\120.0311.30 P200.dwg MIKE WAHL, SITE PLAN, 2023/03/10, 4:48 PM, ARCH FULL BLEED E1 (30.00 X 42.00 INCHES)

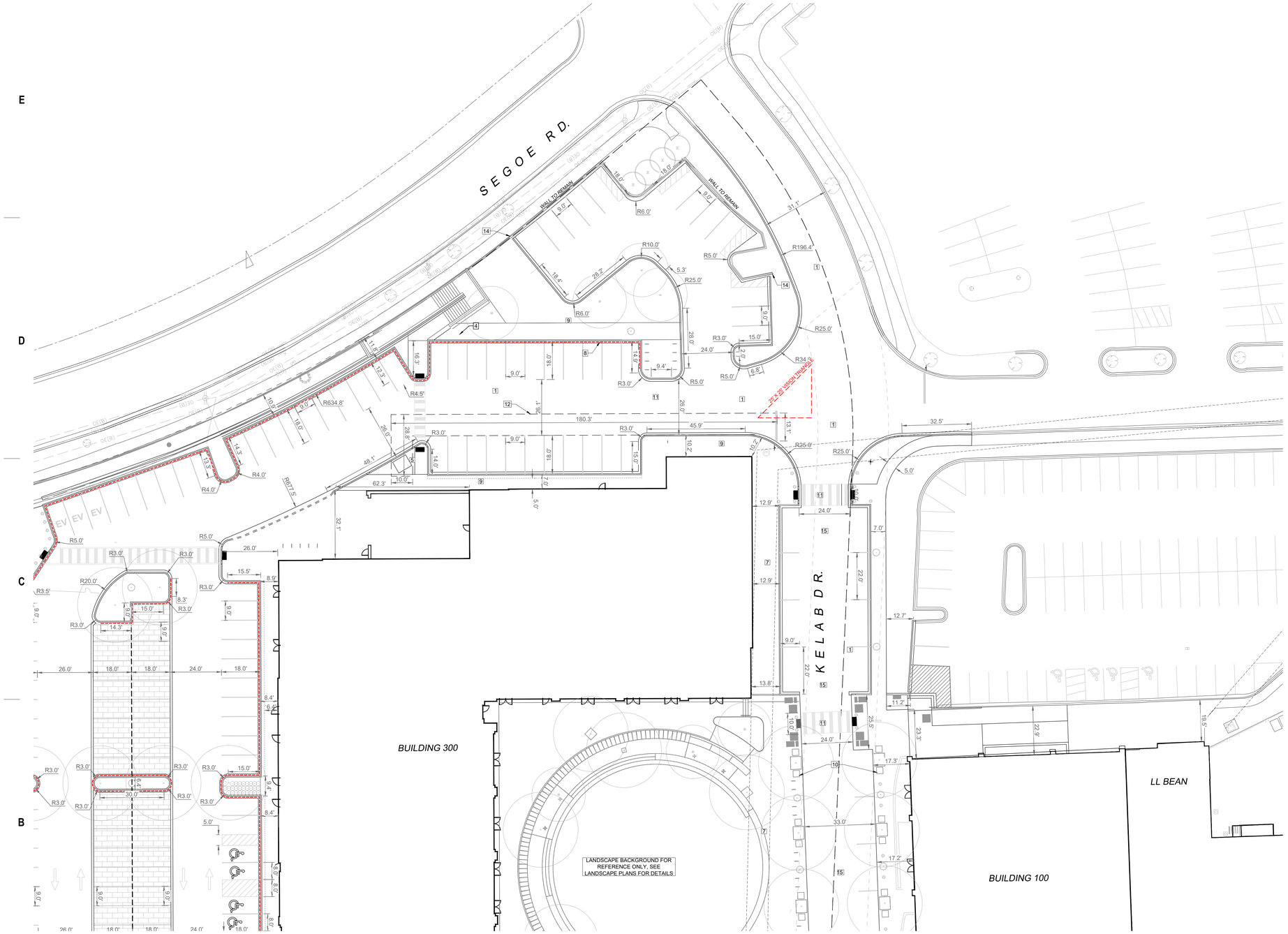

SITE PLAN KEYNOTES

1. PROPOSED ASPHALT PAVEMENT
2. PROPOSED PERMEABLE PAVERS
3. A.D.A. ACCESSIBLE PARKING SPACE WITH LOADING ZONE. PROVIDE APPROPRIATE STRIPING AND PAVEMENT MARKINGS.
4. PROPOSED RETAINING WALL, TYPE TBD
5. PROPOSED TRANSFORMER LOCATION. EXACT DIMENSIONS TBD.
6. PROPOSED REFUSE AND RECYCLING COMPACTORS
7. EXISTING MG&E EASEMENT AND DUCT BANK
8. REJECT CURB
9. PROPOSED SIDEWALK, 5" THICK
10. PROPOSED BOLLARDS
11. PROPOSED CROSSWALK
12. PROPOSED ELECTRIC EASEMENT
13. PROPOSED DRIVEWAY
14. A PORTION OF THE EXISTING RETAINING WALL TO REMAIN
15. CONCRETE PAVEMENT

0 20 FEET

TO OBTAIN LOCATION OF PARTICIPANTS' UNDERGROUND FACILITIES BEFORE YOU DIG IN WISCONSIN

CALL DIGGERS HOTLINE
1-800-242-8511
TOLL FREE

WIS. STATUTE 182.0175 (1974) REQUIRES MIN. OF 3 WORK DAYS NOTICE BEFORE YOU EXCAVATE

eppstein uhen : architects
milwaukee 333 East Chicago Street Milwaukee, Wisconsin 53202 telephone 414.271.5350
madison 309 West Johnson Street, Suite 202 Madison, Wisconsin 53703 telephone 608.442.5350

WS DEVELOPMENT
33 BOYLSTON ST., STE 3000
CHESTNUT HILL, MA 02467
P 617.232.8900

SNYDER & ASSOCIATES
5010 VOGES ROAD
MADISON, WISCONSIN 53718
608-838-0444

PROJECT INFORMATION

HILLDALE SHOPPING CENTER

HILLDALE

702 N Midvale Blvd
Madison, WI 53705

ISSUANCE AND REVISIONS

#	DATE	DESCRIPTION
	3/13/2023	CITY SUBMITTAL

KEY PLAN

SHEET INFORMATION

PROJECT MANAGER SJA
PROJECT NUMBER 120.0311.30

SITE PLAN

C 203

© Eppstein Uhen Architects, Inc.

V:\Projects\2020\120.0311.30\CAD\20120.0311.30 P200.dwg MIKE WAHL, SITE PLAN, 2023/03/10, 4:50 PM, ARCH FULL BLEED E1 (30.00 X 42.00 INCHES)

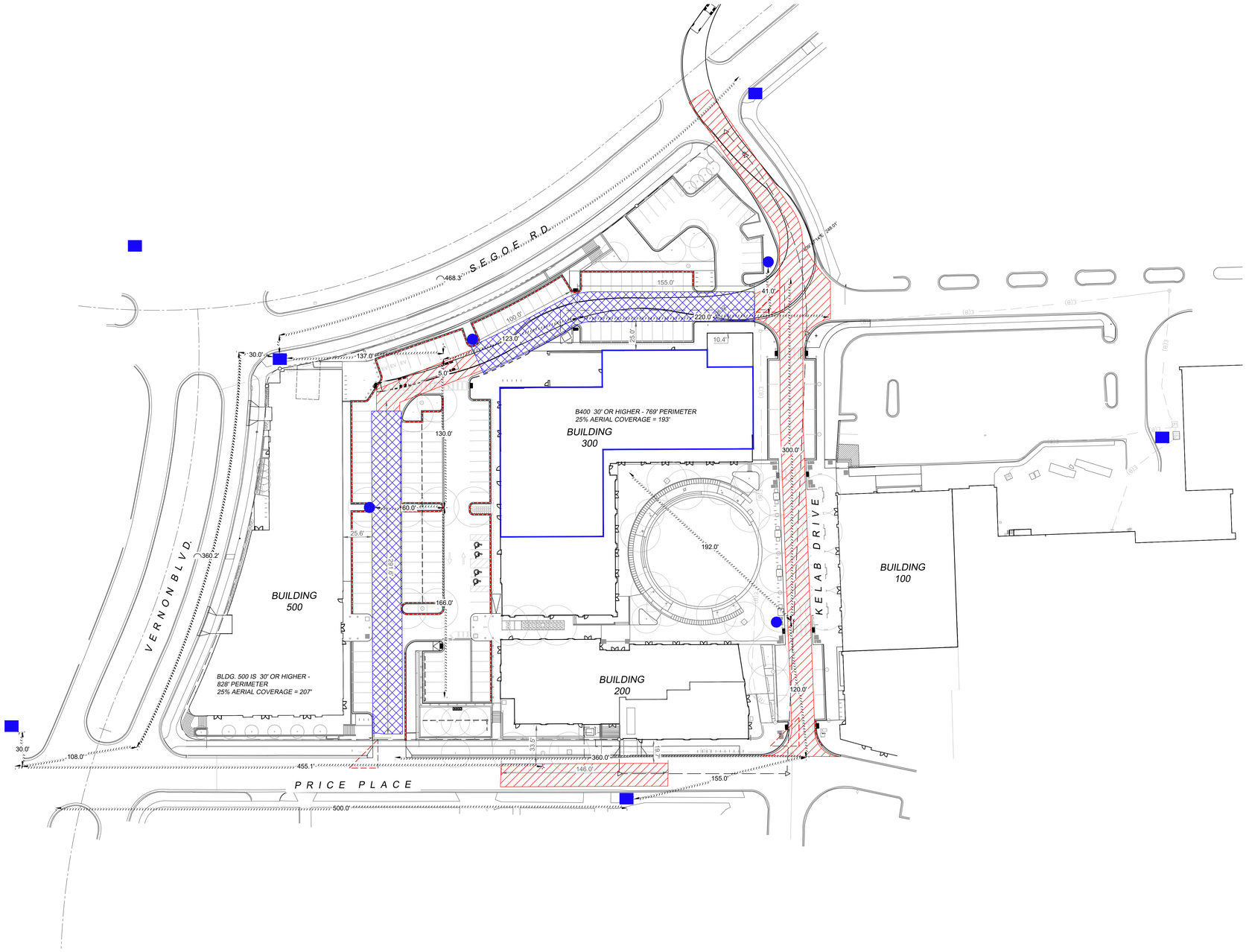

EXISTING HYDRANT LOCATION

PROPOSED HYDRANT LOCATION

26' WIDE FIRE LANE AERIAL APPARATUS

20' WIDE FIRE LANE

LENGTH

HOSE LAY

0 40
FEET

TO OBTAIN LOCATION OF PARTICIPANTS' UNDERGROUND FACILITIES BEFORE YOU DIG IN WISCONSIN

CALL DIGGERS HOTLINE
1-800-242-8511
TOLL FREE

WIS. STATUTE 182.0175 (1974) REQUIRES MIN. OF 3 WORK DAYS NOTICE BEFORE YOU EXCAVATE

eppstein uhen : architects

milwaukee 333 East Chicago Street Milwaukee, Wisconsin 53202 telephone 414.271.5350

madison 309 West Johnson Street, Suite 202 Madison, Wisconsin 53703 telephone 608.442.5350

WS DEVELOPMENT
33 BOYLSTON ST., STE 3000
CHESTNUT HILL, MA 02467
P 617.232.8900

SNYDER & ASSOCIATES
5010 VOGES ROAD
MADISON, WISCONSIN 53718
608-838-0444

PROJECT INFORMATION

HILLDALE SHOPPING CENTER

HILLDALE

702 N Midvale Blvd
Madison, WI 53705

ISSUANCE AND REVISIONS

#	DATE	DESCRIPTION
	3/13/2023	CITY SUBMITTAL

KEY PLAN

SHEET INFORMATION

PROJECT MANAGER SJA

PROJECT NUMBER 120.0311.30

FIRE ACCESS PLAN

C 204

© Eppstein Uhen Architects, Inc.

V:\Projects\2020\120.0311.30\CADD\120.0311.30 P200.dwg MIKE WAHL, FIRE ACCESS PLAN, 2023/03/10, 4:56 PM, ARCH FULL BLEED E1 (30.00 X 42.00 INCHES)

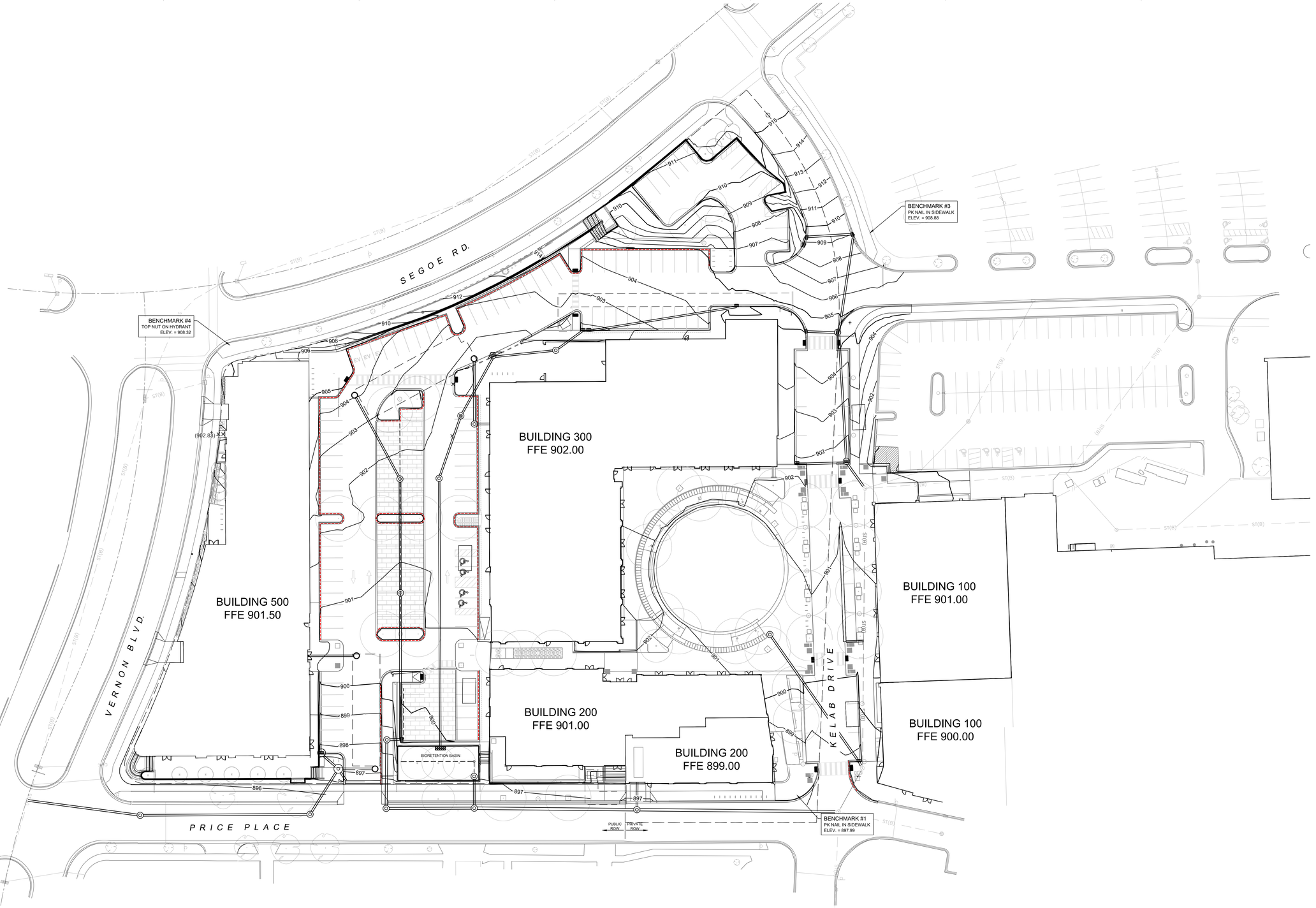

SITE INFORMATION

TOTAL SITE AREA: 221,647 SF / 5.09 ACRES
EXISTING IMPERVIOUS AREA: 184,807 SF
NEW IMPERVIOUS AREA: 27,403 SF (12.36% LOT COVERAGE)
REDEVELOPED IMPERVIOUS AREA: 173,193 SF
REMOVED IMPERVIOUS AREA: 19,614 SF
NET IMPERVIOUS AREA: 192,596 SF

0 30
FEET

TO OBTAIN LOCATION OF PARTICIPANTS' UNDERGROUND FACILITIES BEFORE YOU DIG IN WISCONSIN
CALL DIGGERS HOTLINE
1-800-242-8511
TOLL FREE
WIS. STATUTE 182.0175 (1974) REQUIRES MIN. OF 3 WORK DAYS NOTICE BEFORE YOU EXCAVATE

eppstein uhen : architects
milwaukee 333 East Chicago Street Milwaukee, Wisconsin 53202 telephone 414.271.5350
madison 309 West Johnson Street, Suite 202 Madison, Wisconsin 53703 telephone 608.442.5350

WS DEVELOPMENT
33 BOYLSTON ST, STE 3000
CHESTNUT HILL, MA 02467
P 617.232.8900

SNYDER & ASSOCIATES
5010 VOGES ROAD
MADISON, WISCONSIN 53718
608-838-0444

PROJECT INFORMATION

HILLDALE SHOPPING CENTER

HILLDALE

702 N Midvale Blvd
Madison, WI 53705

ISSUANCE AND REVISIONS

#	DATE	DESCRIPTION
	3/13/2023	CITY SUBMITTAL

KEY PLAN

SHEET INFORMATION

PROJECT MANAGER SJA
PROJECT NUMBER 120.0311.30

GRADING PLAN

C 300

© Eppstein Uhen Architects, Inc.

V:\Projects\2020\120.0311.30\CAD\120.0311.30 PSD0.dwg ALEXANDER KEEFE, OVERALL GRADING PLAN, 2023/03/10, 4:15 PM, ARCH FULL BLEED E1 (30.00 X 42.00 INCHES)

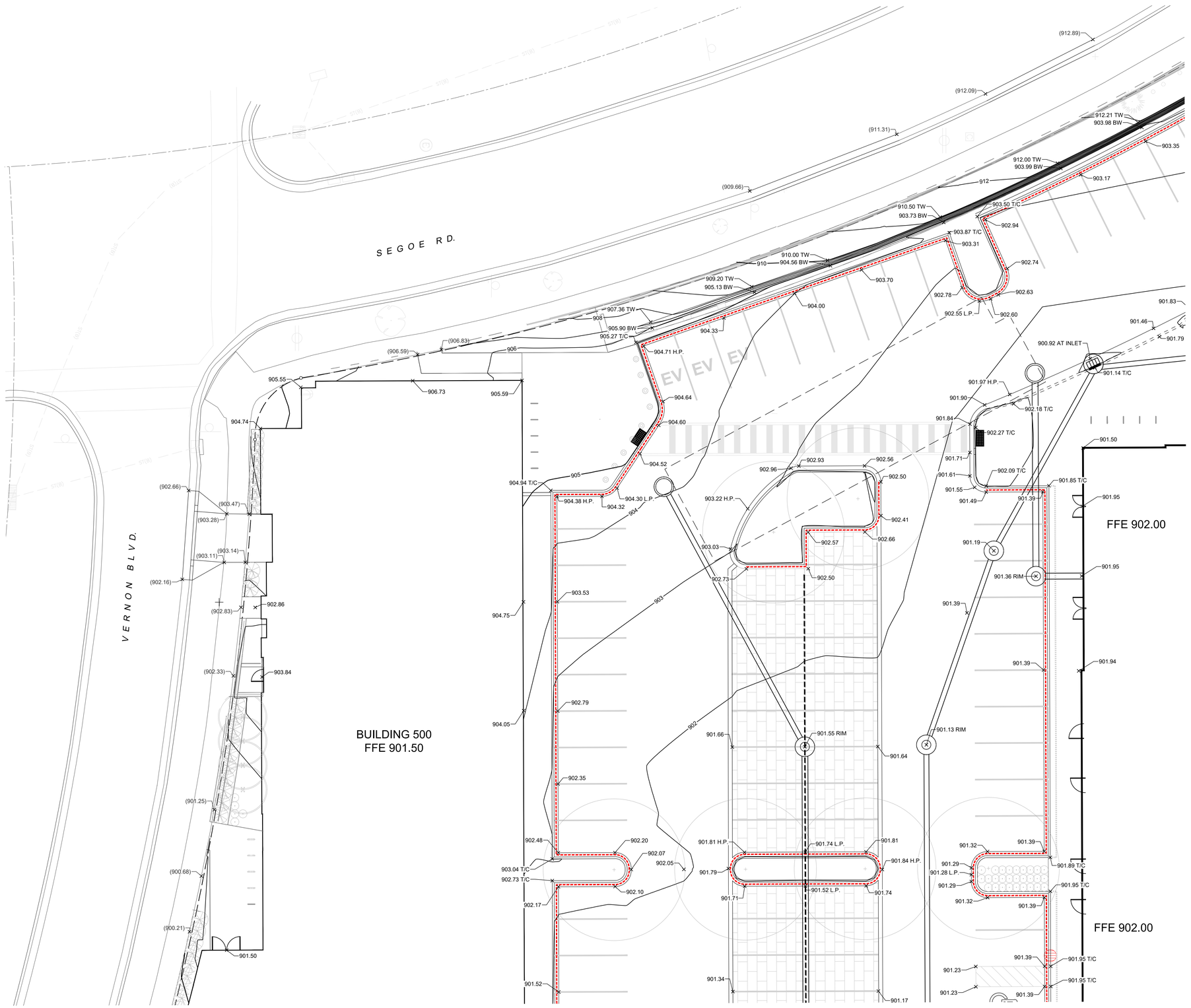

BUILDING 500
FFE 901.50

NOTES:

H.P. = HIGH POINT FOR DRAINAGE

L.P. = LOW POINT FOR DRAINAGE

T/C = TOP OF CURB

TW = TOP OF WALL

BW = BOTTOM OF WALL

BC = BACK OF CURB

(XXX.XX) = EXISTING SPOT ELEVATION

ALL SPOT ELEVATIONS ARE AT THE EDGE OF PAVEMENT (FLAG OF CURB)

HATCHED CURB AND GUTTER DEPICTS REJECT CURB LOCATIONS

ALL LANDSCAPE AND SOD AREAS SHALL HAVE POSITIVE DRAINAGE

CONTRACTOR SHALL PROVIDE CONTROL JOINTS, CONSTRUCTION JOINTS AND EXPANSION JOINTS IN SLAB ON GRADE, SIDEWALKS AND DRIVEWAYS.
CONTROL JOINT MAXIMUM DISTANCE: SIDEWALKS - 8' O.C., ALL OTHERS 10' O.C.
SAW CUT CONTROL JOINTS SHALL BE A MINIMUM OF ¼ OF THE CONCRETE THICKNESS.
EXPANSION JOINT MINIMUM DISTANCE: SIDEWALKS - 24' O.C., ALL OTHERS 40' O.C.
DOWEL ALL EXPANSION JOINTS - 24" O.C.

eppstein uhen : architects

milwaukee 333 East Chicago Street Milwaukee, Wisconsin 53202 telephone 414.271.5350

madison 309 West Johnson Street, Suite 202 Madison, Wisconsin 53703 telephone 608.442.5350

WS DEVELOPMENT
33 BOYLSTON ST, STE 3000
CHESTNUT HILL, MA 02467
P 617.232.8900

SNYDER & ASSOCIATES
5010 VOGES ROAD
MADISON, WISCONSIN 53718
608-838-0444

PROJECT INFORMATION

HILLDALE SHOPPING CENTER

HILLDALE

702 N Midvale Blvd
Madison, WI 53705

ISSUANCE AND REVISIONS

#	DATE	DESCRIPTION
	3/13/2023	CITY SUBMITTAL

KEY PLAN

SHEET INFORMATION

PROJECT MANAGER	SJA
PROJECT NUMBER	120.0311.30

0 10
FEET

TO OBTAIN LOCATION OF PARTICIPANTS' UNDERGROUND FACILITIES BEFORE YOU DIG IN WISCONSIN

CALL DIGGERS HOTLINE
1-800-242-8511
TOLL FREE

WIS. STATUTE 182.0175 (1974) REQUIRES MIN. OF 3 WORK DAYS NOTICE BEFORE YOU EXCAVATE

GRADING PLAN

C 301

© Eppstein Uhen Architects, Inc.

V:\Projects\2020\120.0311.30\CAD\20120.0311.30 P300.dwg ALEXANDER.KEEFE, GRADING PLAN, 2023/03/10, 4:18 PM, ARCH FULL BLEED E1 (30.00 X 42.00 INCHES)

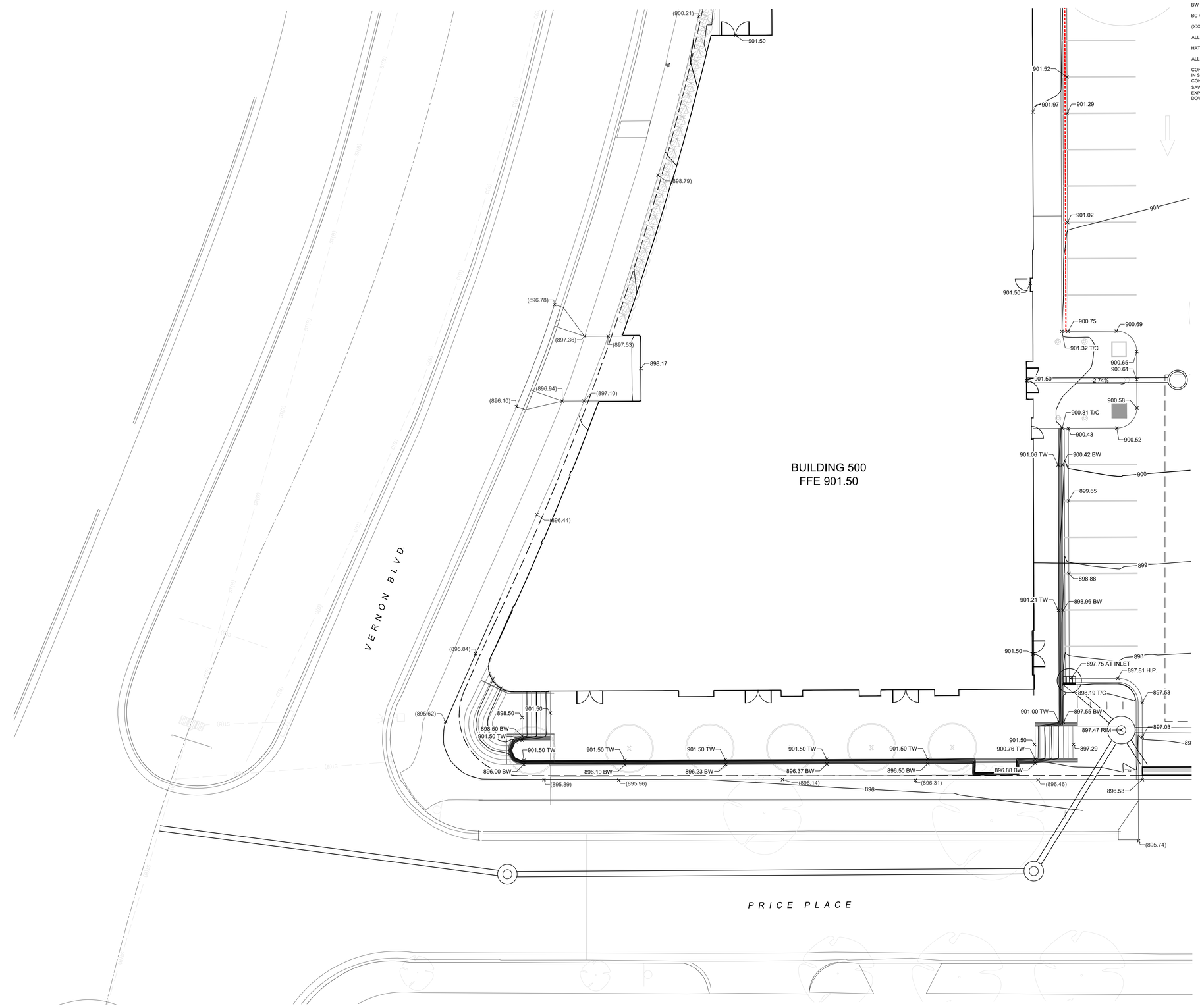

NOTES:

H.P. = HIGH POINT FOR DRAINAGE

L.P. = LOW POINT FOR DRAINAGE

T/C = TOP OF CURB

TW = TOP OF WALL

BW = BOTTOM OF WALL

BC = BACK OF CURB

(XXX.XX) = EXISTING SPOT ELEVATION

ALL SPOT ELEVATIONS ARE AT THE EDGE OF PAVEMENT (FLAG OF CURB)

HATCHED CURB AND GUTTER DEPICTS REJECT CURB LOCATIONS

ALL LANDSCAPE AND SOD AREAS SHALL HAVE POSITIVE DRAINAGE

CONTRACTOR SHALL PROVIDE CONTROL JOINTS, CONSTRUCTION JOINTS AND EXPANSION JOINTS IN SLAB ON GRADE. SIDEWALKS AND DRIVEWAYS.
CONTROL JOINT MAXIMUM DISTANCE: SIDEWALKS - 8' O.C., ALL OTHERS 10' O.C.
SAW CUT CONTROL JOINTS SHALL BE A MINIMUM OF ¼ OF THE CONCRETE THICKNESS.
EXPANSION JOINT MINIMUM DISTANCE: SIDEWALKS - 24' O.C., ALL OTHERS 40' O.C.
DOWEL ALL EXPANSION JOINTS - 24" O.C.

0 10
FEET

TO OBTAIN LOCATION OF PARTICIPANTS' UNDERGROUND FACILITIES BEFORE YOU DIG IN WISCONSIN

CALL DIGGERS HOTLINE
1-800-242-8511
TOLL FREE

WIS. STATUTE 182.0175 (1974)
REQUIRES MIN. OF 3 WORK DAYS
NOTICE BEFORE YOU EXCAVATE

eppstein uhen : architects

milwaukee 333 East Chicago Street Milwaukee, Wisconsin 53202 telephone 414.271.5350

madison 309 West Johnson Street, Suite 202 Madison, Wisconsin 53703 telephone 608.442.5350

WS DEVELOPMENT
33 BOYLSTON ST, STE 3000
CHESTNUT HILL, MA 02467
P 617.232.8900

SNYDER & ASSOCIATES
5010 VOGES ROAD
MADISON, WISCONSIN 53718
608-838-0444

PROJECT INFORMATION

HILLDALE SHOPPING CENTER

HILLDALE

702 N Midvale Blvd
Madison, WI 53705

ISSUANCE AND REVISIONS

#	DATE	DESCRIPTION
	3/13/2023	CITY SUBMITTAL

KEY PLAN

SHEET INFORMATION

PROJECT MANAGER	SJA
PROJECT NUMBER	120.0311.30

GRADING PLAN

C 302

© Eppstein Uhen Architects, Inc.

V:\Projects\2020\120.0311.30\CAD\120.0311.30 P300.dwg ALEXANDER KEEFE, GRADING PLAN, 2023/03/10, 4:20 PM, ARCH FULL BLEED E1 (30.00 X 42.00 INCHES)

NOTES:

H.P. = HIGH POINT FOR DRAINAGE

L.P. = LOW POINT FOR DRAINAGE

T/C = TOP OF CURB

TW = TOP OF WALL

BW = BOTTOM OF WALL

BC = BACK OF CURB

(XXX.XX) = EXISTING SPOT ELEVATION

ALL SPOT ELEVATIONS ARE AT THE EDGE OF PAVEMENT (FLAG OF CURB)

HATCHED CURB AND GUTTER DEPICTS REJECT CURB LOCATIONS

ALL LANDSCAPE AND SOD AREAS SHALL HAVE POSITIVE DRAINAGE

CONTRACTOR SHALL PROVIDE CONTROL JOINTS, CONSTRUCTION JOINTS AND EXPANSION JOINTS IN SLAB ON GRADE, SIDEWALKS AND DRIVEWAYS.
CONTROL JOINT MAXIMUM DISTANCE: SIDEWALKS - 8' O.C., ALL OTHERS 10' O.C.
SAW CUT CONTROL JOINTS SHALL BE A MINIMUM OF ¼ OF THE CONCRETE THICKNESS.
EXPANSION JOINT MINIMUM DISTANCE: SIDEWALKS - 24' O.C., ALL OTHERS 40' O.C.
DOWEL ALL EXPANSION JOINTS - 24" O.C.

BUILDING
400
FFE 902.00

BUILDING
300
FFE 901.00

BUILDING
300
FFE 899.00

P R I C E P L A C E

PUBLIC ROW

PRIVATE ROW

0 10
FEET

TO OBTAIN LOCATION OF PARTICIPANTS' UNDERGROUND FACILITIES BEFORE YOU DIG IN WISCONSIN

CALL DIGGERS HOTLINE
1-800-242-8511
TOLL FREE

WIS. STATUTE 182.0175 (1974) REQUIRES MIN. OF 3 WORK DAYS NOTICE BEFORE YOU EXCAVATE

eppstein uhen : architects

milwaukee 333 East Chicago Street Milwaukee, Wisconsin 53202 telephone 414 . 271 . 5350

madison 309 West Johnson Street, Suite 202 Madison, Wisconsin 53703 telephone 608 . 442 . 5350

WS DEVELOPMENT
33 BOYLSTON ST, STE 3000
CHESTNUT HILL, MA 02467
P 617.232.8900

SNYDER & ASSOCIATES
5010 VOGES ROAD
MADISON, WISCONSIN 53718
608-838-0444

PROJECT INFORMATION

HILLDALE SHOPPING CENTER

HILLDALE

702 N Midvale Blvd
Madison, WI 53705

ISSUANCE AND REVISIONS

#	DATE	DESCRIPTION
	3/13/2023	CITY SUBMITTAL

KEY PLAN

SHEET INFORMATION

PROJECT MANAGER	SJA
PROJECT NUMBER	120.0311.30

GRADING PLAN

C 303

© Eppstein Uhen Architects, Inc.

V:\Projects\2020\120.0311.30\CADD\120.0311.30 P300.dwg ALEXANDER KEEFE, GRADING PLAN, 2023/03/10, 4:23 PM, ARCH FULL BLEED E1 (30.00 X 42.00 INCHES)

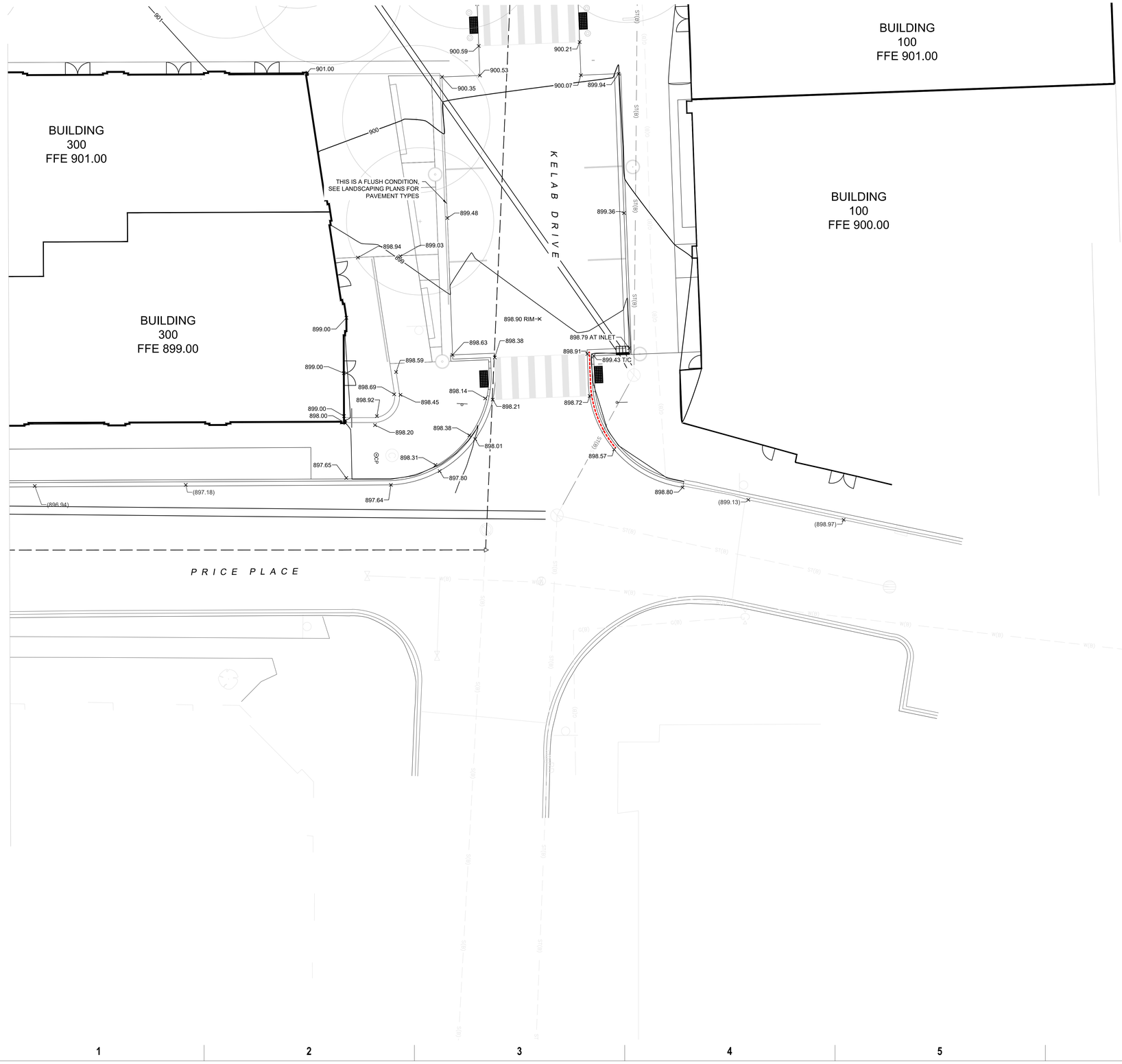

NOTES:

H.P. = HIGH POINT FOR DRAINAGE

L.P. = LOW POINT FOR DRAINAGE

T/C = TOP OF CURB

TW = TOP OF WALL

BW = BOTTOM OF WALL

BC = BACK OF CURB

(XXX.XX) = EXISTING SPOT ELEVATION

ALL SPOT ELEVATIONS ARE AT THE EDGE OF PAVEMENT (FLAG OF CURB)

HATCHED CURB AND GUTTER DEPICTS REJECT CURB LOCATIONS

ALL LANDSCAPE AND SOD AREAS SHALL HAVE POSITIVE DRAINAGE

CONTRACTOR SHALL PROVIDE CONTROL JOINTS, CONSTRUCTION JOINTS AND EXPANSION JOINTS IN SLAB ON GRADE. SIDEWALKS AND DRIVEWAYS.
CONTROL JOINT MAXIMUM DISTANCE: SIDEWALKS - 8' O.C., ALL OTHERS 10' O.C.
SAW CUT CONTROL JOINTS SHALL BE A MINIMUM OF ¼ OF THE CONCRETE THICKNESS.
EXPANSION JOINT MINIMUM DISTANCE: SIDEWALKS - 24' O.C., ALL OTHERS 40' O.C.
DOWEL ALL EXPANSION JOINTS - 24" O.C.

0 10
FEET

TO OBTAIN LOCATION OF PARTICIPANTS' UNDERGROUND FACILITIES BEFORE YOU DIG IN WISCONSIN

CALL DIGGERS HOTLINE
1-800-242-8511
TOLL FREE

WIS. STATUTE 182.0175 (1974) REQUIRES MIN. OF 3 WORK DAYS NOTICE BEFORE YOU EXCAVATE

eppstein uhen : architects

milwaukee 333 East Chicago Street Milwaukee, Wisconsin 53202 telephone 414.271.5350

madison 309 West Johnson Street, Suite 202 Madison, Wisconsin 53703 telephone 608.442.5350

WS DEVELOPMENT
33 BOYLSTON ST, STE 3000
CHESTNUT HILL, MA 02467
P 617.232.8900

SNYDER & ASSOCIATES
5010 VOGES ROAD
MADISON, WISCONSIN 53718
608-838-0444

PROJECT INFORMATION

HILLDALE SHOPPING CENTER

HILLDALE

702 N Midvale Blvd
Madison, WI 53705

ISSUANCE AND REVISIONS

#	DATE	DESCRIPTION
	3/13/2023	CITY SUBMITTAL

KEY PLAN

SHEET INFORMATION

PROJECT MANAGER SJA

PROJECT NUMBER 120.0311.30

GRADING PLAN

C 304

© Eppstein Uhen Architects, Inc.

V:\Projects\2020\120.0311.30\CAD\120.0311.30 P300.dwg ALEXANDER KEEFE, GRADING PLAN, 2023/03/10, 4:25 PM, ARCH FULL BLEED E1 (30.00 X 42.00 INCHES)

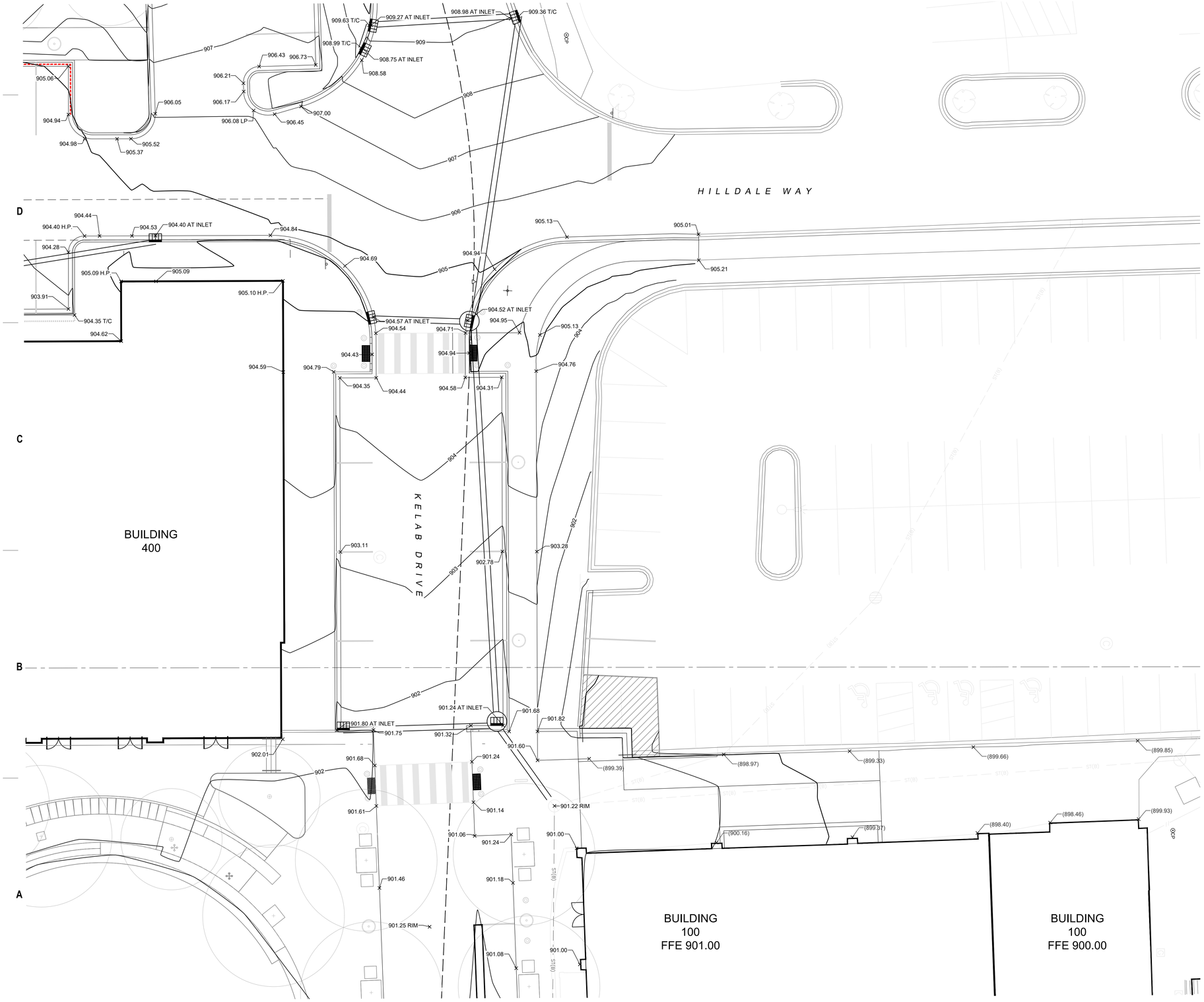

NOTES:

H.P. = HIGH POINT FOR DRAINAGE

L.P. = LOW POINT FOR DRAINAGE

T/C = TOP OF CURB

TW = TOP OF WALL

BW = BOTTOM OF WALL

BC = BACK OF CURB

(XXX.XX) = EXISTING SPOT ELEVATION

ALL SPOT ELEVATIONS ARE AT THE EDGE OF PAVEMENT (FLAG OF CURB)

HATCHED CURB AND GUTTER DEPICTS REJECT CURB LOCATIONS

ALL LANDSCAPE AND SOD AREAS SHALL HAVE POSITIVE DRAINAGE

CONTRACTOR SHALL PROVIDE CONTROL JOINTS, CONSTRUCTION JOINTS AND EXPANSION JOINTS IN SLAB ON GRADE, SIDEWALKS AND DRIVEWAYS.
CONTROL JOINT MAXIMUM DISTANCE: SIDEWALKS - 8' O.C., ALL OTHERS 10' O.C.
SAW CUT CONTROL JOINTS SHALL BE A MINIMUM OF ¼ OF THE CONCRETE THICKNESS.
EXPANSION JOINT MINIMUM DISTANCE: SIDEWALKS - 24' O.C., ALL OTHERS 40' O.C.
DOWEL ALL EXPANSION JOINTS - 24" O.C.

eppstein uhen : architects

milwaukee 333 East Chicago Street Milwaukee, Wisconsin 53202 telephone 414.271.5350

madison 309 West Johnson Street, Suite 202 Madison, Wisconsin 53703 telephone 608.442.5350

WS DEVELOPMENT
33 BOYLSTON ST, STE 3000
CHESTNUT HILL, MA 02467
P 617.232.8900

SNYDER & ASSOCIATES
5010 VOGES ROAD
MADISON, WISCONSIN 53718
608-838-0444

PROJECT INFORMATION

HILLDALE SHOPPING CENTER

HILLDALE

702 N Midvale Blvd
Madison, WI 53705

ISSUANCE AND REVISIONS

#	DATE	DESCRIPTION
	3/13/2023	CITY SUBMITTAL

KEY PLAN

SHEET INFORMATION

0 10 FEET

PROJECT MANAGER	SJA
PROJECT NUMBER	120.0311.30

TO OBTAIN LOCATION OF PARTICIPANTS' UNDERGROUND FACILITIES BEFORE YOU DIG IN WISCONSIN

CALL DIGGERS HOTLINE
1-800-242-8511
TOLL FREE

WIS. STATUTE 182.0175 (1974) REQUIRES MIN. OF 3 WORK DAYS NOTICE BEFORE YOU EXCAVATE

GRADING PLAN

C 305

© Eppstein Uhen Architects, Inc.

V:\Projects\2020\120.0311.30\CAD\20120.0311.30 P300.dwg ALEXANDER.KEEFE, GRADING PLAN, 2023/03/10, 4:27 PM, ARCH FULL BLEED E1 (30.00 X 42.00 INCHES)

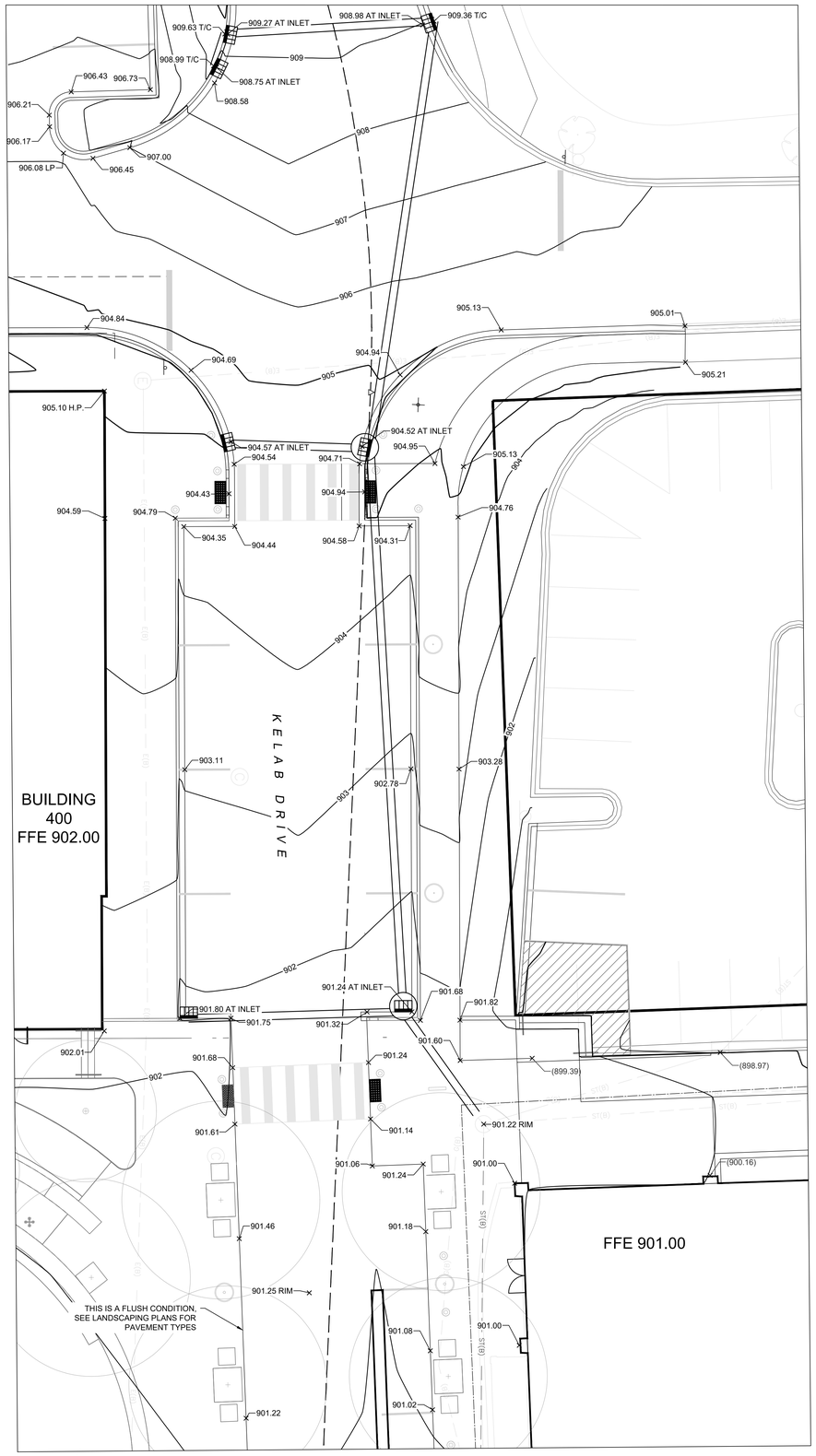

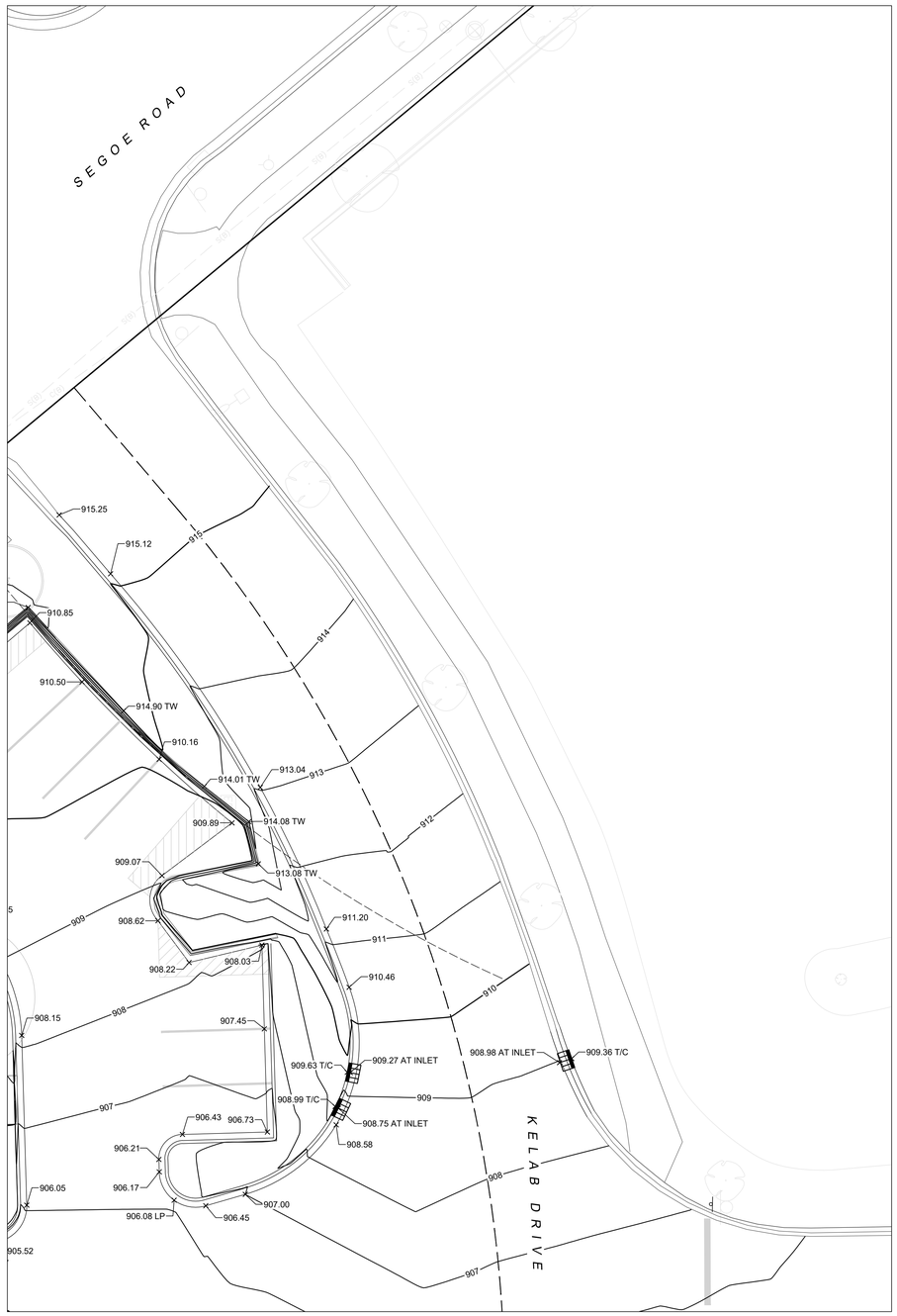

NOTES:

H.P. = HIGH POINT FOR DRAINAGE

L.P. = LOW POINT FOR DRAINAGE

T/C = TOP OF CURB

TW = TOP OF WALL

BW = BOTTOM OF WALL

BC = BACK OF CURB

(XXX.XX) = EXISTING SPOT ELEVATION

ALL SPOT ELEVATIONS ARE AT THE EDGE OF PAVEMENT (FLAG OF CURB)

HATCHED CURB AND GUTTER DEPICTS REJECT CURB LOCATIONS

ALL LANDSCAPE AND SOD AREAS SHALL HAVE POSITIVE DRAINAGE

CONTRACTOR SHALL PROVIDE CONTROL JOINTS, CONSTRUCTION JOINTS AND EXPANSION JOINTS IN SLAB ON GRADE. SIDEWALKS AND DRIVEWAYS.
CONTROL JOINT MAXIMUM DISTANCE: SIDEWALKS - 8' O.C., ALL OTHERS 10' O.C.
SAW CUT CONTROL JOINTS SHALL BE A MINIMUM OF ¼ OF THE CONCRETE THICKNESS.
EXPANSION JOINT MINIMUM DISTANCE: SIDEWALKS - 24' O.C., ALL OTHERS 40' O.C.
DOWEL ALL EXPANSION JOINTS - 24" O.C.

eppstein uhen : architects

milwaukee 333 East Chicago Street
Milwaukee, Wisconsin 53202
telephone 414.271.5350

madison 309 West Johnson Street, Suite 202
Madison, Wisconsin 53703
telephone 608.442.5350

WS DEVELOPMENT
33 BOYLSTON ST, STE 3000
CHESTNUT HILL, MA 02467
P 617.232.8900

SNYDER & ASSOCIATES
5010 VOGES ROAD
MADISON, WISCONSIN 53718
608-838-0444

PROJECT INFORMATION

HILLDALE SHOPPING CENTER

HILLDALE

702 N Midvale Blvd
Madison, WI 53705

ISSUANCE AND REVISIONS

#	DATE	DESCRIPTION
	3/13/2023	CITY SUBMITTAL

KEY PLAN

SHEET INFORMATION

0 10
FEET

PROJECT MANAGER	SJA
PROJECT NUMBER	120.0311.30

TO OBTAIN LOCATION OF PARTICIPANTS' UNDERGROUND FACILITIES BEFORE YOU DIG IN WISCONSIN

CALL DIGGERS HOTLINE
1-800-242-8511
TOLL FREE

WIS. STATUTE 182.0175 (1974)
REQUIRES MIN. OF 3 WORK DAYS
NOTICE BEFORE YOU EXCAVATE

GRADING PLAN

C 306

© Eppstein Uhen Architects, Inc.

V:\Projects\2020\120.0311.30\CAD\0.120.0311.30 P300.dwg ALEXANDER KEEFE, GRADING PLAN, 2023/03/10, 4:34 PM, ARCH FULL BLEED E1 (30.00 X 42.00 INCHES)

NOTES:

H.P. = HIGH POINT FOR DRAINAGE

L.P. = LOW POINT FOR DRAINAGE

T/C = TOP OF CURB

TW = TOP OF WALL

BW = BOTTOM OF WALL

BC = BACK OF CURB

(XXX.XX) = EXISTING SPOT ELEVATION

ALL SPOT ELEVATIONS ARE AT THE EDGE OF PAVEMENT (FLAG OF CURB)

HATCHED CURB AND GUTTER DEPICTS REJECT CURB LOCATIONS

ALL LANDSCAPE AND SOD AREAS SHALL HAVE POSITIVE DRAINAGE

CONTRACTOR SHALL PROVIDE CONTROL JOINTS, CONSTRUCTION JOINTS AND EXPANSION JOINTS IN SLAB ON GRADE, SIDEWALKS AND DRIVEWAYS.
CONTROL JOINT MAXIMUM DISTANCE: SIDEWALKS - 8' O.C., ALL OTHERS 10' O.C.
SAW CUT CONTROL JOINTS SHALL BE A MINIMUM OF ¼ OF THE CONCRETE THICKNESS.
EXPANSION JOINT MINIMUM DISTANCE: SIDEWALKS - 24' O.C., ALL OTHERS 40' O.C.
DOWEL ALL EXPANSION JOINTS - 24" O.C.

SEGOE ROAD

KELAB DRIVE

BUILDING
400
FFE 902.00

0 10
FEET

TO OBTAIN LOCATION OF PARTICIPANTS' UNDERGROUND FACILITIES BEFORE YOU DIG IN WISCONSIN

CALL DIGGERS HOTLINE
1-800-242-8511
TOLL FREE

WIS. STATUTE 182.0175 (1974) REQUIRES MIN. OF 3 WORK DAYS NOTICE BEFORE YOU EXCAVATE

eppstein uhen : architects

milwaukee 333 East Chicago Street Milwaukee, Wisconsin 53202 telephone 414.271.5350

madison 309 West Johnson Street, Suite 202 Madison, Wisconsin 53703 telephone 608.442.5350

WS DEVELOPMENT
33 BOYLSTON ST, STE 3000
CHESTNUT HILL, MA 02467
P 617.232.8900

SNYDER & ASSOCIATES
5010 VOGES ROAD
MADISON, WISCONSIN 53718
608-838-0444

PROJECT INFORMATION

HILLDALE SHOPPING CENTER

HILLDALE

702 N Midvale Blvd
Madison, WI 53705

ISSUANCE AND REVISIONS

#	DATE	DESCRIPTION
	3/13/2023	CITY SUBMITTAL

KEY PLAN

SHEET INFORMATION

PROJECT MANAGER SJA

PROJECT NUMBER 120.0311.30

GRADING PLAN

C 307

© Eppstein Uhen Architects, Inc.

V:\Projects\2020\120.0311.30\CAD\120.0311.30-P300.dwg ALEXANDER KEEFE, GRADING PLAN, 2023/03/10, 4:37 PM, ARCH FULL BLEED E1 (30.00 X 42.00 INCHES)

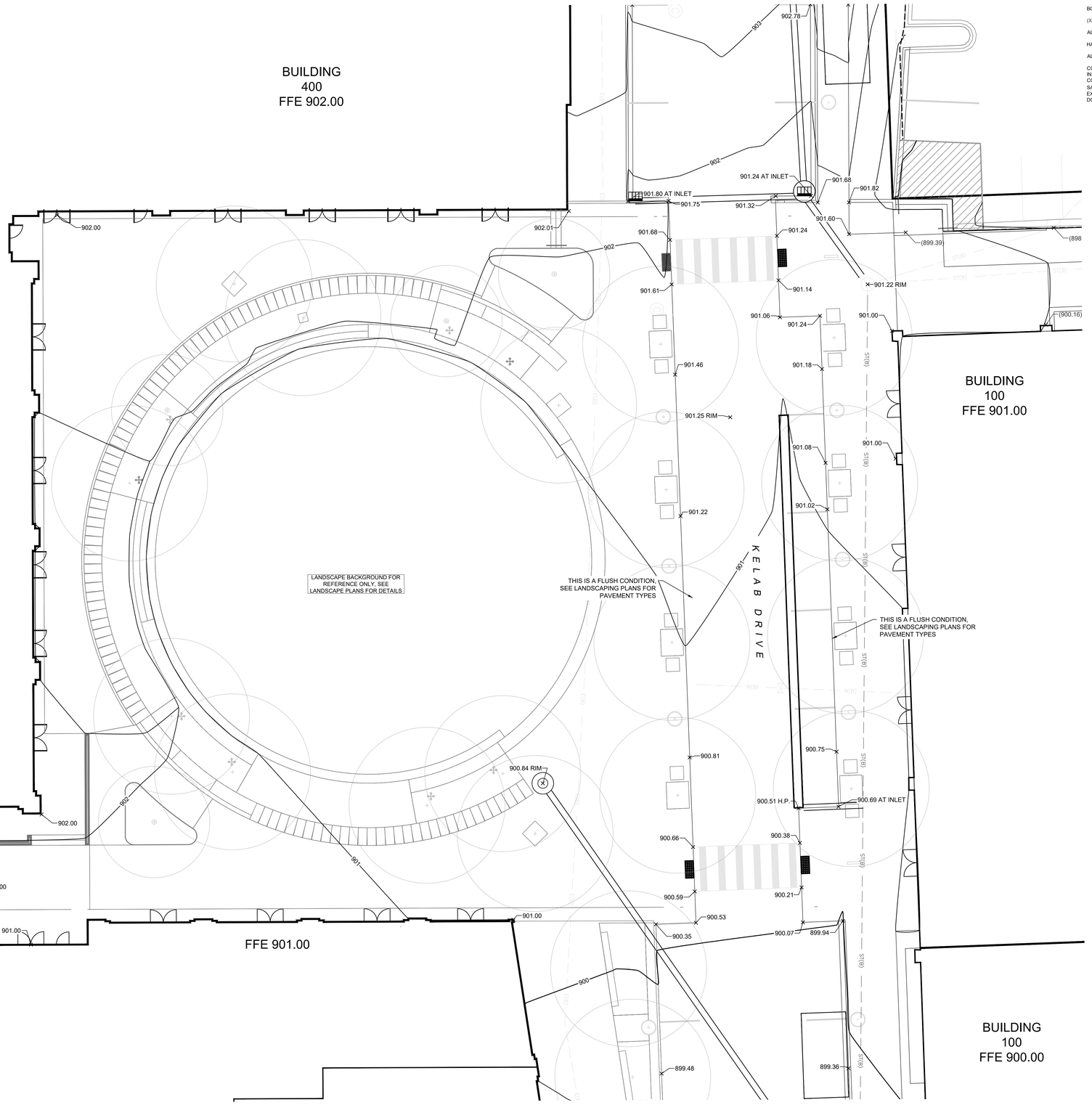

NOTES:

H.P. = HIGH POINT FOR DRAINAGE

L.P. = LOW POINT FOR DRAINAGE

T/C = TOP OF CURB

TW = TOP OF WALL

BW = BOTTOM OF WALL

BC = BACK OF CURB

(XXX.XX) = EXISTING SPOT ELEVATION

ALL SPOT ELEVATIONS ARE AT THE EDGE OF PAVEMENT (FLAG OF CURB)

HATCHED CURB AND GUTTER DEPICTS REJECT CURB LOCATIONS

ALL LANDSCAPE AND SOD AREAS SHALL HAVE POSITIVE DRAINAGE

CONTRACTOR SHALL PROVIDE CONTROL JOINTS, CONSTRUCTION JOINTS AND EXPANSION JOINTS IN SLAB ON GRADE, SIDEWALKS AND DRIVEWAYS.
CONTROL JOINT MAXIMUM DISTANCE: SIDEWALKS - 8' O.C., ALL OTHERS 10' O.C.
SAW CUT CONTROL JOINTS SHALL BE A MINIMUM OF ¼ OF THE CONCRETE THICKNESS.
EXPANSION JOINT MINIMUM DISTANCE: SIDEWALKS - 24' O.C., ALL OTHERS 40' O.C.
DOWEL ALL EXPANSION JOINTS - 24" O.C.

0 10
FEET

TO OBTAIN LOCATION OF PARTICIPANTS' UNDERGROUND FACILITIES BEFORE YOU DIG IN WISCONSIN

CALL DIGGERS HOTLINE
1-800-242-8511
TOLL FREE

WIS. STATUTE 182.0175 (1974) REQUIRES MIN. OF 3 WORK DAYS NOTICE BEFORE YOU EXCAVATE

eppstein uhen : architects

milwaukee 333 East Chicago Street Milwaukee, Wisconsin 53202 telephone 414.271.5350

madison 309 West Johnson Street, Suite 202 Madison, Wisconsin 53703 telephone 608.442.5350

WS DEVELOPMENT
33 BOYLSTON ST, STE 3000
CHESTNUT HILL, MA 02467
P 617.232.8900

SNYDER & ASSOCIATES
5010 VOGES ROAD
MADISON, WISCONSIN 53718
608-838-0444

PROJECT INFORMATION

HILLDALE SHOPPING CENTER

HILLDALE

702 N Midvale Blvd
Madison, WI 53705

ISSUANCE AND REVISIONS

#	DATE	DESCRIPTION
	3/13/2023	CITY SUBMITTAL

KEY PLAN

SHEET INFORMATION

PROJECT MANAGER SJA

PROJECT NUMBER 120.0311.30

GRADING PLAN

C 308

© Eppstein Uhen Architects, Inc.

V:\Projects\2020\120.0311.30\CAD\01\20.0311.30 P300.dwg ALEXANDER KEEFE, GRADING PLAN, 2023/03/10, 4:39 PM, ARCH FULL BLEED E1 (36.00 X 42.00 INCHES)

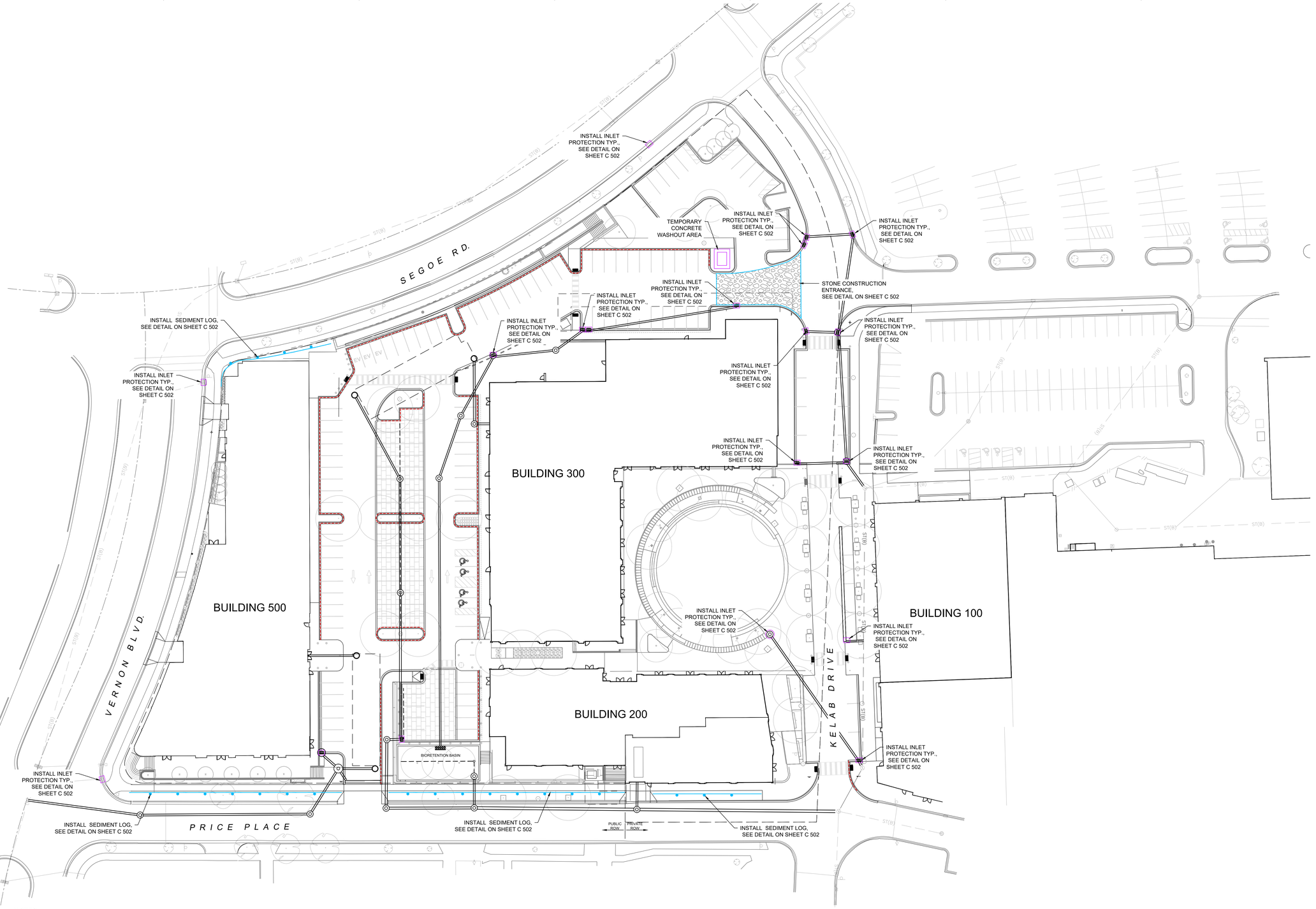

NOTES:

-ALL SILT FENCE MUST BE INSTALLED BY THE CONTRACTOR AND INSPECTED BY THE CITY PRIOR TO ANY SITE WORK.

-SITE EROSION CONTROL MEASURES MUST BE IN PLACE AT ALL TIMES. SHOULD DEVICES BE REMOVED FOR WORK ACCESS, THEY SHALL BE REINSTALLED AT THE END OF EACH WORK DAY UNTIL PAVEMENTS HAVE BEEN INSTALLED AND ALL LANDSCAPE AREAS HAVE BEEN MULCHED AND SODDED. SEEDED AREAS MUST EXHIBIT MINIMUM OF 70% SOIL COVERAGE.

-REFER TO THE EROSION CONTROL PLAN NOTES AND DETAIL SHEETS FOR MORE INFORMATION.

CONSTRUCTION SEQUENCE

*INSTALL EROSION/SEDIMENT CONTROL MEASURES

*INSTALL STORMWATER MANAGEMENT SEDIMENT BASINS

*INSTALL STORM SEWER

*INSTALL STRUCTURES

*INSTALL PAVEMENTS

*INSTALL LAWN/ LANDSCAPE

*FLUSH STORM SEWER

*REMOVE EROSION CONTROL MEASURES ONLY AFTER ALL PAVEMENTS HAVE BEEN INSTALLED AND ALL SOILS HAVE BEEN STABILIZED

NOTE FOR GRADING CONTRACTOR:

ANY PROPERTY IRONS THAT ARE DISTURBED IN THE GRADING PROCESS SHALL BE RESET BY A LICENSED LAND SURVEYOR AT NO ADDITIONAL COST TO THE OWNER.

NOTES:

ENGINEER TO OBTAIN RIGHT-OF-WAY EXCAVATION PERMIT PRIOR TO BEGINNING SITE WORK.

CONSTRUCTION FENCING TO BE INSTALLED AROUND ENTIRE CONSTRUCTION SITE. COORDINATE WITH OWNER FOR FENCING AND GATE LOCATION AND APPROPRIATE SIGNAGE LOCATION.

PLAN PREPARED FROM TOPOGRAPHIC SURVEY BY:

SNYDER & ASSOCIATES
5010 VOGES ROAD
MADISON, WI 53718
608-838-0444 EXT. 234

CONTRACTOR SHALL LOCATE ALL UTILITIES WHICH MAY AFFECT THIS WORK NOTIFY THE OWNER OF ANY POTENTIAL CONFLICTS.

CONTRACTOR SHALL VERIFY ALL EXISTING AND PROPOSED ELEVATIONS PRIOR TO START OF CONSTRUCTION. VERIFY CRITICAL ELEVATIONS TO ENSURE CONFORMANCE WITH GRADING PLAN, PARTICULARLY WITH WALK, AND/OR PAVEMENTS TO REMAIN. MEET EXISTING GRADES ALONG STREETS, PROPERTY LINES, AND DRIVEWAY ENTRANCES. RESTORE ALL EXISTING PAVEMENTS THAT REMAIN TO THEIR ORIGINAL, IF NOT BETTER CONDITION. NOTIFY OWNER OF ANY CONFLICTS.

AREAS NOT PAVED AND TO BE LANDSCAPED SHALL RECEIVE MINIMUM OF 4" DEPTH COMPACTED TOPSOIL.

CONTRACTOR SHALL COORDINATE GRADING AND INSTALLATION OF DRIVES IN R.O.W. WITH APPROPRIATE GOVERNMENT AGENCIES. OBTAIN APPROPRIATE PERMITS FOR GRADING AND DRAINAGE IN ALL R.O.W.

REFER TO OWNERS SPECIFICATIONS FOR CURB, APPROACH, AND CONCRETE PROFILES AS WELL AS ADDITIONAL SITE STANDARDS RELATED TO THIS PROJECT.

EXCAVATOR IS RESPONSIBLE FOR ALL EROSION CONTROL INSPECTIONS

0 30
FEET

TO OBTAIN LOCATION OF PARTICIPANTS' UNDERGROUND FACILITIES BEFORE YOU DIG IN WISCONSIN

CALL DIGGERS HOTLINE
1-800-242-8511
TOLL FREE

WIS. STATUTE 182.0175 (1974) REQUIRES MIN. OF 3 WORK DAYS NOTICE BEFORE YOU EXCAVATE

eppstein uhen : architects
milwaukee 333 East Chicago Street Milwaukee, Wisconsin 53202 telephone 414.271.5350
madison 309 West Johnson Street, Suite 202 Madison, Wisconsin 53703 telephone 608.442.5350

WS DEVELOPMENT
33 BOYLSTON ST., STE 3000
CHESTNUT HILL, MA 02467
P 617.232.8900

SNYDER & ASSOCIATES
5010 VOGES ROAD
MADISON, WISCONSIN 53718
608-838-0444

PROJECT INFORMATION

HILLDALE SHOPPING CENTER

HILLDALE

702 N Midvale Blvd
Madison, WI 53705

ISSUANCE AND REVISIONS

#	DATE	DESCRIPTION
	3/13/2023	CITY SUBMITTAL

KEY PLAN

SHEET INFORMATION

PROJECT MANAGER	SJA
PROJECT NUMBER	120.0311.30

EROSION CONTROL PLAN

C 309

© Eppstein Uhen Architects, Inc.

V:\Projects\2020\120.0311.30\CAD\120.031.30 P300.dwg ALEXANDER KEEFE, EROSION CONTROL PLAN, 2023/03/10, 4:42 PM, ARCH FULL BLEED E1 (30.00 X 42.00 INCHES)

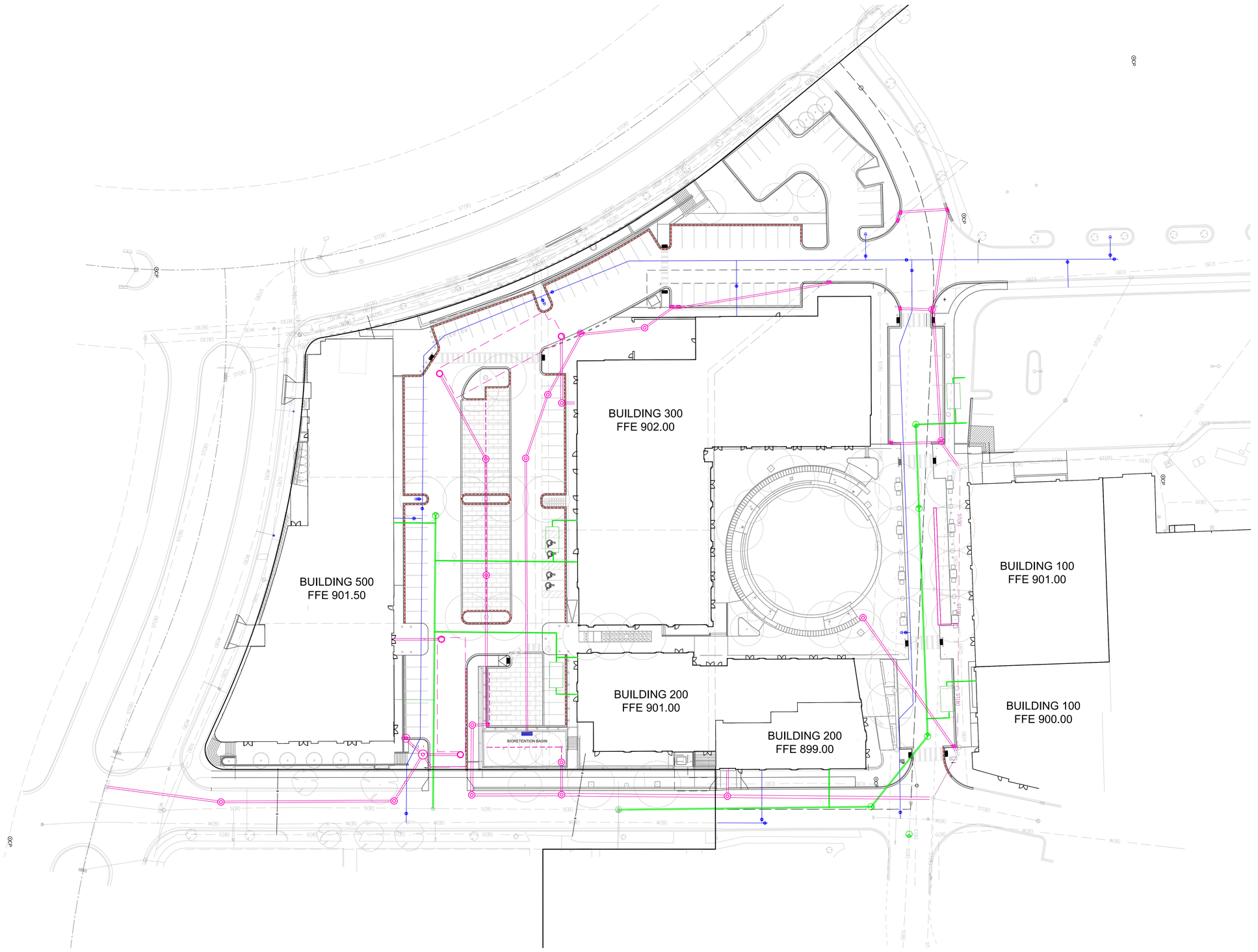

LEGEND

- SANITARY SEWER PIPES & STRUCTURES
- STORM SEWER PIPES & STRUCTURES
- WATER PIPES & STRUCTURES

TO OBTAIN LOCATION OF PARTICIPANTS' UNDERGROUND FACILITIES BEFORE YOU DIG IN WISCONSIN

CALL DIGGERS HOTLINE
1-800-242-8511
TOLL FREE

WIS. STATUTE 182.0175 (1974) REQUIRES MIN. OF 3 WORK DAYS NOTICE BEFORE YOU EXCAVATE

0 30
FEET

eppstein uhen : architects

milwaukee 333 East Chicago Street
Milwaukee, Wisconsin 53202
telephone 414.271.5350

madison 309 West Johnson Street, Suite 202
Madison, Wisconsin 53703
telephone 608.442.5350

WS DEVELOPMENT
33 BOYLSTON ST., STE 3000
CHESTNUT HILL, MA 02467
P 617.232.8900

SNYDER & ASSOCIATES
5010 VOGES ROAD
MADISON, WISCONSIN 53718
608-838-0444

PROJECT INFORMATION

HILLDALE SHOPPING CENTER

HILLDALE

702 N Midvale Blvd
Madison, WI 53705

ISSUANCE AND REVISIONS

#	DATE	DESCRIPTION
	3/13/2023	CITY SUBMITTAL

KEY PLAN

SHEET INFORMATION

PROJECT MANAGER	SJA
PROJECT NUMBER	120.0311.30

OVERALL UTILITY PLAN

C 400

© Eppstein Uhen Architects, Inc.

V:\Projects\2020\120.0311.30\CAD\120.0311.30 P400.dwg ALEXANDER KEEFE, OVERALL UTILITY PLAN, 2023/03/10, 4:50 PM, ARCH FULL BLEED E1 (30.00 X 42.00 INCHES)

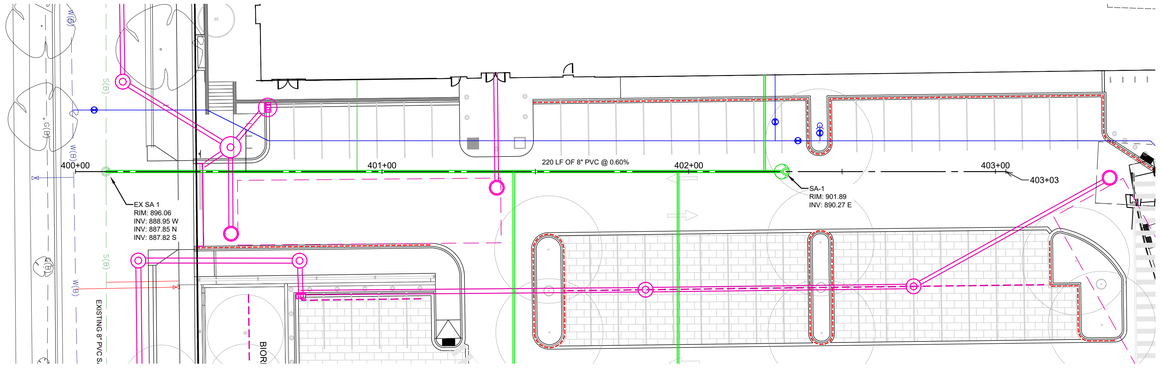

SANITARY SEWER PLAN VIEW

SCALE : 1" = 20'

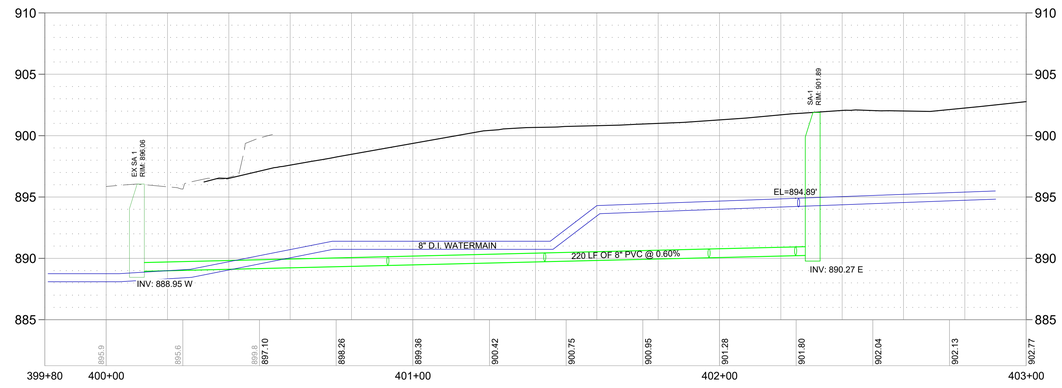

SANITARY SEWER PROFILE VIEW

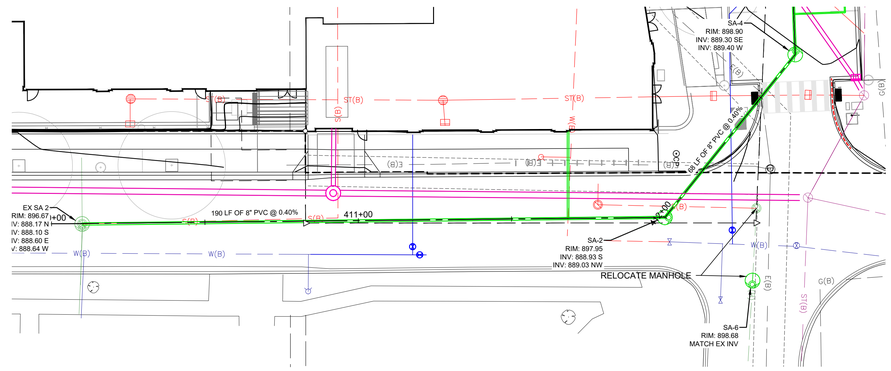

SANITARY SEWER PLAN VIEW

SCALE : 1" = 20'

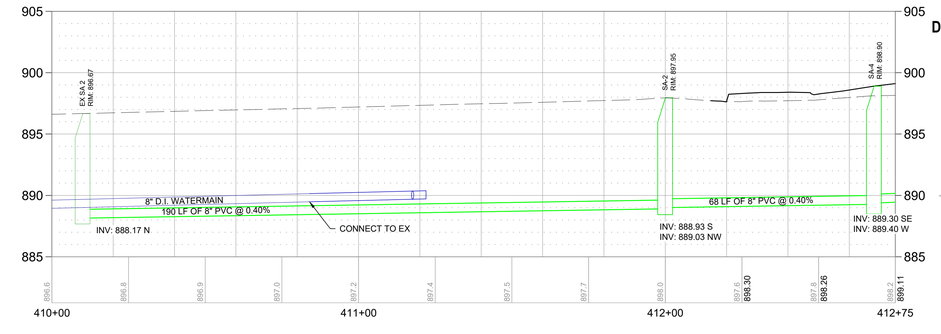

SANITARY SEWER PROFILE VIEW

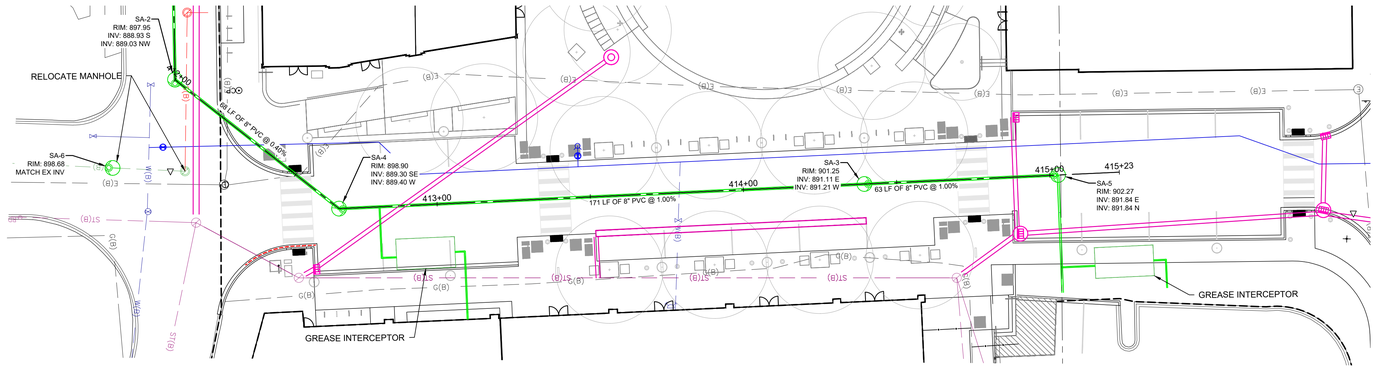

SANITARY SEWER PLAN VIEW

SCALE : 1" = 20'

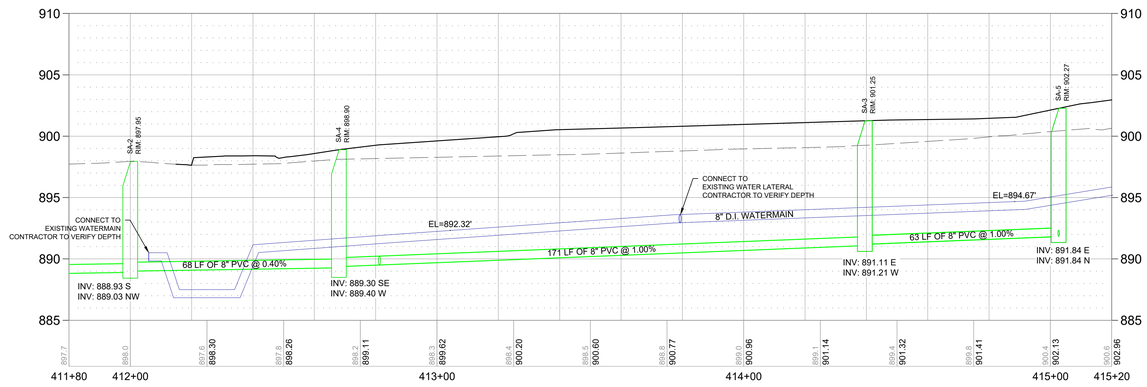

SANITARY SEWER PROFILE VIEW

eppstein uhen : architects
milwaukee 333 East Chicago Street
Milwaukee, Wisconsin 53202
telephone 414.271.5350
madison 309 West Johnson Street, Suite 202
Madison, Wisconsin 53703
telephone 608.442.5350

WS DEVELOPMENT
33 BOYLSTON ST, STE 3000
CHESTNUT HILL, MA 02467
P 617.232.8900

SNYDER & ASSOCIATES
5010 VOGES ROAD
MADISON, WISCONSIN 53718
608-838-0444

PROJECT INFORMATION

HILLDALE SHOPPING CENTER

HILLDALE

702 N Midvale Blvd
Madison, WI 53705

ISSUANCE AND REVISIONS

#	DATE	DESCRIPTION
	3/13/2023	CITY SUBMITTAL

KEY PLAN

SHEET INFORMATION

PROJECT MANAGER	SJA
PROJECT NUMBER	120.0311.30

TO OBTAIN LOCATION OF PARTICIPANTS' UNDERGROUND FACILITIES BEFORE YOU DIG IN WISCONSIN

CALL DIGGERS HOTLINE
1-800-242-8511
TOLL FREE

WIS. STATUTE 182.0175 (1974) REQUIRES MIN. OF 3 WORK DAYS NOTICE BEFORE YOU EXCAVATE

SANITARY SEWER PLAN & PROFILE

C 401

© Eppstein Uhen Architects, Inc.

V:\Projects\2020\120.0311.30\CAD\0120.0311.30 PA00.dwg ANDREW BERGMANN, SANITARY SEWER PLAN & PROFILE, 2023/03/10, 4:14 PM, ARCH FULL BLEED E1 (30.00 X 42.00 INCHES)

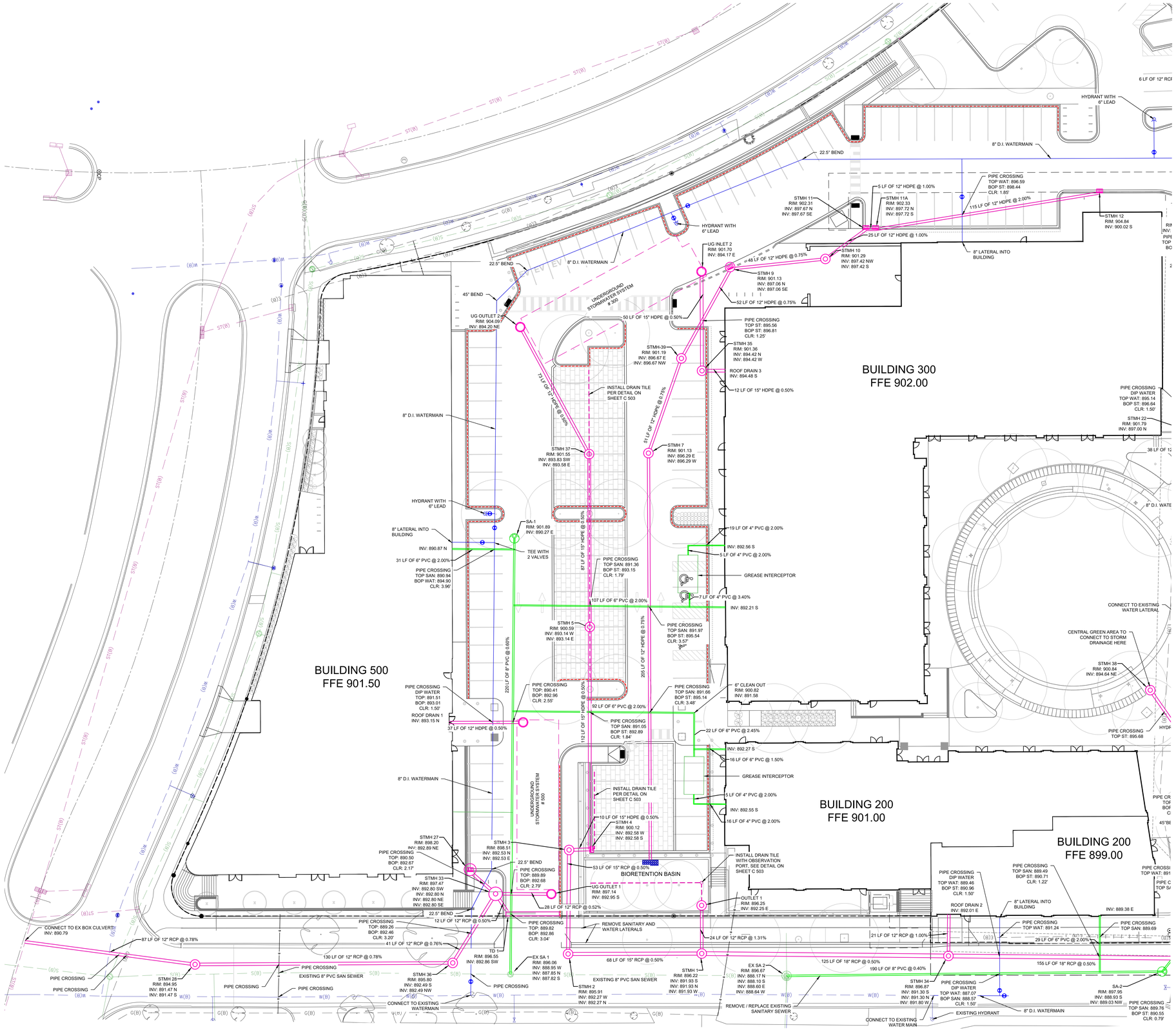
BUILDING 300
FFE 902.00
BUILDING 500
FFE 901.50
BUILDING 200
FFE 901.00
BUILDING 200
FFE 899.00
BIORETENTION BASIN
UNDERGROUND STORMWATER SYSTEM # 500
UNDERGROUND STORMWATER SYSTEM
HYDRANT WITH 6" LEAD
8" D.I. WATERMAIN
22.5° BEND
45° BEND
8" LATERAL INTO BUILDING
UG INLET 2
RIM: 901.70
INV: 894.17 E
UG OUTLET 2
RIM: 904.09
INV: 894.20 NE
STMH 11
RIM: 902.31
INV: 897.67 N
INV: 897.67 SE
STMH 11A
RIM: 902.33
INV: 897.72 N
INV: 897.72 S
STMH 12
RIM: 904.84
INV: 900.02 S
STMH 10
RIM: 901.29
INV: 897.42 NW
INV: 897.42 S
STMH 9
RIM: 901.13
INV: 897.06 N
INV: 897.06 SE
STMH 35
RIM: 901.36
INV: 894.42 N
INV: 894.42 W
STMH-39
RIM: 901.19
INV: 896.67 E
INV: 896.67 NW
STMH 37
RIM: 901.55
INV: 893.83 SW
INV: 893.58 E
STMH 7
RIM: 901.13
INV: 896.29 E
INV: 896.29 W
STMH 5
RIM: 900.59
INV: 893.14 W
INV: 893.14 E
SA-1
RIM: 901.89
INV: 890.27 E
INV: 890.87 N
TEE WITH 2 VALVES
STMH 27
RIM: 898.20
INV: 892.89 NE
STMH 33
RIM: 897.47
INV: 892.80 SW
INV: 892.80 N
INV: 892.80 NE
INV: 892.80 SE
STMH 3
RIM: 898.51
INV: 892.53 N
INV: 892.53 E
STMH 4
RIM: 900.12
INV: 892.58 W
INV: 892.58 S
STMH 28
RIM: 894.95
INV: 891.47 N
INV: 891.47 S
STMH 36
RIM: 895.80
INV: 892.49 S
INV: 892.49 NW
STMH 2
RIM: 895.91
INV: 892.27 W
INV: 892.27 N
STMH 1
RIM: 896.22
INV: 891.93 S
INV: 891.93 N
INV: 891.93 W
EX SA 1
RIM: 896.06
INV: 888.95 W
INV: 887.85 N
INV: 887.82 S
EX SA 2
RIM: 896.67
INV: 888.17 N
INV: 888.10 S
INV: 888.60 E
INV: 888.64 W
STMH 34
RIM: 896.87
INV: 891.30 S
INV: 891.30 N
INV: 891.80 W
SA-2
RIM: 897.95
INV: 888.93 S
INV: 889.03 NW
TD 1
RIM: 896.55
INV: 892.86 SW
ROOF DRAIN 1
INV: 893.15 N
ROOF DRAIN 2
INV: 892.01 E
ROOF DRAIN 3
INV: 894.48 S
STMH 22
RIM: 901.79
INV: 897.00 N
STMH 38
RIM: 900.84
INV: 894.64 NE
6" CLEAN OUT
RIM: 900.82
INV: 891.58
GREASE INTERCEPTOR
INSTALL DRAIN TILE PER DETAIL ON SHEET C 503
INSTALL DRAIN TILE WITH OBSERVATION PORT, SEE DETAIL ON SHEET C 503
REMOVE SANITARY AND WATER LATERALS
REMOVE / REPLACE EXISTING SANITARY SEWER
EXISTING 8" PVC SAN SEWER
EXISTING HYDRANT
CONNECT TO EX BOX CULVERT
CONNECT TO EXISTING WATERMAIN
CONNECT TO EXISTING WATER MAIN
CONNECT TO EXISTING WATER LATERAL
CENTRAL GREEN AREA TO CONNECT TO STORM DRAINAGE HERE
PIPE CROSSING
PIPE CROSSING TOP WAT: 896.59 BOP ST: 898.44 CLR: 1.85'
PIPE CROSSING TOP SAN: 889.49 BOP ST: 890.71 CLR: 1.22'
PIPE CROSSING DIP WATER TOP WAT: 889.46 BOP ST: 890.96 CLR: 1.50'
PIPE CROSSING DIP WATER TOP WAT: 887.07 BOP SAN: 888.57 CLR: 1.50'
PIPE CROSSING DIP WATER TOP WAT: 895.14 BOP ST: 896.64 CLR: 1.50'
PIPE CROSSING TOP SAN: 889.36 BOP ST: 893.15 CLR: 1.79'
PIPE CROSSING TOP SAN: 891.97 BOP ST: 895.54 CLR: 3.57'
PIPE CROSSING TOP SAN: 890.94 BOP WAT: 894.90 CLR: 3.96'
PIPE CROSSING TOP SAN: 891.66 BOP ST: 895.14 CLR: 3.48'
PIPE CROSSING TOP SAN: 891.05 BOP ST: 892.89 CLR: 1.84'
PIPE CROSSING TOP: 890.41 BOP: 892.96 CLR: 2.55'
PIPE CROSSING TOP: 890.50 BOP: 892.67 CLR: 2.17'
PIPE CROSSING TOP: 889.89 BOP: 892.68 CLR: 2.79'
PIPE CROSSING TOP: 889.26 BOP: 892.46 CLR: 3.20'
PIPE CROSSING TOP ST: 895.56 BOP ST: 896.81 CLR: 1.25'
PIPE CROSSING TOP ST: 895.68
PIPE CROSSING TOP SAN: 889.69
PIPE CROSSING TOP SAN: 889.76 BOP ST: 890.55 CLR: 0.79'
PIPE CROSSING TOP WAT: 891.24
PIPE CROSSING TOP WAT: 895.14 BOP ST: 896.64 CLR: 1.50'
5 LF OF 12" HDPE @ 1.00%
25 LF OF 12" HDPE @ 1.00%
1.15 LF OF 12" HDPE @ 2.00%
48 LF OF 12" HDPE @ 0.75%
52 LF OF 12" HDPE @ 0.75%
50 LF OF 15" HDPE @ 0.50%
12 LF OF 15" HDPE @ 0.50%
53 LF OF 15" RCP @ 0.50%
28 LF OF 12" RCP @ 0.52%
12 LF OF 12" RCP @ 0.50%
87 LF OF 12" RCP @ 0.78%
130 LF OF 12" RCP @ 0.78%
41 LF OF 12" RCP @ 0.76%
68 LF OF 15" RCP @ 0.50%
24 LF OF 12" RCP @ 1.31%
21 LF OF 12" RCP @ 1.00%
125 LF OF 18" RCP @ 0.50%
155 LF OF 18" RCP @ 0.50%
190 LF OF 8" PVC @ 0.40%
29 LF OF 6" PVC @ 2.00%
31 LF OF 6" PVC @ 2.00%
107 LF OF 6" PVC @ 2.00%
92 LF OF 6" PVC @ 2.00%
37 LF OF 12" HDPE @ 0.50%
220 LF OF 8" PVC @ 0.60%
87 LF OF 15" HDPE @ 0.50%
112 LF OF 15" HDPE @ 0.50%
205 LF OF 12" HDPE @ 0.75%
71 LF OF 12" HDPE @ 0.70%
19 LF OF 4" PVC @ 2.00%
5 LF OF 4" PVC @ 2.00%
7 LF OF 4" PVC @ 3.40%
22 LF OF 6" PVC @ 2.45%
16 LF OF 6" PVC @ 1.50%
5 LF OF 4" PVC @ 2.00%
16 LF OF 4" PVC @ 2.00%
10 LF OF 15" HDPE @ 0.50%
INV: 892.56 S
INV: 892.21 S
INV: 892.27 S
INV: 892.55 S
INV: 889.38 E
INV: 890.79
INV: 890.87 N
INV: 892.86 SW
INV: 892.86 NE
INV: 892.80 NW
INV: 892.49 S
INV: 892.49 NW
INV: 892.95 S
INV: 892.25 E
INV: 892.27 W
INV: 892.27 N
INV: 891.93 S
INV: 891.93 N
INV: 891.93 W
INV: 888.64 W
INV: 889.03 NW
INV: 890.55
INV: 894.90
INV: 894.95
INV: 891.47 N
INV: 891.47 S
INV: 892.89 NE
INV: 892.80 N
INV: 892.80 NE
INV: 892.80 SE
INV: 892.49 S
INV: 892.49 NW
INV: 892.27 W
INV: 892.27 N
INV: 888.64 W
INV: 888.60 E
INV: 888.10 S
INV: 888.17 N
INV: 891.30 S
INV: 891.30 N
INV: 891.80 W
INV: 889.03 NW
INV: 888.93 S
INV: 897.95
INV: 896.67
INV: 896.64
INV: 894.64 NE
INV: 894.42 W
INV: 894.42 N
INV: 896.67 E
INV: 896.67 NW
INV: 897.14
INV: 896.25
INV: 896.29 W
INV: 896.29 E
INV: 893.83 SW
INV: 893.58 E
INV: 893.53 E
INV: 892.58 S
INV: 892.58 W
INV: 892.89 NE
INV: 892.95 S
INV: 892.86 SE
INV: 892.86 SW
INV: 892.80 N
INV: 892.80 NE
INV: 892.80 SW
INV: 894.42 W
INV: 894.42 N
INV: 894.48 S
INV: 894.20 NE
INV: 897.67 N
INV: 897.67 SE
INV: 897.72 N
INV: 897.72 S
INV: 897.42 NW
INV: 897.42 S
INV: 897.06 N
INV: 897.06 SE
INV: 901.89
INV: 890.27 E
INV: 888.95 W
INV: 887.85 N
INV: 887.82 S
INV: 901.55
INV: 893.83 SW
INV: 893.58 E
INV: 901.13
INV: 896.29 E
INV: 896.29 W
INV: 901.19
INV: 896.67 E
INV: 896.67 NW
INV: 901.36
INV: 894.42 N
INV: 894.42 W
INV: 895.56
INV: 896.81
INV: 901.13
INV: 897.06 N
INV: 897.06 SE
INV: 901.29
INV: 897.42 NW
INV: 897.42 S
INV: 902.33
INV: 897.72 N
INV: 897.72 S
INV: 904.84
INV: 900.02 S
INV: 901.31
INV: 897.67 N
INV: 897.67 SE
INV: 904.09
INV: 894.20 NE
INV: 901.70
INV: 894.17 E
INV: 898.20
INV: 892.89 NE
INV: 898.51
INV: 892.53 N
INV: 892.53 E
INV: 900.12
INV: 892.58 W
INV: 892.58 S
INV: 897.47
INV: 892.80 SW
INV: 892.80 N
INV: 892.80 NE
INV: 892.80 SE
INV: 896.55
INV: 892.86 SW
INV: 896.06
INV: 888.95 W
INV: 887.85 N
INV: 887.82 S
INV: 895.80
INV: 892.49 S
INV: 892.49 NW
INV: 895.91
INV: 892.27 W
INV: 892.27 N
INV: 896.22
INV: 891.93 S
INV: 891.93 N
INV: 891.93 W
INV: 896.67
INV: 888.17 N
INV: 888.10 S
INV: 888.60 E
INV: 888.64 W
INV: 896.87
INV: 891.30 S
INV: 891.30 N
INV: 891.80 W
INV: 897.95
INV: 888.93 S
INV: 889.03 NW
INV: 894.95
INV: 891.47 N
INV: 891.47 S
INV: 890.87 N
INV: 890.94
INV: 894.90
INV: 890.55
INV: 889.76
INV: 889.69
INV: 895.68
INV: 901.79
INV: 897.00 N
INV: 900.84
INV: 894.64 NE
INV: 900.59
INV: 893.14 W
INV: 893.14 E
INV: 901.41
INV: 892.96
INV: 901.66
INV: 895.14
INV: 901.05
INV: 892.89
INV: 901.56
INV: 901.50
INV: 892.67
INV: 890.50
INV: 892.67
INV: 889.89
INV: 892.68
INV: 889.26
INV: 892.46
INV: 895.56
INV: 896.81
INV: 889.49
INV: 890.71
INV: 889.46
INV: 890.96
INV: 887.07
INV: 888.57
INV: 895.14
INV: 896.64
INV: 891.24
INV: 889.69
INV: 889.76
INV: 890.55
INV: 891.51
INV: 893.01
INV: 890.41
INV: 892.96
INV: 891.05
INV: 892.89
INV: 891.66
INV: 895.14
INV: 891.97
INV: 895.54
INV: 890.94
INV: 894.90
INV: 889.36
INV: 893.15
INV: 889.26
INV: 892.46
INV: 889.89
INV: 892.68
INV: 890.50
INV: 892.67
INV: 892.53 N
INV: 892.53 E
INV: 898.51
INV: 892.20 NE
INV: 904.09
INV: 894.17 E
INV: 901.70
INV: 897.67 N
INV: 897.67 SE
INV: 902.31
INV: 897.72 N
INV: 897.72 S
INV: 904.84
INV: 900.02 S
INV: 901.29
INV: 897.42 NW
INV: 897.42 S
INV: 901.13
INV: 897.06 N
INV: 897.06 SE
INV: 901.36
INV: 894.42 N
INV: 894.42 W
INV: 894.48 S
INV: 901.79
INV: 897.00 N
INV: 900.84
INV: 894.64 NE
INV: 900.82
INV: 891.58

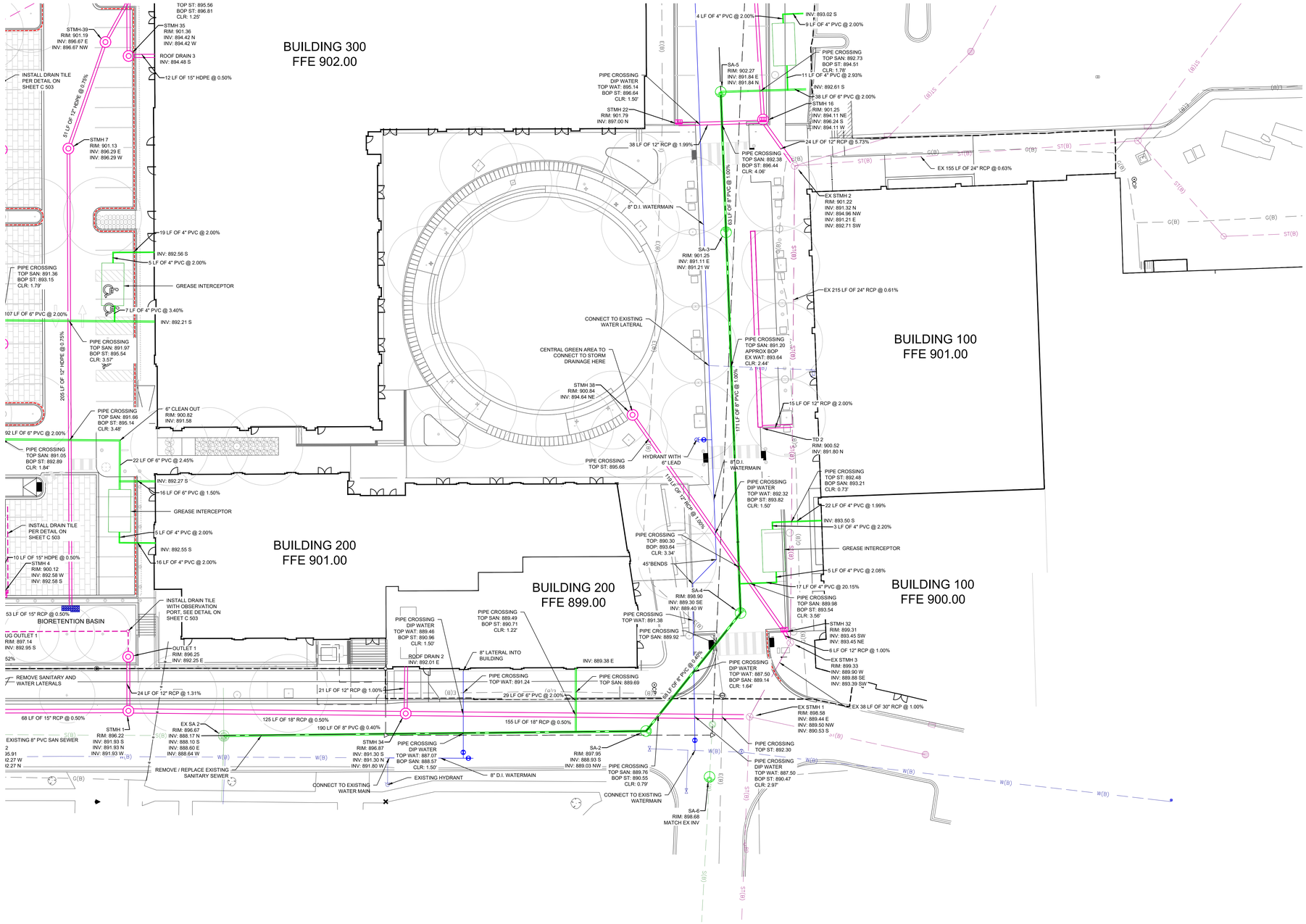

eppstein uhen : architects

milwaukee 333 East Chicago Street
Milwaukee, Wisconsin 53202
telephone 414.271.5350

madison 309 West Johnson Street, Suite 202
Madison, Wisconsin 53703
telephone 608.442.5350

WS DEVELOPMENT
33 BOYLSTON ST, STE 3000
CHESTNUT HILL, MA 02467
P 617.232.8900

SNYDER & ASSOCIATES
5010 VOGES ROAD
MADISON, WISCONSIN 53718
608-838-0444

PROJECT INFORMATION

HILLDALE SHOPPING CENTER

HILLDALE

702 N Midvale Blvd
Madison, WI 53705

ISSUANCE AND REVISIONS

#	DATE	DESCRIPTION
	3/13/2023	CITY SUBMITTAL

KEY PLAN

SHEET INFORMATION

PROJECT MANAGER	SJA
PROJECT NUMBER	120.0311.30

UTILITY PLAN

C 403

TO OBTAIN LOCATION OF PARTICIPANTS' UNDERGROUND FACILITIES BEFORE YOU DIG IN WISCONSIN

CALL DIGGERS HOTLINE
1-800-242-8511
TOLL FREE

WIS. STATUTE 182.0175 (1974) REQUIRES MIN. OF 3 WORK DAYS NOTICE BEFORE YOU EXCAVATE

0 20
FEET

© Eppstein Uhen Architects, Inc.

V:\Projects\2020\120.0311.30\CAD\120.0311.30 P400.dwg ANDREW BERGMANN, UTILITY PLAN, 2023/03/10, 4:16 PM, ARCH FULL BLEED E1 (30.00 X 42.00 INCHES)

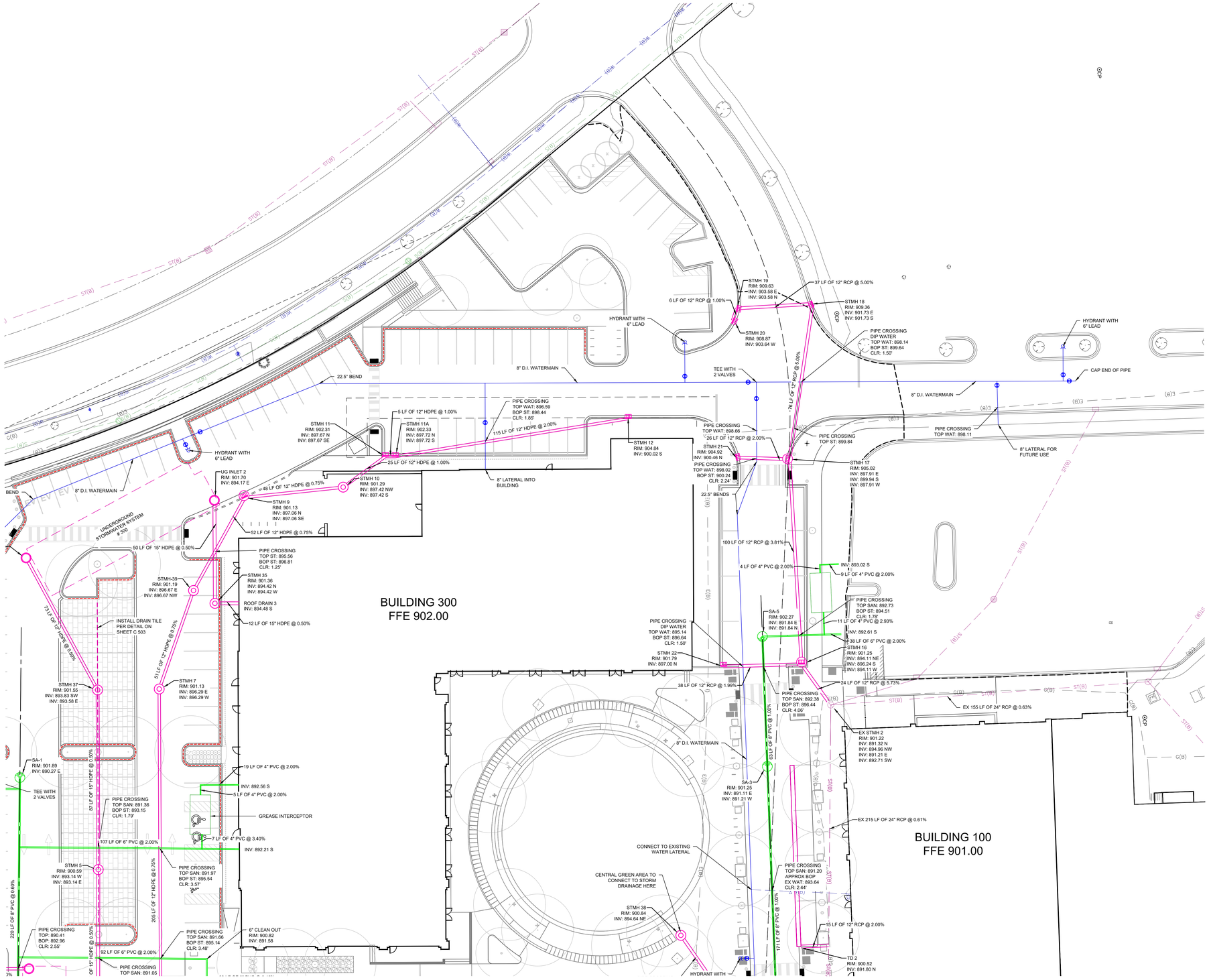

eppstein uhen : architects
milwaukee 333 East Chicago Street Milwaukee, Wisconsin 53202 telephone 414.271.5350
madison 309 West Johnson Street, Suite 202 Madison, Wisconsin 53703 telephone 608.442.5350

WS DEVELOPMENT
33 BOYLSTON ST, STE 3000
CHESTNUT HILL, MA 02467
P 617.232.8900

SNYDER & ASSOCIATES
5010 VOGES ROAD
MADISON, WISCONSIN 53718
608-838-0444

PROJECT INFORMATION

HILLDALE SHOPPING CENTER

HILLDALE

702 N Midvale Blvd
Madison, WI 53705

ISSUANCE AND REVISIONS

#	DATE	DESCRIPTION
	3/13/2023	CITY SUBMITTAL

KEY PLAN

SHEET INFORMATION

PROJECT MANAGER	SJA
PROJECT NUMBER	120.0311.30

TO OBTAIN LOCATION OF PARTICIPANTS' UNDERGROUND FACILITIES BEFORE YOU DIG IN WISCONSIN

CALL DIGGERS HOTLINE
1-800-242-8511
TOLL FREE

WIS. STATUTE 182.0175 (1974) REQUIRES MIN. OF 3 WORK DAYS NOTICE BEFORE YOU EXCAVATE

0 20
FEET

UTILITY PLAN

C 404

© Eppstein Uhen Architects, Inc.

V:\Projects\2020\120.0311.30\CAD\0120.0311.30 P400.dwg ANDREW BERGMANN, UTILITY PLAN, 2023/03/10, 4:16 PM, ARCH FULL BLEED E1 (30.00 X 42.00 INCHES)

STRUCTURE TABLE					
STRUCTURE NAME	RIM EL	STRUCTURE TYPE	INVERTS IN	INVERTS OUT	FRAME/GRATE
EX SA 1	896.06	ECCENTRIC MH	W = 888.95		R 1550-0054
EX SA 2	896.67	ECCENTRIC MH	N = 888.17		R 1550-0054
SA-1	901.89	ECCENTRIC MH		E = 890.27	R 1550-0054
SA-2	897.95	ECCENTRIC MH	NW = 889.03	S = 888.93	R 1550-0054
SA-3	901.25	ECCENTRIC MH	W = 891.21	E = 891.11	R 1550-0054
SA-4	898.90	ECCENTRIC MH	W = 889.40	SE = 889.30	R 1550-0054
SA-5	902.27	ECCENTRIC MH	N = 891.84	E = 891.84	R 1550-0054
SA-6	898.68	ECCENTRIC MH			R 1550-0054

SANITARY PIPE TABLE								
PIPE NAME	PIPE TYPE	SIZE (IN.)	FROM	TO	LENGTH (FT)	START INV	END INV	SLOPE
SAP-1	PVC	8	SA-1	EX SA 1	220	890.27	888.95	0.60%
SAP-2	PVC	8	SA-2	EX SA 2	190	888.93	888.17	0.40%
SAP-3	PVC	8	SA-3	SA-4	171	891.11	889.40	1.00%
SAP-4	PVC	8	SA-4	SA-2	68	889.30	889.03	0.40%
SAP-5	PVC	8	SA-5	SA-3	63	891.84	891.21	1.00%
SAP-6	PVC	6			31	890.87	890.24	2.00%
SAP-7	PVC	6			107	892.21	890.07	2.00%
SAP-8	PVC	4			7	892.09	891.85	3.40%
SAP-9	PVC	4			5	892.19	892.09	2.00%
SAP-10	PVC	4			19	892.56	892.19	2.00%
SAP-11	PVC	6			92	891.58	889.75	2.00%
SAP-12	PVC	6			22	892.12	891.58	2.45%
SAP-13	PVC	6			16	892.27	892.03	1.50%
SAP-14	PVC	4			5	892.22	892.12	2.00%
SAP-15	PVC	4			16	892.55	892.22	2.00%
SAP-16	PVC	6			29	889.38	888.81	2.00%
SAP-17	PVC	4			17	892.89	889.53	20.15%
SAP-18	PVC	4			5	892.99	892.89	2.08%
SAP-19	PVC	4			3	893.06	892.99	2.20%
SAP-20	PVC	4			22	893.50	893.06	1.99%
SAP-21	PVC	6			38	892.61	891.84	2.00%
SAP-22	PVC	4			11	892.76	892.44	2.93%
SAP-23	PVC	4			4	892.84	892.76	2.00%
SAP-24	PVC	4			9	893.02	892.84	2.00%

STRUCTURE TABLE					
STRUCTURE NAME	RIM EL	STRUCTURE TYPE	INVERTS IN	INVERTS OUT	FRAME/GRATE
EX STMH 1	898.58	CONC MH	NW = 889.50 S = 890.53		R 1550-0054
EX STMH 2	901.22	CONC MH	SW = 892.71	E = 891.21	R 1550-0054
EX STMH 3	899.33	CONC MH	W = 889.90 SW = 893.39	SE = 889.88	R 1550-0054
OUTLET 1	896.25	OUTLET STRUCTURE		E = 892.25	48" HAALA GRATE
ROOF DRAIN 1	894.31	ROOF DRAIN		N = 893.15	
ROOF DRAIN 2	893.24	ROOF DRAIN		E = 892.01	
ROOF DRAIN 3	895.91	ROOF DRAIN		S = 894.48	
STMH-39	901.19	CONC MH	NW = 896.67	E = 896.67	R-2040
STMH 1	896.22	CONC MH	S = 891.93 W = 891.93	N = 891.93	R 1550-0054
STMH 2	895.91	CONC MH	W = 892.27	N = 892.27	R 1550-0054
STMH 3	898.51	CONC MH	N = 892.53	E = 892.53	R 1550-0054
STMH 4	900.12	2' X 3' CI	W = 892.58	S = 892.58	R-3067 TYPE R
STMH 5	900.59	CONC MH	W = 893.14	E = 893.14	R-2040
STMH 7	901.13	CONC MH	W = 896.29	E = 896.29	R-2040
STMH 9	901.13	CONC MH W/INLET	N = 897.06	SE = 897.06	R-3067 TYPE R
STMH 10	901.29	CONC MH	NW = 897.42	S = 897.42	R-2040
STMH 11	902.31	2' X 3' CI	N = 897.67	SE = 897.67	R-3067 TYPE R
STMH 11A	902.33	2' X 3' CI	N = 897.72	S = 897.72	R-3067 TYPE R
STMH 12	904.84	2' X 3' CI		S = 900.02	R-3067 TYPE R
STMH 16	901.25	48" CONC MH W/INLET	S = 896.24 W = 894.11	NE = 894.11	R-3067 TYPE R
STMH 17	905.02	CONC MH W/INLET	S = 899.94 W = 897.91	E = 897.91	R-3067 TYPE R
STMH 18	909.36	2' X 3' CI	S = 901.73	E = 901.73	R-3067 TYPE R
STMH 19	909.63	2' X 3' CI	E = 903.58	N = 903.58	R-3067 TYPE R
STMH 20	908.87	2' X 3' CI		W = 903.64	R-3067 TYPE R
STMH 21	904.92	2' X 3' CI		N = 900.46	R-3067 TYPE R
STMH 22	901.79	2' X 3' CI		N = 897.00	R-3067 TYPE R
STMH 27	898.20	CONC MH W/INLET		NE = 892.89	R-3067 TYPE R
STMH 28	894.95	CONC MH	N = 891.47	S = 891.47	R 1550-0054
STMH 32	899.31	2' X 3' CI	SW = 893.45	NE = 893.45	R-3067 TYPE R
STMH 33	897.47	72" CONC MH	SW = 892.80 N = 892.80 NE = 892.80	SE = 892.80	R 1550-0054
STMH 34	896.87	CONC MH	S = 891.30 W = 891.80	N = 891.30	R 1550-0054
STMH 35	901.36	CONC MH	N = 894.42	W = 894.42	R 1550-0054
STMH 36	895.80	CONC MH	NW = 892.49	S = 892.49	R 1550-0054
STMH 37	901.55	CONC MH	SW = 893.83	E = 893.58	R-2040
STMH 38	900.84	CONC MH		NE = 894.64	R 1550-0054
TD 1	896.55	ACO DRAIN MINNIKLASSIK K50		SW = 892.86	GRATE A
TD 2	901.01	ACO DRAIN MINNIKLASSIK K50		N = 891.80	GRATE A
UG INLET 1	900.63	CONC MH	S = 892.96		R-2040
UG INLET 2	901.70	CONC MH	E = 894.17		R-2040
UG OUTLET 1	897.14	CONC MH		S = 892.95	R-2040
UG OUTLET 2	904.09	CONC MH		NE = 894.20	R-2040

STORM PIPE TABLE								
PIPE NAME	PIPE TYPE	SIZE (IN.)	FROM	TO	LENGTH (FT)	START INV	END INV	SLOPE
STP-1	HDPE	12	STMH 7		205	896.29	894.75	0.75%
STP-2	HDPE	12	STMH-39	STMH 7	51	896.67	896.29	0.75%
STP-2A	HDPE	12	STMH 9	STMH-39	52	897.06	896.67	0.75%
STP-3	HDPE	12	STMH 10	STMH 9	48	897.42	897.06	0.75%
STP-4	HDPE	12	STMH 11	STMH 10	25	897.67	897.42	1.00%
STP-4A	HDPE	12	STMH 11A	STMH 11	5	897.72	897.67	1.00%
STP-5	HDPE	12	STMH 12	STMH 11A	115	900.02	897.72	2.00%
STP-7	RCP	18	STMH 34	EX STMH 1	155	891.30	890.53	0.50%
STP-8	RCP	12	ROOF DRAIN 2	STMH 34	21	892.01	891.80	1.00%
STP-9	RCP	18	STMH 1	STMH 34	125	891.93	891.30	0.50%
STP-10	RCP	12	OUTLET 1	STMH 1	24	892.25	891.93	1.31%
STP-11	RCP	15	STMH 2	STMH 1	68	892.27	891.93	0.50%
STP-12	RCP	15	STMH 3	STMH 2	53	892.53	892.27	0.50%
STP-13	HDPE	15	STMH 4	STMH 3	10	892.58	892.53	0.50%
STP-14	HDPE	15	STMH 5	STMH 4	112	893.14	892.58	0.50%
STP-15	HDPE	15	STMH 37	STMH 5	87	893.58	893.14	0.50%
STP-16	HDPE	12	UG OUTLET 2	STMH 37	73	894.20	893.83	0.50%
STP-17	RCP	30	EX STMH 3	EX STMH 1	38	889.88	889.50	1.00%
STP-20	RCP	12	TD 2		15	891.80	891.49	2.00%
STP-21	RCP	24	EX STMH 2	EX STMH 3	215	891.21	889.90	0.61%
STP-22	RCP	12	STMH 22	STMH 16	38	897.00	896.24	1.99%
STP-24	RCP	12	STMH 16	EX STMH 2	24	894.11	892.71	5.73%
STP-26	RCP	12	STMH 17	STMH 16	100	897.91	894.11	3.81%
STP-27	RCP	12	STMH 21	STMH 17	26	900.46	899.94	2.00%
STP-28	RCP	12	STMH 18	STMH 17	76	901.73	897.91	5.00%
STP-29	RCP	12	STMH 19	STMH 18	37	903.58	901.73	5.00%
STP-30	RCP	12	STMH 20	STMH 19	6	903.64	903.58	1.00%
STP-37	RCP	12	STMH 28		87	891.47	890.79	0.78%
STP-38	RCP	12	STMH 36	STMH 28	130	892.49	891.47	0.78%
STP-39	RCP	12	STMH 33	STMH 36	41	892.80	892.49	0.76%
STP-40	RCP	12	TD 1	STMH 33	12	892.86	892.80	0.50%
STP-41	RCP	12	STMH 27	STMH 33	17	892.89	892.80	0.50%
STP-42	RCP	12	UG OUTLET 1	STMH 33	28	892.95	892.80	0.52%
STP-43	HDPE	15	STMH 35	UG INLET 2	50	894.42	894.17	0.50%
STP-44	HDPE	15	ROOF DRAIN 3	STMH 35	12	894.48	894.42	0.50%
STP-45	HDPE	12	ROOF DRAIN 1	UG INLET 1	37	893.15	892.96	0.50%
STP-46	RCP	12	STMH 38	STMH 32	119	894.64	893.45	1.00%
STP-47	RCP	12	STMH 32	EX STMH 3	6	893.45	893.39	1.00%

TO OBTAIN LOCATION OF PARTICIPANTS' UNDERGROUND FACILITIES BEFORE YOU DIG IN WISCONSIN

CALL DIGGERS HOTLINE
1-800-242-8511
TOLL FREE

WIS. STATUTE 182.0175 (1974) REQUIRES MIN. OF 3 WORK DAYS NOTICE BEFORE YOU EXCAVATE

eppstein uhen : architects

milwaukee 333 East Chicago Street Milwaukee, Wisconsin 53202 telephone 414.271.5350

madison 309 West Johnson Street, Suite 202 Madison, Wisconsin 53703 telephone 608.442.5350

WS DEVELOPMENT
33 BOYLSTON ST., STE 3000
CHESTNUT HILL, MA 02467
P 617.232.8900

SNYDER & ASSOCIATES
5010 VOGES ROAD
MADISON, WISCONSIN 53718
608-838-0444

PROJECT INFORMATION

HILLDALE SHOPPING CENTER

HILLDALE

702 N Midvale Blvd
Madison, WI 53705

ISSUANCE AND REVISIONS

#	DATE	DESCRIPTION
	3/13/2023	CITY SUBMITTAL

KEY PLAN

SHEET INFORMATION

PROJECT MANAGER SJA

PROJECT NUMBER 120.0311.30

UTILITY PLAN

C 405

© Eppstein Uhen Architects, Inc.

V:\Projects\2020\120.0311.30\CADD\120.0311.30 P400.dwg ANDREW BERGMANN, UTILITY TABLES, 2023/03/10, 4:17 PM, ARCH FULL BLEED E1 (30.00 X 42.00 INCHES)

SANITARY SEWER NOTES

1. THE CONTRACTOR SHALL VERIFY THE LOCATION OF ALL EXISTING UTILITIES PRIOR TO THE START OF CONSTRUCTION.
2. THE PROPOSED IMPROVEMENTS SHALL BE CONSTRUCTED ACCORDING TO WISCONSIN ADMINISTRATIVE CODE. SECTION SPS 382-384, LATEST EDITION, THE STANDARD SPECIFICATIONS FOR SEWER CONSTRUCTION IN WISCONSIN, LATEST EDITION, AND THE LOCAL ORDINANCES AND SPECIFICATIONS.
3. BEFORE PROCEEDING WITH ANY UTILITY CONSTRUCTION, THE CONTRACTOR SHALL EXCAVATE EACH EXISTING LATERAL OR POINT OF CONNECTION AND VERIFY THE LOCATION AND ELEVATION OF ALL UTILITIES. IF ANY EXISTING UTILITIES ARE NOT AS SHOWN ON THE DRAWINGS, THE CONTRACTOR SHALL NOTIFY THE ENGINEER IMMEDIATELY FOR POSSIBLE REDESIGN.
4. ALL CONNECTIONS TO EXISTING PIPES AND MANHOLES SHALL BE CORED CONNECTIONS.
5. PROPOSED SANITARY SEWER, WATER MAIN, AND INTERNALLY CONNECTED STORM SEWER SHOWN ON THIS PLAN SHALL TERMINATE AT POINT FIVE (5) FEET FROM THE EXTERIOR BUILDING WALL. STORM SEWER CONNECTING TO EXTERIOR DOWN SPOUTS SHALL BE PER DETAILS ON THE ARCHITECTURAL PLANS. THE EXACT LOCATION OF ALL DOWN SPOUTS SHALL BE PER THE ARCHITECTURAL PLANS.
6. MATERIALS FOR SANITARY SEWER SHALL BE AS FOLLOWS:
   SANITARY SEWER SHALL BE PVC IN ACCORDANCE WITH ASTM 3034, SDR-35 AND BEDDED WITH CLASS C BEDDING.
   BEDDING: ⅜" TO 1 ½" CLEAR STONE
   COVER: ⅜" TO 1 ½" CLEAR STONE

   TRACER WIRE SHALL BE INSTALLED WITH ALL NEW LATERALS.
   TRACER WIRE BOXES SHALL BE PROVIDED AND LOCATED 3.5' BEHIND THE BACK OF CURB.
   "SEWER" SHALL BE STAMPED IN THE LID OF THE ACCESS BOX.
   TRACER WIRE SHALL EXTEND TO THE RIGHT OF WAY.
   ALL LATERAL ENDS SHALL BE MARKED WITH A TREATED 4" X 4" POST AND THE TOP OF THE POST SHALL BE PAINTED GREEN. LATERAL END SHALL BE CAPPED WITH A GLUED ON CAP.

   LATERALS ARE NOT ALLOWED TO BE CONNECTED DIRECTLY INTO A MANHOLE.

   ALL SANITARY MANHOLE CASTINGS SHALL BE NEENAH R-1550 WITH TYPE B NON-ROCKING LIDS AND CONCEALED PICK HOLES.

   SANITARY MANHOLES SHALL HAVE EXTERNAL CHIMNEY SEALS.

   ALL MANHOLE JOINTS SHALL BE WRAPPED WITH GATOR WRAP OR APPROVED EQUAL. EXCAVATED MATERIAL FROM THE TRENCH NOT SUITABLE FOR BACKFILL AS DEEMED BY THE PUBLIC SERVICES DIRECTOR SHALL BE HAULED OFF-SITE AND SELECT TRENCH BACKFILL WILL BE REQUIRED.

   ALL SANITARY SEWER MAINS WILL BE REQUIRED TO BE TELEVISED. 2 COPIES OF THE TELEVISING REPORT AND DVD SHALL BE PROVIDED TO THE PUBLIC SERVICES DIRECTOR. MANDRELL TESTING IS ALSO REQUIRED ON ALL SANITARY SEWER. LOW PRESSURE AIR TESTS ARE REQUIRED ON ALL SANITARY SEWER CONSTRUCTION.

   ALL MANHOLES INSTALLED OUTSIDE OF THE RIGHT-OF-WAY SHALL HAVE A RIM ELEVATION A MINIMUM OF 1' ABOVE THE PROPOSED GROUND AND BE MARKED WITH A TREATED 4" X 4" POST AND HAVE A SIGN WITH THE WORDS "SANITARY SEWER" ATTACHED TO THE POST.

   LATERAL DEPTH AT THE RIGHT-OF-WAY SHALL NOT EXCEED 12' WITHOUT PROPER JUSTIFICATION. VARIENCES FROM THIS MAP BE APPROVED BY THE PUBLIC SERVICES DIRECTOR.

   ADJUSTMENT RINGS SHALL HAVE A MINIMUM HEIGHT OF 4" AND A MAXIMUM HEIGHT OF 12". ADJUSTMENT RINGS SHALL BE POLYETHYLENE PLASTIC UNLESS OTHERWISE APPROVED. MAINTAIN A MINIMUM SEPARATION OF 8' OF HORIZONTAL SEPARATION BETWEEN WATER MAIN AND SANITARY SEWER.
   SANITARY MANHOLES SHALL BE CONSTRUCTED WITH STEPS.
7. EXTREME CAUTION MUST BE FOLLOWED REGARDING THE COMPACTION OF ALL UTILITY TRENCHES. MECHANICALLY COMPACTED GRANULAR BACKFILL IS REQUIRED UNDER AND WITHIN 5 FEET OF ALL PAVEMENT INCLUDING SIDEWALKS. FLOODING OF BACKFILL MATERIAL IS NOT ALLOWED. THE COST OF THIS GRANULAR MATERIAL AND ITS COMPACTION IS CONSIDERED INCIDENTAL AND SHALL BE INCLUDED IN THE COST OF THE PROPOSED UTILITY.
8. PRIOR TO FINAL PAVING OPERATIONS, THE UTILITY CONTRACTOR SHALL ADJUST ALL MANHOLE AND INLET RIMS AND VALVE BOXES TO FINISHED GRADE.
9. THE CONTRACTOR IS RESPONSIBLE FOR PROVIDING THE OWNER WITH A SET OF MARKED-UP PRINTS SHOWING ALL CHANGES MADE DURING THE CONSTRUCTION PROCESS. ANY CHANGES TO THE DRAWINGS OR ADDITIONAL ITEMS MUST BE REPORTED TO THE OWNER.
10. TRACER WIRE SHALL BE INSTALLED ON ALL BURIED NON-METALLIC SANITARY SEWERS, PRIVATE SANITARY INTERCEPTOR MAIN SEWERS, STORM BUILDING SEWERS, AND PRIVATE STORM INTERCEPTOR MAIN SEWERS THAT DISCHARGE TO MUNICIPAL MAINS. TRACER WIRE SHALL BE A MINIMUM OF 18-GAUGE, INSULATED, SINGLE-CONDUCTOR COPPER WIRE OR EQUIVALENT. TRACER WIRE COLOR SHALL BE BLUE FOR POTABLE WATER, GREEN FOR SANITARY SEWER, AND BROWN FOR STORM SEWER.

WATER MAIN NOTES

1. THE CONTRACTOR SHALL VERIFY THE LOCATION OF ALL EXISTING UTILITIES PRIOR TO THE START OF CONSTRUCTION.
2. THE PROPOSED IMPROVEMENTS SHALL BE CONSTRUCTED ACCORDING TO WISCONSIN ADMINISTRATIVE CODE. SECTION SPS 382-384, LATEST EDITION, THE STANDARD SPECIFICATIONS FOR SEWER AND WATER CONSTRUCTION IN WISCONSIN, LATEST EDITION, AND THE LOCAL ORDINANCES AND SPECIFICATIONS.
3. BEFORE PROCEEDING WITH ANY UTILITY CONSTRUCTION, THE CONTRACTOR SHALL EXCAVATE EACH EXISTING LATERAL OR POINT OF CONNECTION AND VERIFY THE LOCATION AND ELEVATION OF ALL UTILITIES. IF ANY EXISTING UTILITIES ARE NOT AS SHOWN ON THE DRAWINGS, THE CONTRACTOR SHALL NOTIFY THE ENGINEER IMMEDIATELY FOR POSSIBLE REDESIGN.
4. PROPOSED SANITARY SEWER, WATER MAIN, AND INTERNALLY CONNECTED STORM SEWER SHOWN ON THIS PLAN SHALL TERMINATE AT POINT FIVE (5) FEET FROM THE EXTERIOR BUILDING WALL. STORM SEWER CONNECTING TO EXTERIOR DOWN SPOUTS SHALL BE PER DETAILS ON THE ARCHITECTURAL PLANS. THE EXACT LOCATION OF ALL DOWN SPOUTS SHALL BE PER THE ARCHITECTURAL PLANS.
5. MATERIALS FOR WATER SERVICE SHALL BE AS FOLLOWS:
   WATER MAIN SHALL BE DUCTILE IRON AND BEDDED WITH TYPE 3 EMBEDMENT (SAND OR SAND SCREENINGS)

   WATER MAIN SHALL BE INSTALLED WITH TRACER WIRE. TRACER WIRE SHALL SURFACE AT ALL HYDRANTS IN A CONDUIT OR A TRACER WIRE ACCESS BOX.

   ALL MAINS SHALL BE A MINIMUM OF 8" IN DIAMETER WITH THE EXCEPTION OF HYDRANT LEADS THAT SHALL BE 6".

   WATER MAINS SHALL HAVE A MINIMUM COVER OF 6.5'.
   ALL WATER MAINS ARE REQUIRED TO BE LOOPED.

   MECHANICAL JOINT FITTINGS WITH MEGA-LUGS ARE REQUIRED FOR ALL DIRECTIONAL CHANGE FITTINGS AND WATER MAIN ENDS. ALL BOLTS SHALL BE STAINLESS STEEL. ALL FITTINGS SHALL BE "MADE IN AMERICA" CERTIFIED.

   CORPORATION STOPS SHALL BE MUELLER H15008.

   WATER VALVES SHALL BE AMERICAN FLOW CONTROL SERIES 2500 RESILIENT WEDGE GATE VALVE.

   WATER MAINS SHALL BE A MINIMUM OF 4' OFF THE FLAG OF THE CURB.

   FIRE HYDRANTS SHALL BE LOCATED 3.5' BEHIND THE BACK OF CURB AND HYDRANT VALVES SHALL BE PLACED IN THE STREET.

   A FIRE HYDRANT WILL BE REQUIRED AT THE END OF ALL DEAD END LINES.

   FIRE HYDRANTS SHALL BE WATEROUS PACER WB67 WITH A STORZ NOZZLE.

   CURB BOXES SHALL BE BINGHAM AND TAYLOR BUFFALO TYPE AND INSTALLED WITH THE EXTENSION ROD AND GUIDE RING.

   CURB VALVES SHALL BE MUELLER H15209.

   CURB BOXES SHALL BE LOCATED 3.5' BEHIND THE BACK OF CURB.

   ALL LATERAL/WATER SERVICE ENDS SHALL BE MARKED WITH A TREATED 4" X 4" POST AND THE TOP OF THE POST SHALL BE PAINTED BLUE.

   EXCAVATED MATERIAL FROM THE TRENCH NOT SUITABLE FOR BACKFILL AS DEEMED BY THE PUBLIC SERVICES DIRECTOR SHALL BE HAULED OFF-SITE AND SELECT AND SELECT TRENCH BACKFILL WILL BE REQUIRED.

   PROVIDE A 2" THICK STYROFOAM INSULATION BETWEEN WATER MAIN AND ALL STORM SEWER CROSSINGS.

   WATER MAINS SHALL UNDERGO A PRESSURE AND LEAKAGE TEST. SERVICES SHALL BE TESTED TO THE CURB STOP. SERVICES OF 4" AND LARGER WITH JOINTED PIPE SHALL BE TESTED AGAINST THE VALVE WITH A SECOND TEST OUT TO THE PLUG. THE SECOND TEST MAY BE SHORTER DURATION AS APPROVED BY THE PUBLIC SERVICES DIRECTOR.

   A SIGN SHALL BE INSTALLED ADJACENT TO ANY VALVES LOCATED OUTSIDE OF THE RIGHT-OF-WAY WITH THE TEXT "WATER VALVE". SIGNS SHALL BE MOUNTED TO A TREATED 4'x4' WOOD POST.

   WATER SERVICES 4" OF DIAMETER OR GREATER SHALL HAVE VALVES LOCATED IN THE STREET.
6. EXTREME CAUTION MUST BE FOLLOWED REGARDING THE COMPACTION OF ALL UTILITY TRENCHES. MECHANICALLY COMPACTED GRANULAR BACKFILL IS REQUIRED UNDER AND WITHIN 5 FEET OF ALL PAVEMENT INCLUDING SIDEWALKS. FLOODING OF BACKFILL MATERIAL IS NOT ALLOWED. THE COST OF THIS GRANULAR MATERIAL AND ITS COMPACTION IS CONSIDERED INCIDENTAL AND SHALL BE INCLUDED IN THE COST OF THE PROPOSED UTILITY.

STORM WATER DRAINAGE NOTES :

1. THE CONTRACTOR SHALL VERIFY THE LOCATION OF ALL EXISTING UTILITIES PRIOR TO THE START OF CONSTRUCTION.
2. UNLESS OTHERWISE INDICATED, USE REINFORCED, PRECAST, CONCRETE MAINTENANCE HOLES AND CATCHBASINS CONFORMING TO ASTM C478, FURNISHED WITH WATER STOP RUBBER GASKETS AND PRECAST BASES. JOINTS FOR ALL PRECAST MAINTENANCE HOLE SECTIONS SHALL HAVE CONFINED, RUBBER "O"-RING GASKETS IN ACCORDANCE WITH ASTM C923. THE INSIDE BARREL DIAMETER SHALL NOT BE LESS THAN 48 INCHES.
3. ALL JOINTS AND CONNECTIONS TO CATCHBASINS OR MANHOLES SHALL BE WATERTIGHT. USE RESILIENT RUBBER SEALS, WATERSTOP GASKETS, OR APPROVED EQUAL. CEMENT MORTAR JOINTS ARE NOT ALLOWED.
4. INSTALL CATCHBASIN CASTINGS WITH SPECIFIED TOP ELEVATION AT THE FRONT RIM.
5. USE HDPE SOLID WALL PIPE WHEN CALLED OUT ON THE PLANS.
6. PVC PIPE: USE SOLID-CORE, SDR-35, ASTM D3034 POLYVINYL CHLORIDE (PVC) PIPE FOR DESIGNATED PVC STORM SEWER SERVICES 4 TO 15-INCHES IN DIAMETER. USE SOLID-CORE, SDR-35, ASTM F679 POLYVINYL CHLORIDE (PVC) PIPE FOR DESIGNATED PVC STORM SEWER SERVICES 18 TO 27-INCHES IN DIAMETER. JOINTS FOR ALL STORM SEWER SHALL HAVE PUSH-ON JOINTS WITH ELASTOMERIC GASKETS. USE OF SOLVENT CEMENT JOINTS IS ALLOWED FOR BUILDING SERVICES. SOLVENT CEMENT JOINTS IN PVC PIPE MUST INCLUDE USE OF A PRIMER WHICH IS OF CONTRASTING COLOR TO THE PIPE AND CEMENT. PIPE WITH SOLVENT CEMENT JOINTS SHALL BE JOINED WITH PVC CEMENT CONFORMING TO ASTM D2564. LAY ALL PVC PIPE ON A CONTINUOUS GRANULAR BED. INSTALLATION MUST COMPLY WITH ASTM D2321.
7. TESTING: TEST ALL PORTIONS OF STORM SEWER THAT ARE WITHIN 10 FEET OF BUILDINGS, WITHIN 10 FEET OF BURIED WATER, LINES, WITHIN 50 FEET OF WATER WELLS, OR THAT PASS THROUGH SOIL OR WATER IDENTIFIED AS BEING CONTAMINATED. TEST ALL FLEXIBLE STORM SEWER LINES FOR DEFLECTION AFTER THE SEWER LINE HAS BEEN INSTALLED AND BACKFILL HAS BEEN IN PLACE FOR AT LEAST 30 DAYS. NO PIPE SHALL EXCEED A DEFLECTION OF 5%. IF THE TEST FAILS, MAKE NECESSARY REPAIRS AND RETEST.
8. INSTALL DETECTABLE UNDERGROUND MARKING TAPE DIRECTLY ABOVE ALL PVC, POLYETHYLENE, AND OTHER NONCONDUCTIVE UNDERGROUND UTILITIES AT A DEPTH OF 457 MM (18 INCHES) BELOW FINISHED GRADE, UNLESS OTHERWISE INDICATED. BRING THE TAPE TO THE SURFACE AT VARIOUS LOCATIONS IN ORDER TO PROVIDE CONNECTION POINTS FOR LOCATING UNDERGROUND UTILITIES. INSTALL BLUE RHINO TRIVIEW FLEX TEST STATIONS, OR APPROVED EQUAL, WITH BLACK CAPS AT EACH SURFACE LOCATION.
9. TRACER WIRE: LOCATING REQUIREMENTS - A MEANS TO LOCATE BURIED UNDERGROUND EXTERIOR NON METALLIC SEWERS/MAINS MUST BE PROVIDED WITH TRACER WIRE OR OTHER METHODS IN ORDER TO BE LOCATED IN ACCORD WITH THE PROVISIONS OF THESE CODE SECTIONS AS PER 182.0715(2R) OF THE STATUTES.
9. THE MINIMUM DEPTH OF COVER FOR BUILDING AND CANOPY ROOF DRAIN LEADERS WITHOUT INSULATION IS 5 FEET. INSULATE ROOF DRAIN LEADERS AT LOCATIONS WHERE THE DEPTH OF COVER IS LESS THAN 5 FEET. PROVIDE A MINIMUM INSULATION THICKNESS OF 2 INCHES. THE INSULATION MUST BE AT LEAST 4 FEET WIDE AND CENTERED ON THE PIPE. INSTALL THE INSULATION BOARDS 6 INCHES ABOVE THE TOPS OF THE PIPES ON MECHANICALLY COMPACTED AND LEVELED PIPE BEDDING MATERIAL. USE HIGH DENSITY, CLOSED CELL, RIGID BOARD MATERIAL EQUIVALENT TO DOW STYROFOAM HI-40 PLASTIC FOAM INSULATION.
10. CLEANOUTS: INSTALL CLEANOUTS ON ALL ROOF DRAINS IN ACCORDANCE WITH S.P.S 382.35 (3)(C)(1.). THE DISTANCE BETWEEN CLEANOUTS IN HORIZONTAL PIPING SHALL NOT EXCEED 100 FEET FOR PIPES 10-INCHES AND UNDER IN SIZE. CLEANOUTS SHALL BE OF THE SAME NOMINAL SIZE AS THE PIPES THEY SERVE. INSTALL A METER BOX FRAME AND SOLID LID (NEENAH R-1914-A, OR APPROVED EQUAL) OVER ALL CLEANOUTS.
11. INSTALL ALL PIPE WITH THE ASTM IDENTIFICATION NUMBERS ON THE TOP FOR INSPECTION. COMMENCE PIPE LAYING AT THE LOWEST POINT IN THE PROPOSED SEWER LINE. LAY THE PIPE WITH THE BELL END OR RECEIVING GROOVE END OF THE PIPE POINTING UPGRADE. WHEN CONNECTING TO AN EXISTING PIPE, UNCOVER THE EXISTING PIPE IN ORDER TO ALLOW ANY ADJUSTMENTS IN THE PROPOSED LINE AND GRADE BEFORE LAYING ANY PIPE. DO NOT LAY PIPES IN WATER OR WHEN THE TRENCH CONDITIONS ARE UNSUITABLE FOR SUCH WORK.

eppstein uhen : architects
milwaukee 333 East Chicago Street Milwaukee, Wisconsin 53202 telephone 414.271.5350
madison 309 West Johnson Street, Suite 202 Madison, Wisconsin 53703 telephone 608.442.5350

WS DEVELOPMENT
33 BOYLSTON ST, STE 3000
CHESTNUT HILL, MA 02467
P 617.232.8900

SNYDER & ASSOCIATES
5010 VOGES ROAD
MADISON, WISCONSIN 53718
608-838-0444

PROJECT INFORMATION

HILLDALE SHOPPING CENTER

HILLDALE

702 N Midvale Blvd
Madison, WI 53705

ISSUANCE AND REVISIONS

#	DATE	DESCRIPTION
	3/13/2023	CITY SUBMITTAL

KEY PLAN

SHEET INFORMATION

PROJECT MANAGER	SJA
PROJECT NUMBER	120.0311.30

UTILITY NOTES

C 500

© Eppstein Uhen Architects, Inc.

V:\Projects\2020\120.0311.30\CAD\120.0311.30 P500.dwg ALEXANDER KEEFE, UTILITY NOTES, 2023/03/10, 2:48 PM, ARCH FULL BLEED E1 (30.00 X 42.00 INCHES)

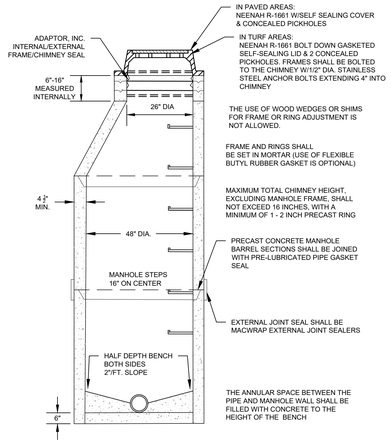

1 / C 501 SANITARY MANHOLE DETAIL
NOT TO SCALE

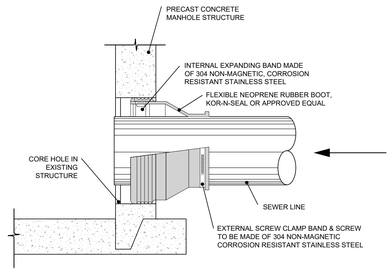

4 / C 501 BOOT CONNECTION DETAIL
NOT TO SCALE

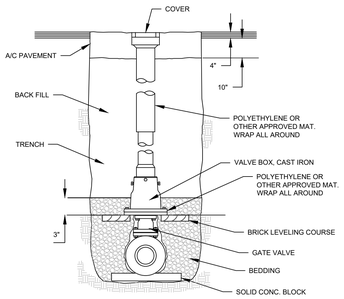

7 / C 501 WATER VALVE BOX DETAIL
NOT TO SCALE

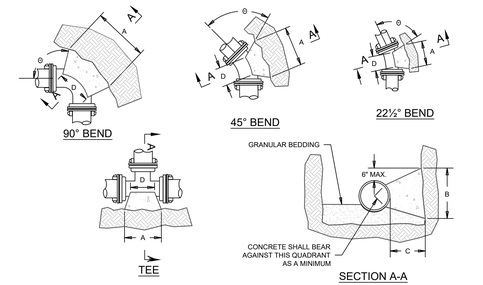

NOTES:
1. WOOD BLOCKING MAY NOT BE USED. ONLY SOLID CONCRETE BLOCKS ARE ALLOWED.
2. DIMENSION "D" SHALL BE AS LARGE AS POSSIBLE, BUT THE CONCRETE SHALL NOT INTERFERE WITH THE MECHANICAL JOINTS.
3. DIMENSION "C" SHALL BE AT LEAST 6 INCHES, AND LARGE ENOUGH TO MAKE THE "B" ANGLE EQUAL TO OR GREATER THAN 45 DEGREES WITH THE DIMENSION "A" AS SHOWN ON THE TABLE, OR GREATER, AND WITH DIMENSION "D" AS LARGE AS POSSIBLE.
4. CONCRETE SHALL BE CLASS "CC".
5. ALL BUTTRESSED JOINTS SHALL INCLUDE MEGALUGS AND CONCRETE BUTTRESSING.

PIPE SIZE	BUTTRESS DIMENSIONS							
	TEES *		22.5° BEND		45° BEND		90° BEND	
	A	B	A	B	A	B	A	B
6	1'-3"	1'-0"	1'-0"	1'-0"	1'-0"	1'-0"	1'-4"	1'-2"
8	1'-6"	1'-4"	1'-0"	1'-0"	1'-4"	1'-2"	1'-10"	1'-6"
10/12	2'-3"	2'-0"	1'-4"	1'-4"	1'-10"	1'-10"	2'-8"	2'-3"
14/16	3'-2"	2'-6"	1'-10"	1'-8"	2'-6"	2'-4"	3'-10"	2'-10"
18/20	4'-0"	3'-0"	2'-4"	2'-0"	3'-3"	2'-10"	5'-0"	3'-4"
22/24	5'-3"	3'-4"	2'-10"	2'-4"	4'-0"	3'-3"	6'-4"	3'-10"
30	6'-3"	4'-3"	3'-6"	3'-0"	5'-4"	3'-10"	8'-0"	4'-8"

DIMENSIONS IN THE TABLE ARE BASED ON A WATER PRESSURE OF 150 PSI AND SOIL RESISTANCE OF 2000 LBS./SQ.FT.

* = FOR TEE THIS WILL BE THE BRANCH PIPE

10 / C 501 BUTRESS DETAIL
NOT TO SCALE

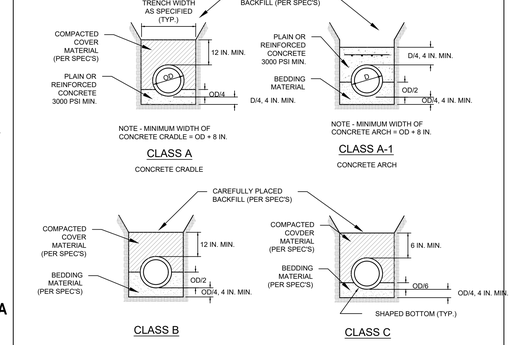

2 / C 501 SANITARY SEWER CLEANOUT
NOT TO SCALE

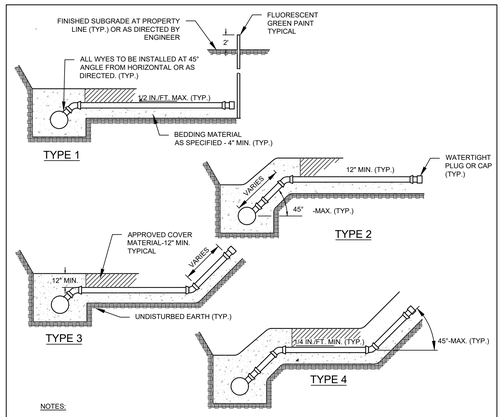

NOTES:
1. BEDDING MATERIAL SHALL BE 3/4" CLEAR STONE, UNLESS OTHERWISE APPROVED BY CITY ENGINEER.
2. ENDS OF ALL LATERALS TO BE 10 FT. MIN. COVER AT END, AND BE MARKED BOTH BELOW AND ABOVE SURFACE WITH 4" LONG 2" x 4".
3. ALL NEW CONSTRUCTION TO BE PLACED ON UNDISTURBED GROUND OR SAND COMPACTED TO 95% MAXIMUM DENSITY.
4. LATERAL MATERIAL INCLUDING FITTINGS SHALL BE OF SAME MATERIAL AS THE SEWER MAIN, OR AS DIRECTED BY ENGINEER.
5. THE PIPE MUST EXTEND AT LEAST 5' LATERALLY BEYOND THE PROPERTY LINE

5 / C 501 SEWER LATERAL DETAIL
NOT TO SCALE

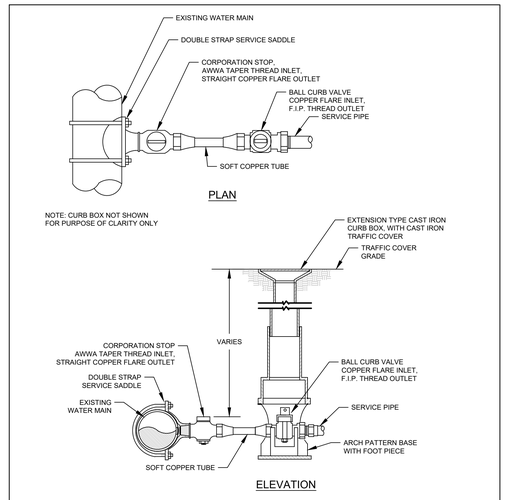

8 / C 501 WATER MAIN CONNECTION DETAIL
NOT TO SCALE

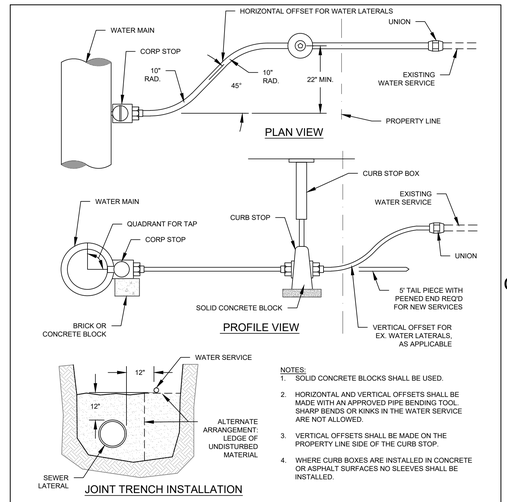

NOTES:
1. SOLID CONCRETE BLOCKS SHALL BE USED.
2. HORIZONTAL AND VERTICAL OFFSETS SHALL BE MADE WITH AN APPROVED PIPE BENDING TOOL. SHARP BENDS OR KINKS IN THE WATER SERVICE ARE NOT ALLOWED.
3. VERTICAL OFFSETS SHALL BE MADE ON THE PROPERTY LINE SIDE OF THE CURB STOP.
4. WHERE CURB BOXES ARE INSTALLED IN CONCRETE OR ASPHALT SURFACES NO SLEEVES SHALL BE INSTALLED.

11 / C 501 WATER SERVICE INSTALLATION DETAIL
NOT TO SCALE

NOTES:
1. ALL PVC AND ABS SEWER MAINS AND LATERALS SHALL BE CLASS "B" MIN., OR AS CALLED FOR IN THE SPECIAL PROVISIONS.
2. ALL BEDDING AND COVER MATERIALS SHALL BE AS SPECIFIED AND SHALL BE SUBJECT TO THE APPROVAL OF THE ENGINEER.
3. UNDERCUT SHALL BE IN ACCORDANCE WITH SECTION 3 OF THE STORM AND SANITARY SEWER STANDARD SPECIFICATIONS.

3 / C 501 SANITARY SEWER BEDDING DETAIL
NOT TO SCALE

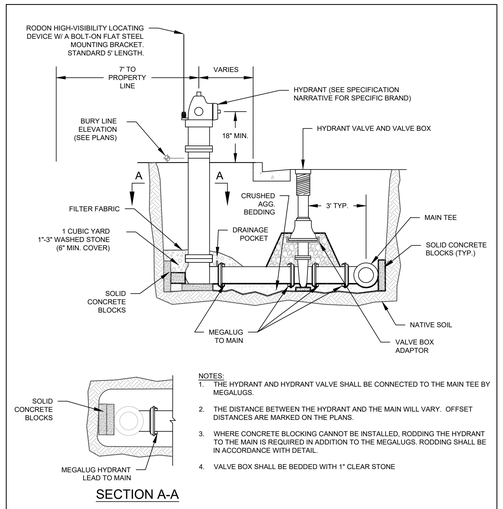

NOTES:
1. THE HYDRANT AND HYDRANT VALVE SHALL BE CONNECTED TO THE MAIN TEE BY MEGALUGS.
2. THE DISTANCE BETWEEN THE HYDRANT AND THE MAIN WILL VARY. OFFSET DISTANCES ARE MARKED ON THE PLANS.
3. WHERE CONCRETE BLOCKING CANNOT BE INSTALLED, RODDING THE HYDRANT TO THE MAIN IS REQUIRED IN ADDITION TO THE MEGALUGS. RODDING SHALL BE IN ACCORDANCE WITH DETAIL.
4. VALVE BOX SHALL BE BEDDED WITH 1" CLEAR STONE

6 / C 501 STANDARD HYDRANT DETAIL
NOT TO SCALE

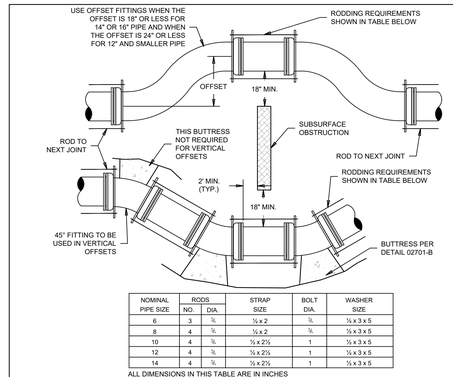

NOMINAL PIPE SIZE	RODS NO.	RODS DIA.	STRAP SIZE	BOLT DIA.	WASHER SIZE
6	3	⅝	⅛ x 2	¾	⅛ x 3 x 5
8	4	⅝	¼ x 2	¾	⅛ x 3 x 5
10	4	⅞	⅛ x 2½	1	⅛ x 3 x 5
12	4	⅞	⅛ x 2½	1	⅛ x 3 x 5
14	4	⅞	⅛ x 2½	1	⅛ x 3 x 5

ALL DIMENSIONS IN THIS TABLE ARE IN INCHES

NOTES:
1. ALL OFFSETS SHALL BE RESTRAINED WITH MEGALUGS. WHERE CONCRETE BUTTRESSING CANNOT BE USED, RODDING MUST BE USED IN ADDITION TO THE MEGALUGS.
2. RODS AND WASHERS TO BE ASTM A-575 MERCHANT QUALITY 0.17-0.24 CARBON. NUTS TO BE AMERICAN STANDARD HEAVY, NOT PRESSED.
3. TIE RODS, BOLTS, NUTS, BANDS AND WASHERS TO BE FURNISHED AND ASSEMBLED BY THE CONTRACTOR.
4. ALL STEEL MATERIAL TO BE GALVANIZED OR BE THOROUGHLY COATED WITH ENGINEER APPROVED COATING.
5. OFFSET FITTINGS REQUIRE CONTINUOUS RODDING IN ALL POSITIONS.
6. VERTICAL OFFSETS SHALL NOT CREATE A HIGH POINT IN THE WATER MAIN. VERTICAL OFFSETS REQUIRE THE SAME RODDING AND BUTTRESSING AS SHOWN ABOVE.

9 / C 501 OFFSET & RODDING DETAIL
NOT TO SCALE

12 / C 501 NOT USED
NOT TO SCALE

eppstein uhen : architects
milwaukee 333 East Chicago Street Milwaukee, Wisconsin 53202 telephone 414.271.5350
madison 309 West Johnson Street, Suite 202 Madison, Wisconsin 53703 telephone 608.442.5350
WS DEVELOPMENT
33 BOYLSTON ST, STE 3000 CHESTNUT HILL, MA 02467 P 617.232.8900
SNYDER & ASSOCIATES
5010 VOGES ROAD MADISON, WISCONSIN 53718 608-838-0444

PROJECT INFORMATION

HILLDALE SHOPPING CENTER

HILLDALE

702 N Midvale Blvd
Madison, WI 53705

ISSUANCE AND REVISIONS

#	DATE	DESCRIPTION
	3/13/2023	CITY SUBMITTAL

KEY PLAN

SHEET INFORMATION

PROJECT MANAGER SJA

PROJECT NUMBER 120.0311.30

UTILITY DETAILS

C 501

© Eppstein Uhen Architects, Inc.

V:\Projects\2020\120.0311.30\CAD\D120.0311.30 P500.dwg ALEXANDER KEEFE, UTILITY DETAILS, 2023/03/13, 2:48 PM, ARCH FULL BLEED E1 (30.00 X 42.00 INCHES)

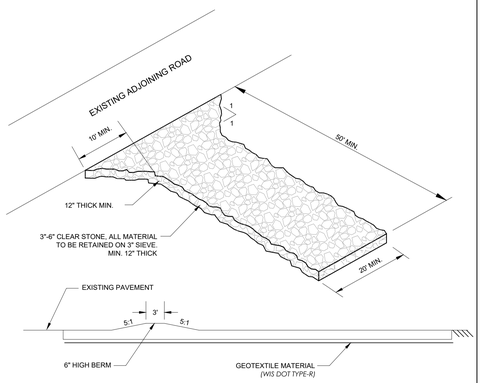

NOTE: MAINTAIN THE ROCK ENTRANCE TO PREVENT TRACKING ONTO PAVEMENT

1 / C 502 CONSTRUCTION ENTRANCE DETAIL

NOT TO SCALE

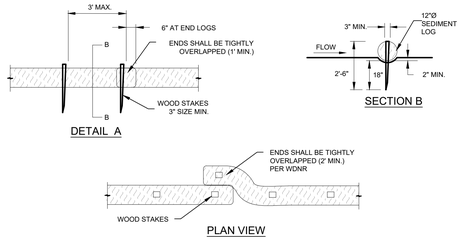

SEDIMENT LOG INSTALLATION NOTES

1. SEE PLAN VIEW FOR THE LOCATION AND LENGTH OF SEDIMENT LOG.
2. SEDIMENT LOG INDICATED ON INITIAL PLAN SHALL BE INSTALLED PRIOR TO ANY LAND-DISTURBING ACTIVITIES.
3. SEDIMENT LOG SHALL CONSIST OF STRAW, COMPOST, EXCELSIOR, OR COCONUT FIBER.
4. NOT FOR USE IN CONCENTRATED FLOW AREAS.
5. THE SEDIMENT LOG SHALL BE TRENCHED INTO THE GROUND A MINIMUM OF ½ OF THE DIAMETER OF THE SEDIMENT LOG.
6. SEDIMENT LOG SHALL BE INSTALLED AND MAINTAINED IN ACCORDANCE WITH WDNR TECHNICAL STANDARDS 1071

SEDIMENT LOG MAINTENANCE NOTES

1. THE CONTRACTOR SHALL INSPECT SEDIMENT LOGS DAILY, DURING AND AFTER ANY STORM EVENT AND MAKE REPAIRS OR CLEAN OUT UPSTREAM SEDIMENT AS NECESSARY.
2. SEDIMENT ACCUMULATED UPSTREAM OF THE SEDIMENT LOGS SHALL BE REMOVED WHEN THE UPSTREAM SEDIMENT DEPTH IS WITHIN ½ THE HEIGHT OF THE CREST OF LOG.
3. SEDIMENT LOGS SHALL BE REMOVED AT THE END OF CONSTRUCTION. IF ANY DISTURBED AREA EXISTS AFTER REMOVAL, IT SHALL BE DRILL SEEDED AND CRIMP MULCHED OR OTHERWISE STABILIZED.

4 / C 502 SEDIMENT LOG DETAIL

NOT TO SCALE

6 / C 502 NOT USED

NOT TO SCALE

EROSION CONTROL NOTES

1. THE CONTRACTOR IS RESPONSIBLE FOR OBTAINING COPIES OF ALL PERMITS, INCLUDING WISDNR WPDES DISCHARGE PERMIT (IF APPLICABLE), COUNTY AND LOCAL EROSION CONTROL PERMIT. CONTRACTOR IS RESPONSIBLE FOR ABIDING BY ALL PERMIT REQUIREMENTS AND RESTRICTIONS.
2. ALL EROSION CONTROL MEASURES SHALL BE INSTALLED PRIOR TO LAND DISTURBING ACTIVITIES.
3. ALL INSTALLATION AND MAINTENANCE OF EROSION CONTROL PRACTICES SHALL BE IN ACCORDANCE WITH THE APPLICABLE WISCONSIN DEPARTMENT OF NATURAL RESOURCES (WDNR) TECHNICAL STANDARD, FOUND AT: http://dnr.wi.gov/topic/stormwater/standards/const_standards.html OR THE WISCONSIN CONSTRUCTION SITE BEST MANAGEMENT PRACTICE HANDBOOK IF A TECHNICAL STANDARD IS NOT AVAILABLE.
4. ALL EROSION CONTROL FACILITIES SHALL BE MAINTAINED THROUGHOUT THE DURATION OF THE PROJECT AND WARRANTY PERIOD IN CONFORMANCE WITH ALL APPLICABLE PERMITS ISSUED FOR THE PROJECT.
5. ALL EROSION AND SEDIMENTATION CONTROL PRACTICES SHALL BE INSPECTED WEEKLY AND WITHIN 24 HOURS AFTER EVERY PRECIPITATION EVENT THAT PRODUCES 0.5 INCHES OF RAIN OR MORE DURING A 24 HOUR PERIOD. REPAIRS SHALL BE MADE IMMEDIATELY TO EROSION CONTROL PRACTICES AS NECESSARY.
6. TEMPORARY STOCKPILES SHALL BE STABILIZED IF NOT REMOVED IN 10 DAYS. PERIMETER CONTROL ON THE DOWNHILL SIDE SHALL BE IN PLACE AT ALL TIMES (SILT FENCE OR APPROVED EQUAL).
7. TEMPORARY SEED MIXTURE SHALL CONFORM TO 630.2.1.5.1.4 OF THE WISDOT STANDARD SPECIFICATIONS USE WINTER WHEAT OR RYE FOR FALL PLANTINGS STARTED AFTER SEPTEMBER 1.
8. DISTURBED AREAS THAT CANNOT BE STABILIZED WITH A DENSE GROWTH OF VEGETATION BY SEEDING AND MULCHING DUE TO TEMPERATURE OR TIMING OF CONSTRUCTION, SHALL BE STABILIZED BY APPLYING ANIONIC POLYACRYLAMIDE (PAM) IN ACCORDANCE WITH WDNR TECHNICAL STANDARD 1050.
9. SEDIMENT SHALL BE REMOVED FROM THE SEDIMENT BASINS TO MAINTAIN A THREE FOOT DEPTH OF TREATMENT, MEASURED BELOW THE NORMAL WATER ELEVATION. SEDIMENT WILL BE REMOVED FROM THE DIVERSION DITCHES WHEN IT REACHES HALF THE HEIGHT OF THE DITCH. SEDIMENT WILL BE REMOVED FROM BEHIND THE SILT FENCE AND DITCH CHECKS WHEN IT REACHES HALF THE HEIGHT OF THE FENCE/BALE THE SILT FENCE AND DITCH CHECKS SHALL BE REPAIRED AS NECESSARY TO MAINTAIN A BARRIER.
10. ALL WATER FROM CONSTRUCTION DEWATERING SHALL BE TREATED IN ACCORDANCE WITH WDNR TECHNICAL STANDARD 1061 PRIOR TO DISCHARGE TO WATERS OF THE STATE, WETLANDS, OR OFFSITE.
11. THE CONTRACTOR IS RESPONSIBLE FOR INSTALLATION OF ANY ADDITIONAL EROSION CONTROL MEASURES NECESSARY TO PREVENT EROSION AND SEDIMENTATION. ALL DISTURBED AREAS ARE TO DRAIN TO APPROVED SEDIMENT CONTROL MEASURES AT ALL TIMES DURING SITE DEVELOPMENT UNTIL FINAL STABILIZATION IS ACHIEVED. DEPENDING ON HOW THE CONTRACTOR GRADES THE SITE, IT MAY BE NECESSARY TO INSTALL TEMPORARY EROSION CONTROL AND/OR SEDIMENT TRAPS IN VARIOUS LOCATIONS THROUGHOUT THE PROJECT. TEMPORARY SEDIMENT TRAPS SHALL BE DESIGNED, INSTALLED, AND MAINTAINED IN ACCORDANCE WITH WDNR TECHNICAL STANDARD 1063.
12. TRACKED MATERIAL TO ADJACENT STREETS SHALL BE COLLECTED AT THE END OF EACH WORKING DAY OR AS REQUIRED BY THE LOCAL MUNICIPALITY.
13. DUST CONTROL SHALL BE PROVIDED AS NECESSARY IN ACCORDANCE WITH WDNR TECHNICAL STANDARD 106B.
14. FINAL STABILIZATION OF LANDSCAPED AREAS SHALL BE IN ACCORDANCE WITH THE APPROVED LANDSCAPE PLAN.
15. ALL SEEDED AREAS WILL BE FERTILIZED, RESEEDED AS NECESSARY, AND MULCHED ACCORDING TO SPECIFICATIONS IN THE APPROVED LANDSCAPE PLAN TO MAINTAIN A VIGOROUS DENSE VEGETATIVE COVER.
16. THE CONTRACTOR IS RESPONSIBLE FOR PROVIDING ALL EROSION CONTROL FACILITIES AND MEASURES NECESSARY TO CONTROL EROSION AND SEDIMENTATION AT THE PROJECT SITE. THESE FACILITIES AND MEASURES MAY OR MAY NOT BE SHOWN ON THE DRAWINGS AND THEIR ABSENCE ON THE DRAWINGS DOES NOT ALLEVIATE THE CONTRACTOR FROM PROVIDING THEM. ANY MEASURES AND FACILITIES SHOWN ON THE DRAWINGS ARE THE MINIMUM ACTIONS REQUIRED.
17. ERODED MATERIAL THAT HAS LEFT THE CONSTRUCTION SITE SHALL BE COLLECTED AND RETURNED TO THE SITE BY THE CONTRACTOR.
18. AFTER FINAL VEGETATION IS ESTABLISHED, REMOVE ALL EROSION CONTROL FACILITIES. RESTORE AREAS DISTURBED BY THE REMOVALS.
19. KEEP A COPY OF THE CURRENT EROSION CONTROL PLAN ON SITE THROUGHOUT THE DURATION OF THE PROJECT.
20. COMPLETE AND STABILIZE SEDIMENT BASINS/TRAPS PRIOR TO MASS LAND DISTURBANCE TO CONTROL RUNOFF DURING CONSTRUCTION. REMOVE SEDIMENT AS NEEDED TO MAINTAIN 3 FEET OF DEPTH TO THE OUTLET, AND PROPERLY DISPOSE OF SEDIMENT REMOVED DURING MAINTENANCE. CONSTRUCT AND MAINTAIN THE SEDIMENT BASIN PER WDNR TECHNICAL STANDARDS.
21. PROPERLY DISPOSE OF ALL WASTE AND UNUSED BUILDING MATERIALS (INCLUDING GARBAGE, DEBRIS, CLEANING WASTES, OR OTHER CONSTRUCTION MATERIALS) AND DO NOT ALLOW THESE MATERIALS TO BE CARRIED BY RUNOFF INTO THE RECEIVING CHANNEL.
22. MAKE PROVISIONS FOR WATERING DURING THE FIRST 8 WEEKS FOLLOWING SEEDING OR PLANTING OF DISTURBED AREAS WHENEVER MORE THAN 7 CONSECUTIVE DAYS OF DRY WEATHER OCCUR.

eppstein uhen : architects

milwaukee 333 East Chicago Street Milwaukee, Wisconsin 53202 telephone 414.271.5350

madison 309 West Johnson Street, Suite 202 Madison, Wisconsin 53703 telephone 608.442.5350

WS DEVELOPMENT
33 BOYLSTON ST, STE 3000
CHESTNUT HILL, MA 02467
P 617.232.8900

SNYDER & ASSOCIATES
5010 VOGES ROAD
MADISON, WISCONSIN 53718
608-838-0444

PROJECT INFORMATION

HILLDALE SHOPPING CENTER

HILLDALE

702 N Midvale Blvd
Madison, WI 53705

ISSUANCE AND REVISIONS

#	DATE	DESCRIPTION
	3/13/2023	CITY SUBMITTAL

KEY PLAN

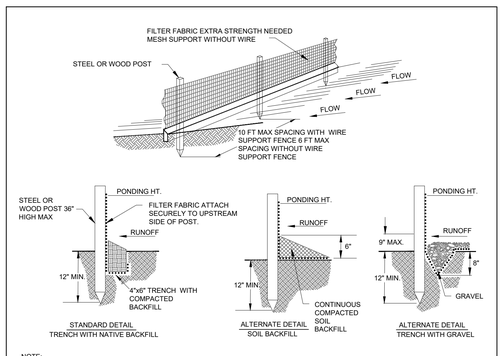

NOTE:

1. INSPECT FENCE WEEKLY AND AFTER EACH RAIN EVENT OF 0.5" AND REPAIR IF REQUIRED. REMOVE SEDIMENT WHEN NECESSARY OR WHEN SEDIMENT REACHES ½ OF FENCE HEIGHT.
2. REMOVED SEDIMENT SHALL BE DEPOSITED TO AN AREA THAT WILL NOT CONTRIBUTE SEDIMENT OFF-SITE AND CAN BE PERMANENTLY STABILIZED.
3. SILT FENCE SHALL BE PLACED ON SLOPE CONTOURS TO MAXIMIZE PONDING EFFICIENCY.
4. SILT FENCE SHALL BE INSTALLED AND MAINTAINED IN ACCORDANCE WITH WDNR TECHNICAL STANDARD 1056.

ROLL JOINTS

2 / C 502 SILT FENCE DETAIL

NOT TO SCALE

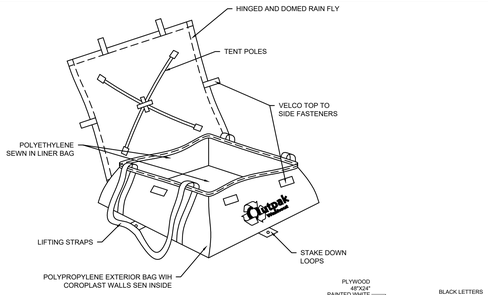

NOTES:

1. THE CONCRETE WASHOUT SHALL BE INSTALLED PRIOR TO ANY CONCRETE PLACEMENT ON THIS PROJECT.
2. AS NECESSARY, SIGNS SHALL BE PLACED THROUGHOUT THE SITE TO INDICATE THE LOCATION OF THE CONCRETE WASHOUT.
3. THE CONCRETE WASHOUT AREA WILL BE REPLACED AS NECESSARY TO MAINTAIN CAPACITY FOR LIQUID WASTE.
4. WASHOUT RESIDUE SHALL BE REMOVED FROM THE SITE AND DISPOSED OF AT AN APPROVED WASTE FACILITY.
5. DO NOT WASHOUT INTO STORM DRAINS, OPEN DITCHES, STREETS, OR STREAMS.
6. AVOID DUMPING EXCESS CONCRETE IN NON-DESIGNATED DUMPING AREAS.
7. THE WASHOUT SHALL BE USED ONLY FOR NON-HAZARDOUS WASTES.
8. CONTRACTOR MAY USE AN ALTERNATIVE MEATHOD OF CONCRETE WASHOUT WITH THE PROJECT ENGINEERS APPROVAL.

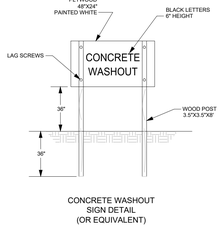

CONCRETE WASHOUT SIGN DETAIL (OR EQUIVALENT)

5 / C 502 CONCRETE WASHOUT DETAILS

NOT TO SCALE

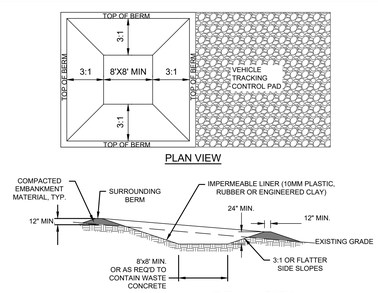

TYPICAL SECTION

CONCRETE WASHOUT AREA INSTALLATION NOTES

1. SEE EROSION CONTROL PLAN FOR LOCATIONS OF CONCRETE WASHOUT AREA(S). TO BE PLACED A MIN. OF 50' FROM DRAINAGEWAYS, BODIES OF WATER, AND INLETS.)
2. THE CONCRETE WASHOUT AREA(S) SHALL BE INSTALLED PRIOR TO ANY CONCRETE PLACEMENT ON SITE.
3. VEHICLE TRACKING CONTROL PAD IS REQ'D AT THE ACCESS POINT(S).
4. SIGNS SHALL BE PLACED AT THE CONSTRUCTION ENTRANCE, AT THE WASHOUT AREA(S), AND ELSEWHERE AS NECESSARY TO CLEARLY INDICATE THE LOCATION OF THE CONCRETE WASHOUT AREAS TO OPERATORS OF CONCRETE TRUCKS AND PUMP RIGS.
5. EXCAVATED MATERIAL SHALL BE UTILIZED IN PERIMETER BERM CONSTRUCTION.

CONCRETE WASHOUT AREA MAINTENANCE NOTES

6. THE CONCRETE WASHOUT AREA SHALL BE REPAIRED AND ENLARGED OR CLEANED OUT AS NECESSARY TO MAINTAIN CAPACITY FOR WASTED CONCRETE
7. AT THE END OF CONSTRUCTION, ALL CONCRETE SHALL BE REMOVED FROM SITE AND DISPOSED OF AT AN APPROVED WASTE SITE.
8. WHEN CONCRETE WASHOUT AREA(S) IS REMOVED, THE DISTURBED AREA SHALL BE STABILIZED PER SITE EROSION CONTROL MEASURES.
9. INSPECT WEEKLY AND DURING AND AFTER ALL STORM EVENTS. CLEAN-OUT OR COVER WASHOUT AREA PRIOR TO PREDICTED STORM EVENTS TO PREVENT OVER-FLOW.

*FLOW RATINGS SHOWN ARE 50% MAXIMIUM

NOTES:

1. ALL FRAMING IS CONSTRUCTED OF CORROSION RESISTANT STEEL FRAMING FOR PROLONGED PRODUCT LIFE.
2. TOTAL BYPASS CAPACITY WILL VARY WITH EACH SIZED DRAINAGE STRUCTURE. FLEXSTORM DESIGNS FRAMING BYPASS TO MEET OR EXCEED THE DESIGN FLOW OF THE PARTICULAR DRAINAGE STRUCTURE. CONCRETE STRUCUTRES MAY REQUIRE ADDITIONAL REVIEW.
3. UPON ORDERING THE ADS P/N CONFIRMATION OF THE DOT CALLOUT, FLEXSTORM ITEM CODE, CASTING MAKE AND MODEL, OR DETAILED DIMENSIONAL FORMS MUST BE PROVIDED.
4. FOR WRITTEN SPECIFICATIONS AND MAINTENANCE GUIDELINES VISIT WWW.INLETFILTERS.COM

INSTALLATION:

1. REMOVE GRATE
2. DROP FLEXSTORM INLET FILTER ONTO LOAD BEARING LIP OF CASTING OR CONCRETE STRUCTURE
3. REPLACE GRATE

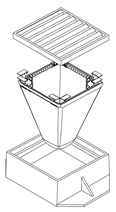

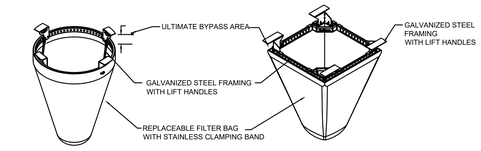

FLEXSTORM CATCH-IT INLET FILTERS FOR ROUND OPENINGS

FLEXSTORM CATCH-IT INLET FITLERS FOR SQUARE/RECTANGULAR OPENINGS

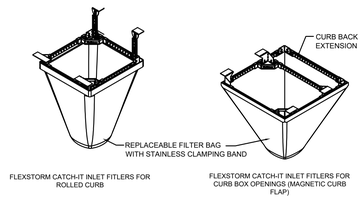

FLEXSTORM CATCH-IT INLET FITLERS FOR ROLLED CURB

FLEXSTORM CATCH-IT INLET FITLERS FOR CURB BOX OPENINGS (MAGNETIC CURB FLAP)

Product selection for FLEXSTORM CATCH-IT Filters (Temporary Inlet Protection)

Neenah Casting	Inlet Type	Grate Size	Opening Size	Bag Cap (ft^2)	Flow Ratings (CFS)		ADS P/N
					FX	Bypass	
1040/1642/1733	Round	26	24	1.9	1.5	5.4	62MRDFX
3067 w/FLAP	Curb Box	35.25 x 17.75	33.0 x 15.0	3.8	1.9	5.6	62LCBEXTFX
3067 EXTENDED BACK	Curb Box	35.25 x 17.75	33.0 x 15.0	4.4	2.3	5.8	62LCBEXTFX
3246A	Curb Box	35.75 x 23.875	33.5 x 21.0	4.2	2.2	3.3	62LCBFX
3030	Square/Rect (SQ)	23 x 16	20.5 x 13.5	1.6	1.4	2.2	62MCBFX
3067-C	Square/Rect (SQ)	35.25 x 17.75	33 x 15	3.2	2.0	5.2	62LSQFX

3 / C 502 INLET PROTECTION DETAIL

NOT TO SCALE

7 / C 502 NOT USED

NOT TO SCALE

SHEET INFORMATION

PROJECT MANAGER SJA

PROJECT NUMBER 120.0311.30

EROSION CONTROL NOTES & DETAILS

C 502

© Eppstein Uhen Architects, Inc.

V:\Projects\2020\120.0311.30\CAD\D\120.0311.30 PSD\dwg ALEXANDER KEEFE, EROSION CONTROL, NOTES & DETAILS, 2022/03/10, 2:48 PM, ARCH FULL BLEED E1 (30.00 X 42.00 INCHES)

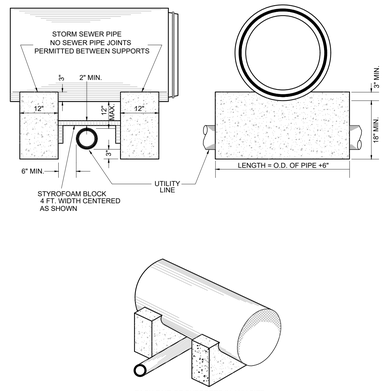

1 C 503 CONCRETE PIPE SUPPORT DETAIL
NOT TO SCALE

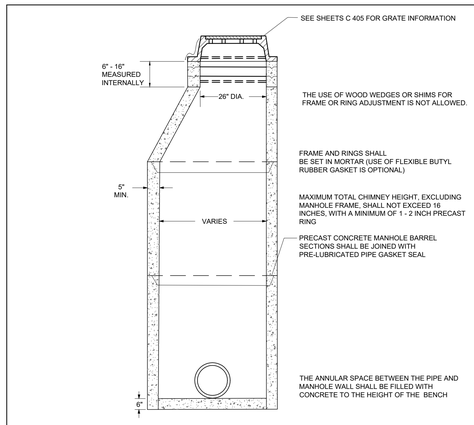

NOTES

1. FOR STRUCTURES LESS THAN 5.0' DEEP A PRECAST REINFORCED CONCRETE FLATTOP IS REQUIRED.

WALL THICKNESS SHALL BE 5" FOR 48" MANHOLE AND 6" FOR 60" MANHOLE.

4 C 503 STORM SEWER MANHOLE DETAIL
NOT TO SCALE

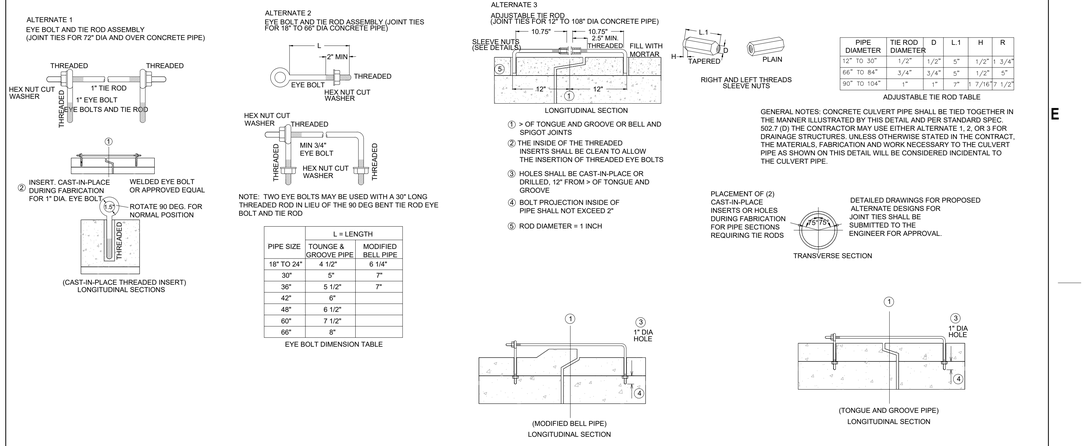

PIPE SIZE	L = LENGTH TOUNGE & GROOVE PIPE	L = LENGTH MODIFIED BELL PIPE
18" TO 24"	4 1/2"	6 1/4"
30"	5"	7"
36"	5 1/2"	7"
42"	6"	
48"	6 1/2"	
60"	7 1/2"	
66"	8"	

EYE BOLT DIMENSION TABLE

PIPE DIAMETER	TIE ROD DIAMETER	D	L.1	H	R
12" TO 30"	1"/2"	1"/2"	5"	1/2"	1 3/4"
66" TO 84"	3/4"	3/4"	5"	1/2"	5"
90" TO 104"	1"	1"	7"	7 7/16"	7 1/2"

ADJUSTABLE TIE ROD TABLE

GENERAL NOTES: CONCRETE CULVERT PIPE SHALL BE TIED TOGETHER IN THE MANNER ILLUSTRATED BY THIS DETAIL AND PER STANDARD SPEC. 502.7 (D) THE CONTRACTOR MAY USE EITHER ALTERNATE 1, 2, OR 3 FOR DRAINAGE STRUCTURES. UNLESS OTHERWISE STATED IN THE CONTRACT, THE MATERIALS, FABRICATION AND WORK NECESSARY TO THE CULVERT PIPE AS SHOWN ON THIS DETAIL WILL BE CONSIDERED INCIDENTAL TO THE CULVERT PIPE.

6 C 503 CONCRETE PIPE JOINTING DETAILS
NOT TO SCALE

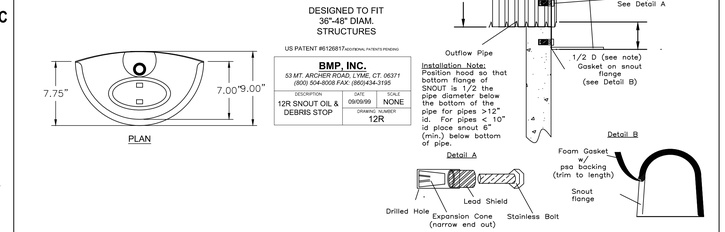

2 C 503 SNOUT OIL & DEBRIS STOP
NOT TO SCALE

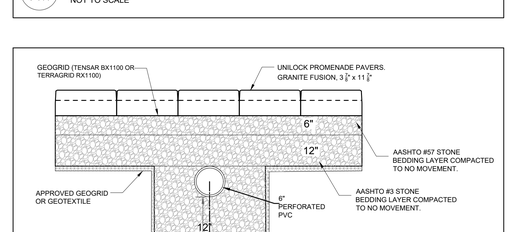

4 C 503 BIO-RETENTION OUTLET STRUCTURE
NOT TO SCALE

NOTES:

1. PAVEMENT SURFACE PERCENT VOIDS SHALL BE LESS THAN 25%.
2. PAVER BEDDING COURSE SHALL CONSIST OF 6" of AASHTO #57 AND 12" OF ASSHTO #3 AGGREGATE BASE COURSES.
3. AGGREGATE STORAGE RESERVOIR DEPTH SHALL BE A MINIMUM OF 18 INCHES.
4. IF UNDERCUT IS NEEDED UNDER THE PAVE DRAIN SECTION, ADDITIONAL AGGREGATE OF THE SAME TYPE WILL BE USED.

5 C 503 PERMEABLE PAVERS DETAIL
NOT TO SCALE

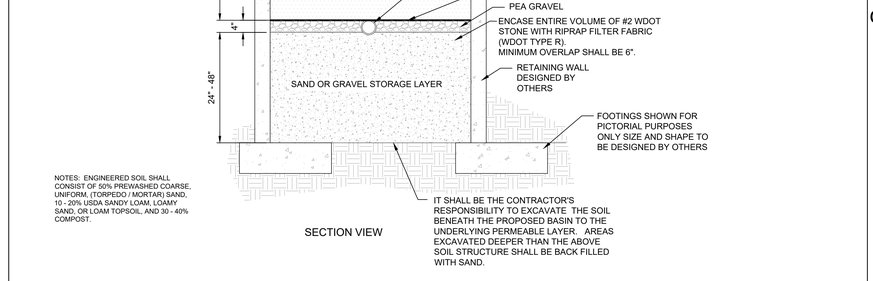

NOTES: ENGINEERED SOIL SHALL CONSIST OF 50% PREWASHED COARSE, UNIFORM, (TORPEDO / MORTAR) SAND, 10 - 20% USDA SANDY LOAM, LOAMY SAND, OR LOAM TOPSOIL, AND 30 - 40% COMPOST.

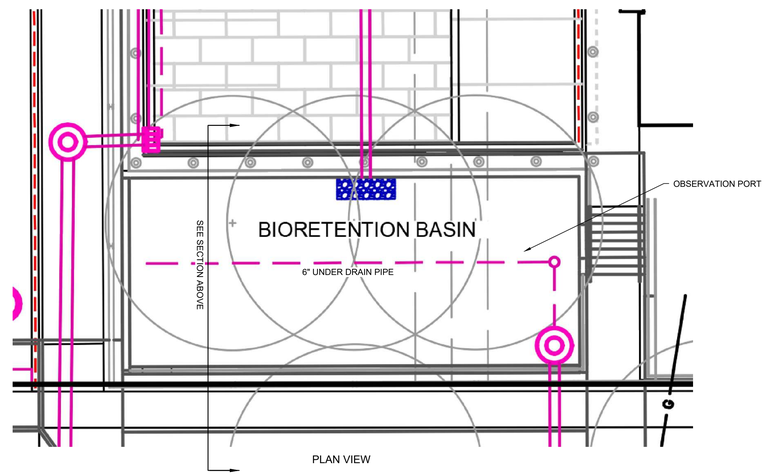

7 C 503 BIORETENTION DETAIL
NOT TO SCALE

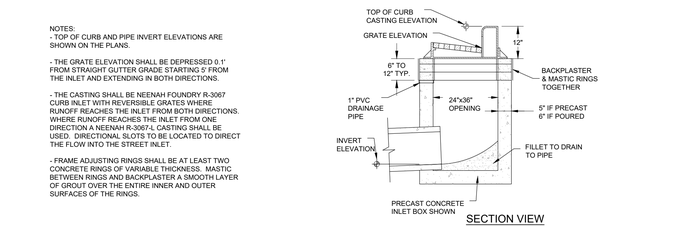

3 C 503 CURB INLET DETAIL
NOT TO SCALE

eppstein uhen : architects
milwaukee 333 East Chicago Street Milwaukee, Wisconsin 53202 telephone 414.271.5350
madison 309 West Johnson Street, Suite 202 Madison, Wisconsin 53703 telephone 608.442.5350
WS DEVELOPMENT
33 BOYLSTON ST, STE 3000 CHESTNUT HILL, MA 02467 P 617.232.8900
SNYDER & ASSOCIATES
5010 VOGES ROAD MADISON, WISCONSIN 53718 608-838-0444

PROJECT INFORMATION

HILLDALE SHOPPING CENTER

HILLDALE

702 N Midvale Blvd
Madison, WI 53705

ISSUANCE AND REVISIONS

#	DATE	DESCRIPTION
	3/13/2023	CITY SUBMITTAL

KEY PLAN

SHEET INFORMATION

PROJECT MANAGER	SJA
PROJECT NUMBER	120.0311.30

STORM WATER DETAILS

C 503

© Eppstein Uhen Architects, Inc.

V:\Projects\2020\120.0311.30\CADD\120.0311.30 P500.dwg ALEXANDER KEEFE, STORM WATER DETAILS, 2023/03/10, 2:49 PM, ARCH FULL BLEED E1 (30.00 X 42.00 INCHES)

TREE PROTECTION AREA
THE AREA INSIDE A PERIMETER ESTABLISHED AT THE CRITICAL ROOT ZONE (CRZ). THE CRZ IS EQUAL TO THE DRIPLINE, FURTHEST EXTENT OF TREE CANOPY, OR 6I EQUAL TO ONE FOOT RADIALLY FROM THE TREE FOR EVERY ONE INCH OF TRUNK DIAMETER AT BREAST HEIGHT (DBH = 4.5' ABOVE SOIL LINE), OR WHICHEVER IS GREATER.

ZONE 2
LOWER CANOPY PROTECTION
CONTACT LANDSCAPE ARCHITECT IF ANY PRUNING IS NEEDED PRIOR TO WORK IF POTENTIAL FOR DAMAGE EXISTS.

ZONE 1
DENOTES PERIMETER OF TREE PROTECTION AREA. THE FOLLOWING MUST BE AUTHORIZED BY A REGISTERED LANDSCAPE ARCHITECT PRIOR TO WORK COMMENCEMENT: ANY DIGGING, EXCAVATING, TRENCHING, CHANGING OF GRADE, OR OTHER ACTIONS THAT MAY POTENTIALLY IMPACT THE ROOTING ENVIRONMENT. WORK WITHIN THE CRZ MUST TAKE PLACE IN ACCORDANCE WITH THE CONDITIONS ESTABLISHED BY THE LANDSCAPE ARCHITECT.

ZONE 3
REQUIRED IF CONSTRUCTION OCCURS WITHIN TEN FEET OR LESS (PERMITTED INSIDE THE CRZ ONLY IF EQUIPMENT IS OPERATED EXCLUSIVELY ON EXISTING HARDSCAPE AND NO SOIL COMPACTION TAKES PLACE).

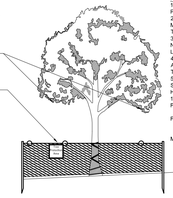

NOTES:
1. DAMAGE TO PROTECTED TREES IS SUBJECT TO PENALTY.
2. THE TREE PROTECTION AREA SHALL NOT BE MODIFIED OR REMOVED PRIOR TO CONSENT OF THE LANDSCAPE ARCHITECT.
3. ENTRANCE TO THE TREE PROTECTION AREA IS NOT PERMITTED WITHOUT CONSENT OF THE LANDSCAPE ARCHITECT.
4. MATERIALS, DEBRIS, EQUIPMENT, AND SITE AMENITIES SHALL NOT BE STORED WITHIN THE TREE PROTECTION AREA.
5. ZONE ONE TREE PROTECTION AREA FENCING SHALL BE "ORANGE SAFETY FENCING," MIN. 48" IN HEIGHT, TOP SECURED TO METAL T-POSTS WITH 14-GAUGE WIRE WOVEN THROUGH TOP OF FENCING FOR ENTIRE LENGTH.
   - T-POSTS SHALL BE PLACED SO THAT WIRE & FENCE ARE TAUT.
   - CHAIN LINK FENCING IS ALSO ACCEPTABLE.
   - "TREE PROTECTION AREA" SIGNS SHALL BE MAINTAINED IN THE CONDITION.

1 / C 504 — TREE PRESERVATION
NOT TO SCALE

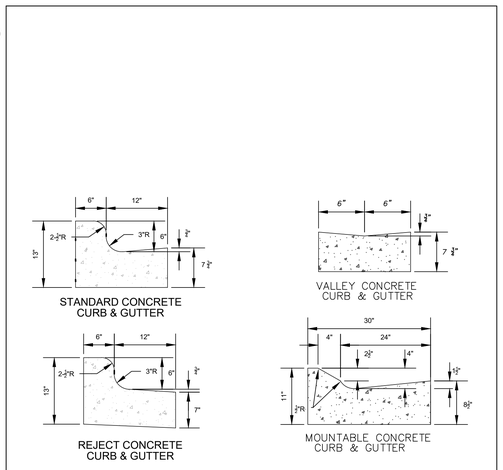

NOTES:

LATERAL CONTRACTION JOINTS SHALL BE PLACED AT INTERVALS OF NOT MORE THAN 15' NOR LESS THAN 6' IN LENGTH. THE JOINTS SHALL BE A MINIMUM OF 3" IN DEPTH EXPANSION JOINTS SHALL BE PLACED TRANSVERSELY AT RADIUS POINTS ON CURVES OF RADIUS 200' OR LESS, AND AT ANGLE POINTS, OR AS DIRECTED BY THE ENGINEER.

THE EXPANSION JOINT SHALL BE A ONE PIECE ASPHALTIC MATERIAL HAVING THE SAME DIMENSIONS AS CURB & GUTTER AT THAT STATION AND BE 1/2" THICK. IN ALL CASES, CONCRETE CURB & GUTTER SHALL BE PLACED ON THOROUGHLY COMPACTED CRUSHED STONE.

2 / C 504 — CURB & GUTTER DETAILS
NOT TO SCALE

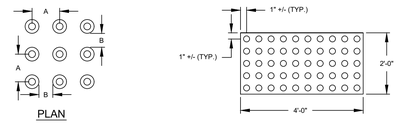

	MIN.	MAX.
A	1.6"	2.4"
B	0.65"	1.5"
C	*	*
D	0.9"	1.4"

* THE C DIMENSION IS 50% TO 65% OF YELLOW TRUNCATED DOMES PER THE D DIMENSION.

4 / C 504 — TRUNCATED DOME DETAIL
NOT TO SCALE

5 / C 504 — NOT USED
NOT TO SCALE

6 / C 504 — CITY OF MADISON PUBLIC CURB
NOT TO SCALE

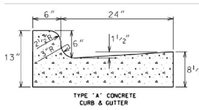

GENERAL NOTES:

LATERAL CONTRACTION JOINTS SHALL BE PLACED AT INTERVALS OF NOT MORE THAN 15' NOR LESS THAN 6' IN LENGTH. THE JOINTS SHALL BE A MINIMUM OF 3" IN DEPTH

EXPANSION JOINTS SHALL BE PLACED TRANSVERSLY AT RADIUS POINTS ON CURVES OF RADIUS 200' OR LESS, AND AT ANGLE POINTS, OR AS DIRECTED BY THE ENGINEER. THE EXPANSION JOINT SHALL BE A ONE PIECE ASPHALTIC MATERIAL HAVING THE SAME DIMENSIONS AS CURB & GUTTER AT THAT STATION AND BE ½" THICK.

IN ALL CASES, CONCRETE CURB & GUTTER SHALL BE PLACED ON THOROUGHLY COMPACTED CRUSHED STONE

7 / C 504 — NOT USED
NOT TO SCALE

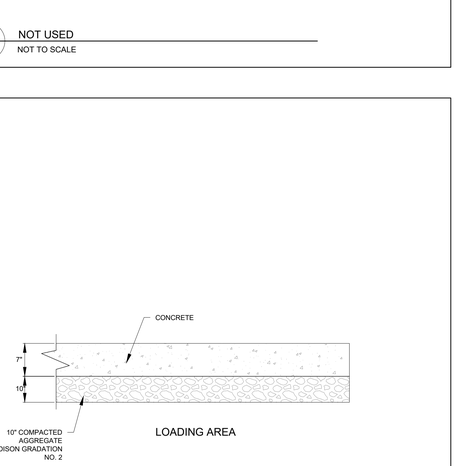

8 / C 504 — LOADING AREA DETAIL
NOT TO SCALE

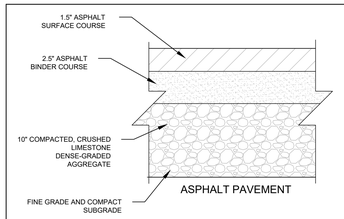

NOTES:

1. PAVEMENT SURFACE PERCENT VOIDS SHALL BE LESS THAN 25%.
2. JOINT STONE AND BEDDING COURSE SHALL CONSIST OF ASTM C-38, 8, 9, 89, OR 57 AGGREGATE.
3. AGGREGATE STORAGE RESERVOIR DEPTH SHALL BE A MINIMUM OF 12 INCHES.
4. BASE AND / OR SUBBASE COURSES WITH MINIMUM POROSITY OF 30% CAN BE CONSIDERED AGGREGATE STORAGE RESERVOIR. BASE COURSE FOR PERMEABLE INTERLOCKING PAVERS SHALL BE 4" IN DEPTH OF ASTM C-33, 57 AGGREGATE AND CAN BE CONSIDERED PART OF THE AGGREGATE STORAGE DEPTH.
5. UNDERDRAINS CAN BE LOCATED WITHIN OR BELOW THE AGGREGATE STORAGE RESERVOIR. UNDERDRAINS (OR EQUIVALENT) ARE REQUIRED IF THE AGGREGATE STORAGE RESERVOIR DRAIN DRAW DOWN TIME WILL EXCEED 72 HOURS.

10 / C 504 — PAVEMENT TYPE DETAILS
NOT TO SCALE

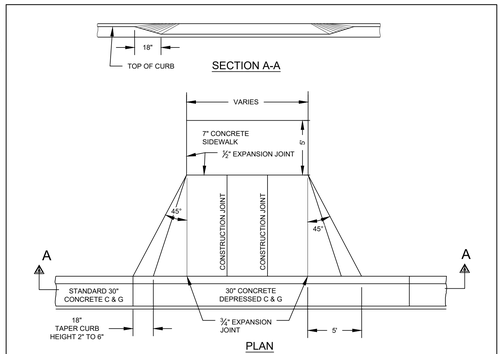

3 / C 504 — STANDARD DRIVEWAY DETAIL
NOT TO SCALE

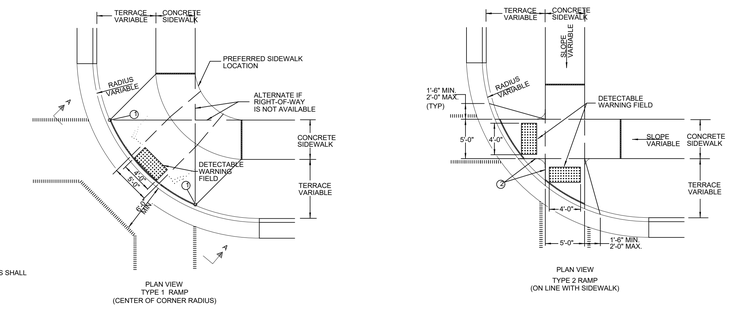

LEGEND

- 1" EXPANSION JOINT-SIDEWALK
- CONTRACTION JOINT FIELD LOCATED
- PAVEMENT MARKING, WHITE, 6-INCH
- ALTERNATIVE LAYOUT

① THIS POINT IS AN EXTENSION OF OUTSIDE EDGE OF APPROACHING SIDEWALK WHERE IT MEETS THE BACK OF CONCRETE CURB.

② WHEN THIS DISTANCE IS LESS THAN 6'-0" IT MAY BE DIFFICULT TO ACHIEVE A 12H:1V SLOPE, OR FLATTER, ON THE RAMP. REDUCE CURB HEIGHT IN TRIANGLE AREA TO ACHIEVE 12H:1V SLOPE, OR FLATTER, ON RAMP. 2" MINIMUM CURB HEIGHT.

NOTE:
MATERIALS AND METHOD OF CONSTRUCTION FOR TRUNCATED DOMES SHALL BE SPECIFIED IN SPECIAL PROVISIONS OR AS REQUIRED BY THE CITY ENGINEER

GENERAL NOTES

TYPE 2-A RAMPS SHALL BE USED IN NEW DEVELOPMENTS UNLESS OTHERWISE APPROVED BY THE CITY ENGINEER.

DETAILS OF CONSTRUCTION, MATERIALS AND WORKMANSHIP NOT SHOWN ON THIS DRAWING SHALL CONFORM TO THE PERTINENT REQUIREMENTS OF THE STANDARD SPECIFICATIONS AND THE APPLICABLE SPECIAL PROVISIONS.

RAMPS SHALL BE BUILT AT 12H:1V OR FLATTER. WHEN NECESSARY, THE SIDEWALK ELEVATION MAY BE LOWERED TO MEET THE HIGH POINT ON THE RAMP.

DETECTABLE WARNING FIELD SHALL BE MEASURED AND PAID BY THE SQUARE FOOT AS "CURB RAMP DETECTABLE WARNING FIELD".

CURB RAMP DETECTABLE WARNING FIELD MATERIALS AND DEVICES SHALL BE APPROVED BY THE CITY ENGINEER. THE COLOR OF THE DETECTABLE WARNING FIELD SHALL BE SAFETY YELLOW OR APPROVED EQUAL AND IS INCIDENTAL TO THE BID ITEM OF "CURB RAMP DETECTABLE WARNING FIELD".

SURFACE TEXTURE OF THE RAMP SHALL BE OBTAINED BY COARSE BROOMING TRANSVERSE TO THE SLOPE OF THE RAMP.

DETECTABLE WARNING SURFACE SHALL BE LOCATED SO THAT THE EDGE NEAREST THE CURB LINE IS 6 INCHES MINIMUM AND 8 INCHES MAXIMUM FROM THE CURB LINE.

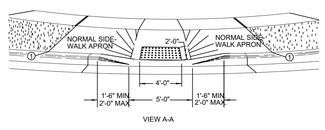

9 / C 504 — SIDEWALK RAMP DETAILS
NOT TO SCALE

eppstein uhen : architects
milwaukee 333 East Chicago Street Milwaukee, Wisconsin 53202 telephone 414.271.5350
madison 309 West Johnson Street, Suite 202 Madison, Wisconsin 53703 telephone 608.442.5350

WS DEVELOPMENT
33 BOYLSTON ST., STE 3000
CHESTNUT HILL, MA 02467
P 617.232.8900

SNYDER & ASSOCIATES
5010 VOGES ROAD
MADISON, WISCONSIN 53718
608-838-0444

PROJECT INFORMATION

HILLDALE SHOPPING CENTER

HILLDALE

702 N Midvale Blvd
Madison, WI 53705

ISSUANCE AND REVISIONS

#	DATE	DESCRIPTION
	3/13/2023	CITY SUBMITTAL

KEY PLAN

SHEET INFORMATION

PROJECT MANAGER	SJA
PROJECT NUMBER	120.0311.30

SITE DETAILS

C 504

© Eppstein Uhen Architects, Inc.

V:\Projects\2020\120.0311.30\CAD\120.0311.30 PSD.dwg ALEXANDER KEEFE, SITE DETAILS, 2023/03/10, 2:49 PM, ARCH I FULL BLEED E1 (30.00 X 42.00 INCHES)

PROJECT INFORMATION	
ENGINEERED PRODUCT MANAGER	
ADS SALES REP	
PROJECT NO.	

Advanced Drainage Systems, Inc.

SiteAssist™
FOR STORMTECH
INSTALLATION INSTRUCTIONS
VISIT OUR APP

BUILDING 300

MADISON, WI

SC-740 STORMTECH CHAMBER SPECIFICATIONS

1. CHAMBERS SHALL BE STORMTECH SC-740.
2. CHAMBERS SHALL BE ARCH-SHAPED AND SHALL BE MANUFACTURED FROM VIRGIN, IMPACT-MODIFIED POLYPROPYLENE COPOLYMERS.
3. CHAMBERS SHALL MEET THE REQUIREMENTS OF ASTM F2418, "STANDARD SPECIFICATION FOR POLYPROPYLENE (PP) CORRUGATED WALL STORMWATER COLLECTION CHAMBERS".
4. CHAMBER ROWS SHALL PROVIDE CONTINUOUS, UNOBSTRUCTED INTERNAL SPACE WITH NO INTERNAL SUPPORTS THAT WOULD IMPEDE FLOW OR LIMIT ACCESS FOR INSPECTION.
5. THE STRUCTURAL DESIGN OF THE CHAMBERS, THE STRUCTURAL BACKFILL, AND THE INSTALLATION REQUIREMENTS SHALL ENSURE THAT THE LOAD FACTORS SPECIFIED IN THE AASHTO LRFD BRIDGE DESIGN SPECIFICATIONS, SECTION 12.12, ARE MET FOR: 1) LONG-DURATION DEAD LOADS AND 2) SHORT-DURATION LIVE LOADS, BASED ON THE AASHTO DESIGN TRUCK WITH CONSIDERATION FOR IMPACT AND MULTIPLE VEHICLE PRESENCES.
6. CHAMBERS SHALL BE DESIGNED, TESTED AND ALLOWABLE LOAD CONFIGURATIONS DETERMINED IN ACCORDANCE WITH ASTM F2787, "STANDARD PRACTICE FOR STRUCTURAL DESIGN OF THERMOPLASTIC CORRUGATED WALL STORMWATER COLLECTION CHAMBERS". LOAD CONFIGURATIONS SHALL INCLUDE: 1) INSTANTANEOUS (<1 MIN) AASHTO DESIGN TRUCK LIVE LOAD ON MINIMUM COVER 2) MAXIMUM PERMANENT (75-YR) COVER LOAD AND 3) ALLOWABLE COVER WITH PARKED (1-WEEK) AASHTO DESIGN TRUCK.
7. REQUIREMENTS FOR HANDLING AND INSTALLATION:
   - TO MAINTAIN THE WIDTH OF CHAMBERS DURING SHIPPING AND HANDLING, CHAMBERS SHALL HAVE INTEGRAL, INTERLOCKING STACKING LUGS.
   - TO ENSURE A SECURE JOINT DURING INSTALLATION AND BACKFILL, THE HEIGHT OF THE CHAMBER JOINT SHALL NOT BE LESS THAN 2".
   - TO ENSURE THE INTEGRITY OF THE ARCH SHAPE DURING INSTALLATION, a) THE ARCH STIFFNESS CONSTANT SHALL BE GREATER THAN OR EQUAL TO 550 LBS/FT/%. THE ASC IS DEFINED IN SECTION 6.2.8 OF ASTM F2418. AND b) TO RESIST CHAMBER DEFORMATION DURING INSTALLATION AT ELEVATED TEMPERATURES (ABOVE 73° F / 23° C), CHAMBERS SHALL BE PRODUCED FROM REFLECTIVE GOLD OR YELLOW COLORS.
8. ONLY CHAMBERS THAT ARE APPROVED BY THE SITE DESIGN ENGINEER WILL BE ALLOWED. UPON REQUEST BY THE SITE DESIGN ENGINEER OR OWNER, THE CHAMBER MANUFACTURER SHALL SUBMIT A STRUCTURAL EVALUATION FOR APPROVAL BEFORE DELIVERING CHAMBERS TO THE PROJECT SITE AS FOLLOWS:
   - THE STRUCTURAL EVALUATION SHALL BE SEALED BY A REGISTERED PROFESSIONAL ENGINEER.
   - THE STRUCTURAL EVALUATION SHALL DEMONSTRATE THAT THE SAFETY FACTORS ARE GREATER THAN OR EQUAL TO 1.95 FOR DEAD LOAD AND 1.75 FOR LIVE LOAD, THE MINIMUM REQUIRED BY ASTM F2787 AND BY SECTIONS 3 AND 12.12 OF THE AASHTO LRFD BRIDGE DESIGN SPECIFICATIONS FOR THERMOPLASTIC PIPE.
   - THE TEST DERIVED CREEP MODULUS AS SPECIFIED IN ASTM F2418 SHALL BE USED FOR PERMANENT DEAD LOAD DESIGN EXCEPT THAT IT SHALL BE THE 75-YEAR MODULUS USED FOR DESIGN.
9. CHAMBERS AND END CAPS SHALL BE PRODUCED AT AN ISO 9001 CERTIFIED MANUFACTURING FACILITY.

IMPORTANT - NOTES FOR THE BIDDING AND INSTALLATION OF THE SC-740 SYSTEM

1. STORMTECH SC-740 CHAMBERS SHALL NOT BE INSTALLED UNTIL THE MANUFACTURER'S REPRESENTATIVE HAS COMPLETED A PRE-CONSTRUCTION MEETING WITH THE INSTALLERS.
2. STORMTECH SC-740 CHAMBERS SHALL BE INSTALLED IN ACCORDANCE WITH THE "STORMTECH SC-310/SC-740/DC-780 CONSTRUCTION GUIDE".
3. CHAMBERS ARE NOT TO BE BACKFILLED WITH A DOZER OR AN EXCAVATOR SITUATED OVER THE CHAMBERS. STORMTECH RECOMMENDS 3 BACKFILL METHODS:
   - STONESHOOTER LOCATED OFF THE CHAMBER BED.
   - BACKFILL AS ROWS ARE BUILT USING AN EXCAVATOR ON THE FOUNDATION STONE OR SUBGRADE.
   - BACKFILL FROM OUTSIDE THE EXCAVATION USING A LONG BOOM HOE OR EXCAVATOR.
4. THE FOUNDATION STONE SHALL BE LEVELED AND COMPACTED PRIOR TO PLACING CHAMBERS.
5. JOINTS BETWEEN CHAMBERS SHALL BE PROPERLY SEATED PRIOR TO PLACING STONE.
6. MAINTAIN MINIMUM - 6" (150 mm) SPACING BETWEEN THE CHAMBER ROWS.
7. EMBEDMENT STONE SURROUNDING CHAMBERS MUST BE A CLEAN, CRUSHED, ANGULAR STONE 3/4-2" (20-50 mm).
8. THE CONTRACTOR MUST REPORT ANY DISCREPANCIES WITH CHAMBER FOUNDATION MATERIALS BEARING CAPACITIES TO THE SITE DESIGN ENGINEER.
9. ADS RECOMMENDS THE USE OF "FLEXSTORM CATCH IT" INSERTS DURING CONSTRUCTION FOR ALL INLETS TO PROTECT THE SUBSURFACE STORMWATER MANAGEMENT SYSTEM FROM CONSTRUCTION SITE RUNOFF.

NOTES FOR CONSTRUCTION EQUIPMENT

1. STORMTECH SC-740 CHAMBERS SHALL BE INSTALLED IN ACCORDANCE WITH THE "STORMTECH SC-310/SC-740/DC-780 CONSTRUCTION GUIDE".
2. THE USE OF CONSTRUCTION EQUIPMENT OVER SC-740 CHAMBERS IS LIMITED:
   - NO EQUIPMENT IS ALLOWED ON BARE CHAMBERS.
   - NO RUBBER TIRED LOADERS, DUMP TRUCKS, OR EXCAVATORS ARE ALLOWED UNTIL PROPER FILL DEPTHS ARE REACHED IN ACCORDANCE WITH THE "STORMTECH SC-310/SC-740/DC-780 CONSTRUCTION GUIDE".
   - WEIGHT LIMITS FOR CONSTRUCTION EQUIPMENT CAN BE FOUND IN THE "STORMTECH SC-310/SC-740/DC-780 CONSTRUCTION GUIDE".
3. FULL 36" (900 mm) OF STABILIZED COVER MATERIALS OVER THE CHAMBERS IS REQUIRED FOR DUMP TRUCK TRAVEL OR DUMPING.

USE OF A DOZER TO PUSH EMBEDMENT STONE BETWEEN THE ROWS OF CHAMBERS MAY CAUSE DAMAGE TO THE CHAMBERS AND IS NOT AN ACCEPTABLE BACKFILL METHOD. ANY CHAMBERS DAMAGED BY THE "DUMP AND PUSH" METHOD ARE NOT COVERED UNDER THE STORMTECH STANDARD WARRANTY.

CONTACT STORMTECH AT 1-888-892-2694 WITH ANY QUESTIONS ON INSTALLATION REQUIREMENTS OR WEIGHT LIMITS FOR CONSTRUCTION EQUIPMENT.

©2022 ADS, INC.

PROPOSED LAYOUT		PROPOSED ELEVATIONS	
60	STORMTECH SC-740 CHAMBERS	MAXIMUM ALLOWABLE GRADE (TOP OF PAVEMENT/UNPAVED):	904.70
10	STORMTECH SC-740 END CAPS	MINIMUM ALLOWABLE GRADE (UNPAVED WITH TRAFFIC):	898.70
12	STONE ABOVE (in)	MINIMUM ALLOWABLE GRADE (UNPAVED NO TRAFFIC):	898.20
12	STONE BELOW (in)	MINIMUM ALLOWABLE GRADE (TOP OF RIGID CONCRETE PAVEMENT):	898.20
40	STONE VOID	MINIMUM ALLOWABLE GRADE (BASE OF FLEXIBLE PAVEMENT):	898.20
5927	INSTALLED SYSTEM VOLUME (CF) (PERIMETER STONE INCLUDED) (COVER STONE INCLUDED) (BASE STONE INCLUDED)	TOP OF STONE:	897.70
		TOP OF SC-740 CHAMBER:	896.70
		12" x 12" TOP MANIFOLD INVERT:	895.24
		12" BOTTOM CONNECTION INVERT:	894.30
2374	SYSTEM AREA (SF)	24" ISOLATOR ROW PLUS INVERT:	894.21
237.6	SYSTEM PERIMETER (ft)	BOTTOM OF SC-740 CHAMBER:	894.20
		UNDERDRAIN INVERT:	893.20
		BOTTOM OF STONE:	893.20

*INVERT ABOVE BASE OF CHAMBER

PART TYPE	ITEM ON LAYOUT	DESCRIPTION	INVERT*	MAX FLOW
PREFABRICATED EZ END CAP	A	24" BOTTOM PREFABRICATED EZ END CAP, PART#: SC740ECEZ / TYP OF ALL 24" BOTTOM CONNECTIONS AND ISOLATOR PLUS ROWS	0.10"	
FLAMP	B	INSTALL FLAMP ON 24" ACCESS PIPE / PART#: SC74024RAMP		
MANIFOLD	C	12" x 12" TOP MANIFOLD, ADS N-12	12.50"	
NYLOPLAST (INLET W/ ISO PLUS ROW)	D	30" DIAMETER (24.00" SUMP MIN)		5.7 CFS IN
NYLOPLAST (OUTLET)	E	30" DIAMETER (DESIGN BY ENGINEER)		2.0 CFS OUT
UNDERDRAIN	F	6" ADS N-12 DUAL WALL PERFORATED HDPE UNDERDRAIN		

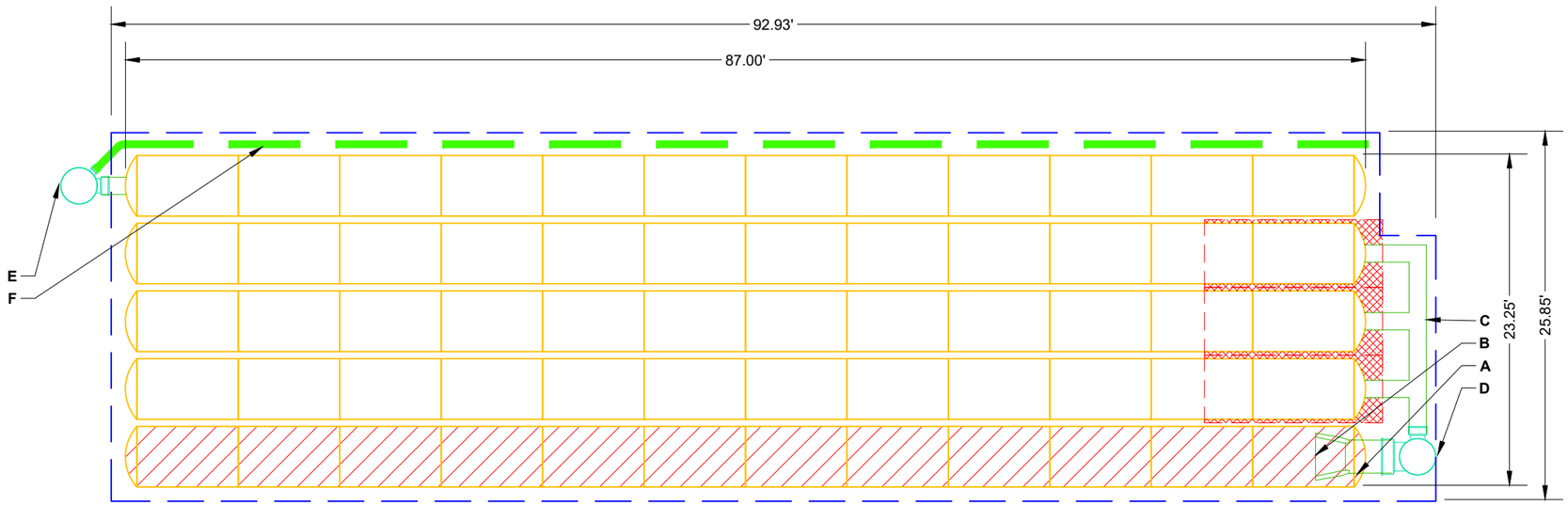

ISOLATOR ROW PLUS
(SEE DETAIL)

PLACE MINIMUM 12.50' OF ADSPLUS125 WOVEN GEOTEXTILE OVER BEDDING STONE AND UNDERNEATH CHAMBER FEET FOR SCOUR PROTECTION AT ALL CHAMBER INLET ROWS

BED LIMITS

NOTES

- MANIFOLD SIZE TO BE DETERMINED BY SITE DESIGN ENGINEER. SEE TECH NOTE #6.32 FOR MANIFOLD SIZING GUIDANCE.
- DUE TO THE ADAPTATION OF THIS CHAMBER SYSTEM TO SPECIFIC SITE AND DESIGN CONSTRAINTS, IT MAY BE NECESSARY TO CUT AND COUPLE ADDITIONAL PIPE TO STANDARD MANIFOLD COMPONENTS IN THE FIELD.
- THE SITE DESIGN ENGINEER MUST REVIEW ELEVATIONS AND IF NECESSARY ADJUST GRADING TO ENSURE THE CHAMBER COVER REQUIREMENTS ARE MET.
- THIS CHAMBER SYSTEM WAS DESIGNED WITHOUT SITE-SPECIFIC INFORMATION ON SOIL CONDITIONS OR BEARING CAPACITY. THE SITE DESIGN ENGINEER IS RESPONSIBLE FOR DETERMINING THE SUITABILITY OF THE SOIL AND PROVIDING THE BEARING CAPACITY OF THE INSITU SOILS. THE BASE STONE DEPTH MAY BE INCREASED OR DECREASED ONCE THIS INFORMATION IS PROVIDED.
- **NOT FOR CONSTRUCTION:** THIS LAYOUT IS FOR DIMENSIONAL PURPOSES ONLY TO PROVE CONCEPT & THE REQUIRED STORAGE VOLUME CAN BE ACHIEVED ON SITE.

BUILDING 300
MADISON, WI
DATE:
DRAWN: LO
PROJECT #:
CHECKED: N/A

DATE	DRW	CHK	DESCRIPTION

THIS DRAWING HAS BEEN PREPARED BASED ON INFORMATION PROVIDED TO ADS UNDER THE DIRECTION OF THE SITE DESIGN ENGINEER OR OTHER PROJECT REPRESENTATIVE. THE SITE DESIGN ENGINEER SHALL REVIEW THIS DRAWING PRIOR TO CONSTRUCTION. IT IS THE ULTIMATE RESPONSIBILITY OF THE SITE DESIGN ENGINEER TO ENSURE THAT THE PRODUCT(S) DEPICTED AND ALL ASSOCIATED DETAILS MEET ALL APPLICABLE LAWS, REGULATIONS, AND PROJECT REQUIREMENTS.

ADS
4640 TRUEMAN BLVD
HILLIARD, OH 43026
1-800-733-7473

0 10' 20'

StormTech®
Chamber System
888-892-2694 | WWW.STORMTECH.COM

ACCEPTABLE FILL MATERIALS: STORMTECH SC-740 CHAMBER SYSTEMS

MATERIAL LOCATION		DESCRIPTION	AASHTO MATERIAL CLASSIFICATIONS	COMPACTION / DENSITY REQUIREMENT
D	**FINAL FILL:** FILL MATERIAL FOR LAYER 'D' STARTS FROM THE TOP OF THE 'C' LAYER TO THE BOTTOM OF FLEXIBLE PAVEMENT OR UNPAVED FINISHED GRADE ABOVE. NOTE THAT PAVEMENT SUBBASE MAY BE PART OF THE 'D' LAYER.	ANY SOIL/ROCK MATERIALS, NATIVE SOILS, OR PER ENGINEER'S PLANS. CHECK PLANS FOR PAVEMENT SUBGRADE REQUIREMENTS.	N/A	PREPARE PER SITE DESIGN ENGINEER'S PLANS. PAVED INSTALLATIONS MAY HAVE STRINGENT MATERIAL AND PREPARATION REQUIREMENTS.
C	**INITIAL FILL:** FILL MATERIAL FOR LAYER 'C' STARTS FROM THE TOP OF THE EMBEDMENT STONE ('B' LAYER) TO 18" (450 mm) ABOVE THE TOP OF THE CHAMBER. NOTE THAT PAVEMENT SUBBASE MAY BE A PART OF THE 'C' LAYER.	GRANULAR WELL-GRADED SOIL/AGGREGATE MIXTURES, <35% FINES OR PROCESSED AGGREGATE. MOST PAVEMENT SUBBASE MATERIALS CAN BE USED IN LIEU OF THIS LAYER.	AASHTO M145[1] A-1, A-2-4, A-3 OR AASHTO M43[1] 3, 357, 4, 467, 5, 56, 57, 6, 67, 68, 7, 78, 8, 89, 9, 10	BEGIN COMPACTIONS AFTER 12" (300 mm) OF MATERIAL OVER THE CHAMBERS IS REACHED. COMPACT ADDITIONAL LAYERS IN 6" (150 mm) MAX LIFTS TO A MIN. 95% PROCTOR DENSITY FOR WELL GRADED MATERIAL AND 95% RELATIVE DENSITY FOR PROCESSED AGGREGATE MATERIALS. ROLLER GROSS VEHICLE WEIGHT NOT TO EXCEED 12,000 lbs (53 kN). DYNAMIC FORCE NOT TO EXCEED 20,000 lbs (89 kN).
B	**EMBEDMENT STONE:** FILL SURROUNDING THE CHAMBERS FROM THE FOUNDATION STONE ('A' LAYER) TO THE 'C' LAYER ABOVE.	CLEAN, CRUSHED, ANGULAR STONE	AASHTO M43[1] 3, 357, 4, 467, 5, 56, 57	NO COMPACTION REQUIRED.
A	**FOUNDATION STONE:** FILL BELOW CHAMBERS FROM THE SUBGRADE UP TO THE FOOT (BOTTOM) OF THE CHAMBER.	CLEAN, CRUSHED, ANGULAR STONE	AASHTO M43[1] 3, 357, 4, 467, 5, 56, 57	PLATE COMPACT OR ROLL TO ACHIEVE A FLAT SURFACE.[2,3]

PLEASE NOTE:
1. THE LISTED AASHTO DESIGNATIONS ARE FOR GRADATIONS ONLY. THE STONE MUST ALSO BE CLEAN, CRUSHED, ANGULAR. FOR EXAMPLE, A SPECIFICATION FOR #4 STONE WOULD STATE: "CLEAN, CRUSHED, ANGULAR NO. 4 (AASHTO M43) STONE".
2. STORMTECH COMPACTION REQUIREMENTS ARE MET FOR 'A' LOCATION MATERIALS WHEN PLACED AND COMPACTED IN 6" (150 mm) (MAX) LIFTS USING TWO FULL COVERAGES WITH A VIBRATORY COMPACTOR.
3. WHERE INFILTRATION SURFACES MAY BE COMPROMISED BY COMPACTION, FOR STANDARD DESIGN LOAD CONDITIONS, A FLAT SURFACE MAY BE ACHIEVED BY RAKING OR DRAGGING WITHOUT COMPACTION EQUIPMENT. FOR SPECIAL LOAD DESIGNS, CONTACT STORMTECH FOR COMPACTION REQUIREMENTS.
4. ONCE LAYER 'C' IS PLACED, ANY SOIL/MATERIAL CAN BE PLACED IN LAYER 'D' UP TO THE FINISHED GRADE. MOST PAVEMENT SUBBASE SOILS CAN BE USED TO REPLACE THE MATERIAL REQUIREMENTS OF LAYER 'C' OR 'D' AT THE SITE DESIGN ENGINEER'S DISCRETION.

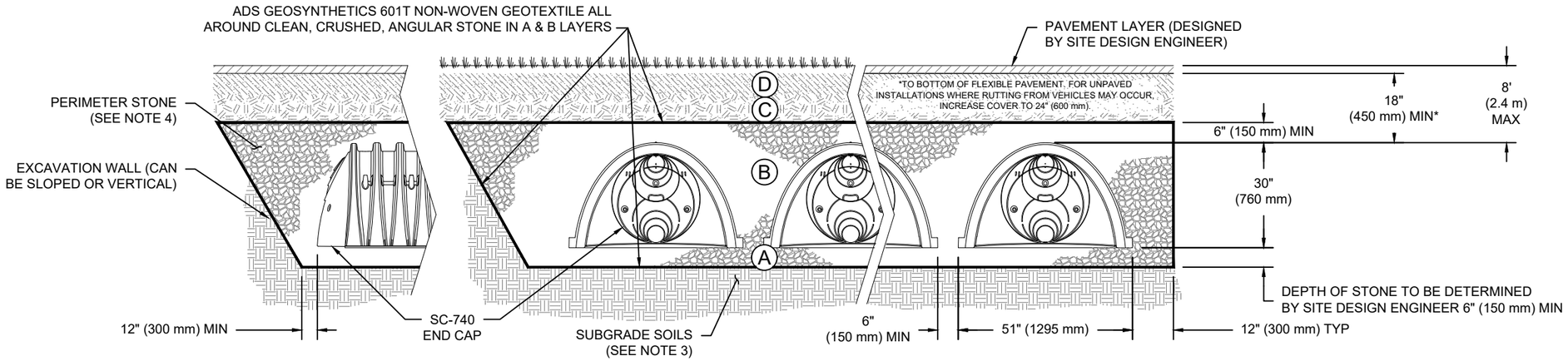

NOTES:

1. CHAMBERS SHALL MEET THE REQUIREMENTS OF ASTM F2418, "STANDARD SPECIFICATION FOR POLYPROPYLENE (PP) CORRUGATED WALL STORMWATER COLLECTION CHAMBERS".
2. SC-740 CHAMBERS SHALL BE DESIGNED IN ACCORDANCE WITH ASTM F2787 "STANDARD PRACTICE FOR STRUCTURAL DESIGN OF THERMOPLASTIC CORRUGATED WALL STORMWATER COLLECTION CHAMBERS".
3. THE SITE DESIGN ENGINEER IS RESPONSIBLE FOR ASSESSING THE BEARING RESISTANCE (ALLOWABLE BEARING CAPACITY) OF THE SUBGRADE SOILS AND THE DEPTH OF FOUNDATION STONE WITH CONSIDERATION FOR THE RANGE OF EXPECTED SOIL MOISTURE CONDITIONS.
4. PERIMETER STONE MUST BE EXTENDED HORIZONTALLY TO THE EXCAVATION WALL FOR BOTH VERTICAL AND SLOPED EXCAVATION WALLS.
5. REQUIREMENTS FOR HANDLING AND INSTALLATION:
   - TO MAINTAIN THE WIDTH OF CHAMBERS DURING SHIPPING AND HANDLING, CHAMBERS SHALL HAVE INTEGRAL, INTERLOCKING STACKING LUGS.
   - TO ENSURE A SECURE JOINT DURING INSTALLATION AND BACKFILL, THE HEIGHT OF THE CHAMBER JOINT SHALL NOT BE LESS THAN 2".
   - TO ENSURE THE INTEGRITY OF THE ARCH SHAPE DURING INSTALLATION, a) THE ARCH STIFFNESS CONSTANT SHALL BE GREATER THAN OR EQUAL TO 550 LBS/FT/%. THE ASC IS DEFINED IN SECTION 6.2.8 OF ASTM F2418. AND b) TO RESIST CHAMBER DEFORMATION DURING INSTALLATION AT ELEVATED TEMPERATURES (ABOVE 73° F / 23° C), CHAMBERS SHALL BE PRODUCED FROM REFLECTIVE GOLD OR YELLOW COLORS.

BUILDING 300
MADISON, WI
DRAWN: LO
CHECKED: N/A
DATE:
PROJECT #:

DATE	DRW	CHK	DESCRIPTION

StormTech® Chamber System
888-892-2694 | WWW.STORMTECH.COM

4640 TRUEMAN BLVD
HILLIARD, OH 43026
1-800-733-7473

THIS DRAWING HAS BEEN PREPARED BASED ON INFORMATION PROVIDED TO ADS UNDER THE DIRECTION OF THE SITE DESIGN ENGINEER OR OTHER PROJECT REPRESENTATIVE. THE SITE DESIGN ENGINEER SHALL REVIEW THIS DRAWING PRIOR TO CONSTRUCTION. IT IS THE ULTIMATE RESPONSIBILITY OF THE SITE DESIGN ENGINEER TO ENSURE THAT THE PRODUCT(S) DEPICTED AND ALL ASSOCIATED DETAILS MEET ALL APPLICABLE LAWS, REGULATIONS, AND PROJECT REQUIREMENTS.

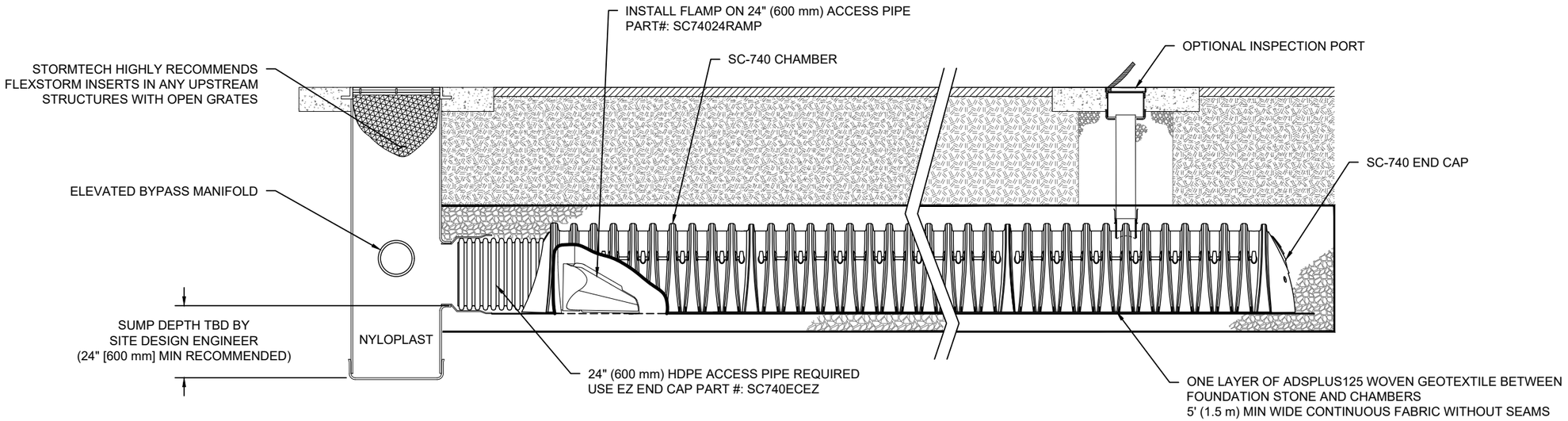

SC-740 ISOLATOR ROW PLUS DETAIL
NTS

INSPECTION & MAINTENANCE

STEP 1) INSPECT ISOLATOR ROW PLUS FOR SEDIMENT
- A. INSPECTION PORTS (IF PRESENT)
  - A.1. REMOVE/OPEN LID ON NYLOPLAST INLINE DRAIN
  - A.2. REMOVE AND CLEAN FLEXSTORM FILTER IF INSTALLED
  - A.3. USING A FLASHLIGHT AND STADIA ROD, MEASURE DEPTH OF SEDIMENT AND RECORD ON MAINTENANCE LOG
  - A.4. LOWER A CAMERA INTO ISOLATOR ROW PLUS FOR VISUAL INSPECTION OF SEDIMENT LEVELS (OPTIONAL)
  - A.5. IF SEDIMENT IS AT, OR ABOVE, 3" (80 mm) PROCEED TO STEP 2. IF NOT, PROCEED TO STEP 3.
- B. ALL ISOLATOR PLUS ROWS
  - B.1. REMOVE COVER FROM STRUCTURE AT UPSTREAM END OF ISOLATOR ROW PLUS
  - B.2. USING A FLASHLIGHT, INSPECT DOWN THE ISOLATOR ROW PLUS THROUGH OUTLET PIPE
    - i) MIRRORS ON POLES OR CAMERAS MAY BE USED TO AVOID A CONFINED SPACE ENTRY
    - ii) FOLLOW OSHA REGULATIONS FOR CONFINED SPACE ENTRY IF ENTERING MANHOLE
  - B.3. IF SEDIMENT IS AT, OR ABOVE, 3" (80 mm) PROCEED TO STEP 2. IF NOT, PROCEED TO STEP 3.

STEP 2) CLEAN OUT ISOLATOR ROW PLUS USING THE JETVAC PROCESS
- A. A FIXED CULVERT CLEANING NOZZLE WITH REAR FACING SPREAD OF 45" (1.1 m) OR MORE IS PREFERRED
- B. APPLY MULTIPLE PASSES OF JETVAC UNTIL BACKFLUSH WATER IS CLEAN
- C. VACUUM STRUCTURE SUMP AS REQUIRED

STEP 3) REPLACE ALL COVERS, GRATES, FILTERS, AND LIDS; RECORD OBSERVATIONS AND ACTIONS.

STEP 4) INSPECT AND CLEAN BASINS AND MANHOLES UPSTREAM OF THE STORMTECH SYSTEM.

NOTES

1. INSPECT EVERY 6 MONTHS DURING THE FIRST YEAR OF OPERATION. ADJUST THE INSPECTION INTERVAL BASED ON PREVIOUS OBSERVATIONS OF SEDIMENT ACCUMULATION AND HIGH WATER ELEVATIONS.

2. CONDUCT JETTING AND VACTORING ANNUALLY OR WHEN INSPECTION SHOWS THAT MAINTENANCE IS NECESSARY.

BUILDING 300
MADISON, WI
DATE:
DRAWN: LO
PROJECT #:
CHECKED: N/A

DATE	DRW	CHK	DESCRIPTION

StormTech®
Chamber System
888-892-2694 | WWW.STORMTECH.COM

ADS
4640 TRUEMAN BLVD
HILLIARD, OH 43026
1-800-733-7473

THIS DRAWING HAS BEEN PREPARED BASED ON INFORMATION PROVIDED TO ADS UNDER THE DIRECTION OF THE SITE DESIGN ENGINEER OR OTHER PROJECT REPRESENTATIVE. THE SITE DESIGN ENGINEER SHALL REVIEW THIS DRAWING PRIOR TO CONSTRUCTION. IT IS THE ULTIMATE RESPONSIBILITY OF THE SITE DESIGN ENGINEER TO ENSURE THAT THE PRODUCT(S) DEPICTED AND ALL ASSOCIATED DETAILS MEET ALL APPLICABLE LAWS, REGULATIONS, AND PROJECT REQUIREMENTS.

UNDERDRAIN DETAIL

NTS

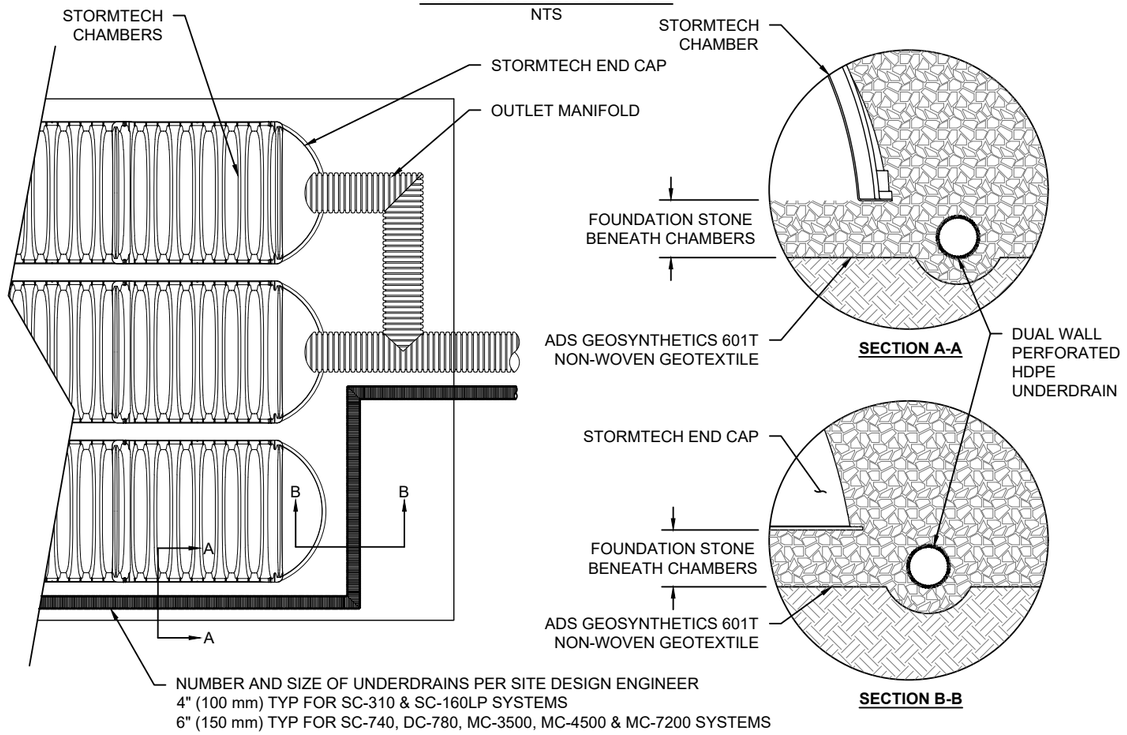

SC-740 TECHNICAL SPECIFICATION

NTS

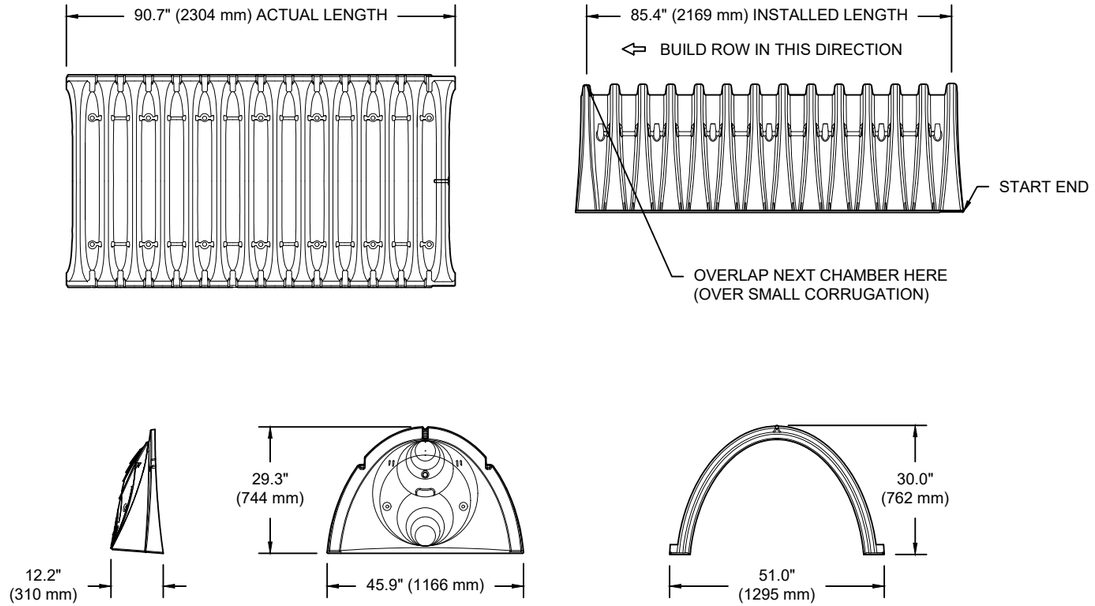

NOMINAL CHAMBER SPECIFICATIONS

SIZE (W X H X INSTALLED LENGTH)	51.0" X 30.0" X 85.4"	(1295 mm X 762 mm X 2169 mm)
CHAMBER STORAGE	45.9 CUBIC FEET	(1.30 m³)
MINIMUM INSTALLED STORAGE*	74.9 CUBIC FEET	(2.12 m³)
WEIGHT	75.0 lbs.	(33.6 kg)

*ASSUMES 6" (152 mm) STONE ABOVE, BELOW, AND BETWEEN CHAMBERS

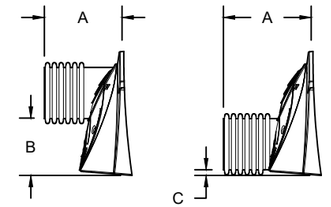

PRE-FAB STUB AT BOTTOM OF END CAP WITH FLAMP END WITH "BR"
PRE-FAB STUBS AT BOTTOM OF END CAP FOR PART NUMBERS ENDING WITH "B"
PRE-FAB STUBS AT TOP OF END CAP FOR PART NUMBERS ENDING WITH "T"
PRE-CORED END CAPS END WITH "PC"

PART #	STUB	A	B	C
SC740EPE06T / SC740EPE06TPC	6" (150 mm)	10.9" (277 mm)	18.5" (470 mm)	---
SC740EPE06B / SC740EPE06BPC			---	0.5" (13 mm)
SC740EPE08T /SC740EPE08TPC	8" (200 mm)	12.2" (310 mm)	16.5" (419 mm)	---
SC740EPE08B / SC740EPE08BPC			---	0.6" (15 mm)
SC740EPE10T / SC740EPE10TPC	10" (250 mm)	13.4" (340 mm)	14.5" (368 mm)	---
SC740EPE10B / SC740EPE10BPC			---	0.7" (18 mm)
SC740EPE12T / SC740EPE12TPC	12" (300 mm)	14.7" (373 mm)	12.5" (318 mm)	---
SC740EPE12B / SC740EPE12BPC			---	1.2" (30 mm)
SC740EPE15T / SC740EPE15TPC	15" (375 mm)	18.4" (467 mm)	9.0" (229 mm)	---
SC740EPE15B / SC740EPE15BPC			---	1.3" (33 mm)
SC740EPE18T / SC740EPE18TPC	18" (450 mm)	19.7" (500 mm)	5.0" (127 mm)	---
SC740EPE18B / SC740EPE18BPC			---	1.6" (41 mm)
SC740ECEZ*	24" (600 mm)	18.5" (470 mm)	---	0.1" (3 mm)

ALL STUBS, EXCEPT FOR THE SC740ECEZ ARE PLACED AT BOTTOM OF END CAP SUCH THAT THE OUTSIDE DIAMETER OF THE STUB IS FLUSH WITH THE BOTTOM OF THE END CAP. FOR ADDITIONAL INFORMATION CONTACT STORMTECH AT 1-888-892-2694.

* FOR THE SC740ECEZ THE 24" (600 mm) STUB LIES BELOW THE BOTTOM OF THE END CAP APPROXIMATELY 1.75" (44 mm). BACKFILL MATERIAL SHOULD BE REMOVED FROM BELOW THE N-12 STUB SO THAT THE FITTING SITS LEVEL.

NOTE: ALL DIMENSIONS ARE NOMINAL

BUILDING 300
MADISON, WI
DATE:
DRAWN: LO
PROJECT #:
CHECKED: N/A

DESCRIPTION	CHK	DRW	DATE

THIS DRAWING HAS BEEN PREPARED BASED ON INFORMATION PROVIDED TO ADS UNDER THE DIRECTION OF THE SITE DESIGN ENGINEER SHALL REVIEW THIS DRAWING PRIOR TO CONSTRUCTION. IT IS THE ULTIMATE RESPONSIBILITY OF THE SITE DESIGN ENGINEER TO ENSURE THAT THE PRODUCT(S) DEPICTED AND ALL ASSOCIATED DETAILS MEET ALL APPLICABLE LAWS, REGULATIONS, AND PROJECT REQUIREMENTS.

StormTech®
Chamber System
888-892-2694 | WWW.STORMTECH.COM

4640 TRUEMAN BLVD
HILLIARD, OH 43026
1-800-733-7473

NYLOPLAST DRAIN BASIN

NTS

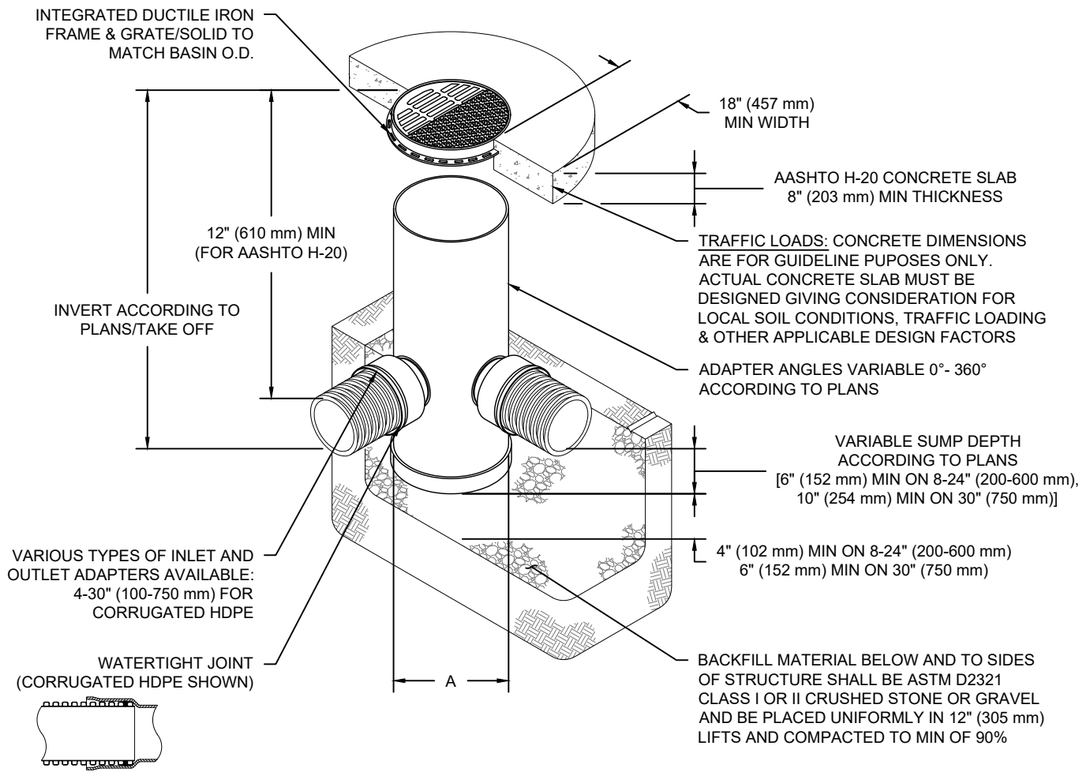

NOTES

1. 8-30" (200-750 mm) GRATES/SOLID COVERS SHALL BE DUCTILE IRON PER ASTM A536 GRADE 70-50-05
2. 12-30" (300-750 mm) FRAMES SHALL BE DUCTILE IRON PER ASTM A536 GRADE 70-50-05
3. DRAIN BASIN TO BE CUSTOM MANUFACTURED ACCORDING TO PLAN DETAILS
4. DRAINAGE CONNECTION STUB JOINT TIGHTNESS SHALL CONFORM TO ASTM D3212 FOR CORRUGATED HDPE (ADS & HANCOR DUAL WALL) & SDR 35 PVC
5. FOR COMPLETE DESIGN AND PRODUCT INFORMATION: **WWW.NYLOPLAST-US.COM**
6. TO ORDER CALL: **800-821-6710**

A	PART #	GRATE/SOLID COVER OPTIONS		
8" (200 mm)	2808AG	PEDESTRIAN LIGHT DUTY	STANDARD LIGHT DUTY	SOLID LIGHT DUTY
10" (250 mm)	2810AG	PEDESTRIAN LIGHT DUTY	STANDARD LIGHT DUTY	SOLID LIGHT DUTY
12" (300 mm)	2812AG	PEDESTRIAN AASHTO H-10	STANDARD AASHTO H-20	SOLID AASHTO H-20
15" (375 mm)	2815AG	PEDESTRIAN AASHTO H-10	STANDARD AASHTO H-20	SOLID AASHTO H-20
18" (450 mm)	2818AG	PEDESTRIAN AASHTO H-10	STANDARD AASHTO H-20	SOLID AASHTO H-20
24" (600 mm)	2824AG	PEDESTRIAN AASHTO H-10	STANDARD AASHTO H-20	SOLID AASHTO H-20
30" (750 mm)	2830AG	PEDESTRIAN AASHTO H-20	STANDARD AASHTO H-20	SOLID AASHTO H-20

BUILDING 300
MADISON, WI
DATE:
DRAWN: LO
PROJECT #:
CHECKED: N/A

DATE	DRW	CHK	DESCRIPTION

THIS DRAWING HAS BEEN PREPARED BASED ON INFORMATION PROVIDED TO ADS UNDER THE DIRECTION OF THE SITE DESIGN ENGINEER OF RESPONSIBILITY OF THE SITE DESIGN ENGINEER TO ENSURE THAT THE PRODUCT(S) DEPICTED AND ALL ASSOCIATED DETAILS MEET ALL APP

Nyloplast®
770-932-2443 | WWW.NYLOPLAST-US.COM
ADS.
4640 TRUEMAN BLVD
HILLIARD, OH 43026
1-800-733-7473

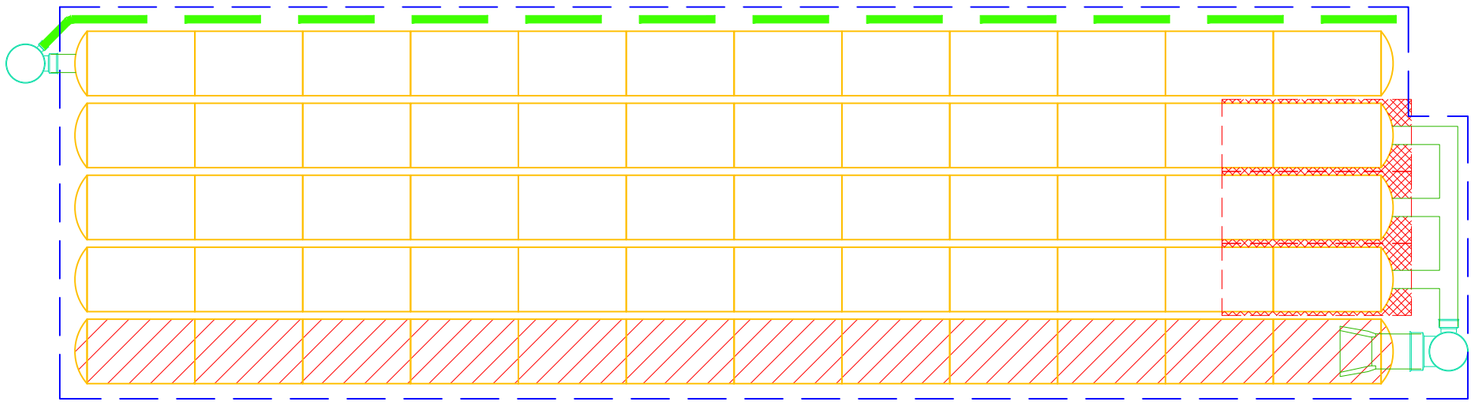

PROJECT INFORMATION	
ENGINEERED PRODUCT MANAGER	
ADS SALES REP	
PROJECT NO.	

Advanced Drainage Systems, Inc.

SiteAssist™
FOR STORMTECH
INSTALLATION INSTRUCTIONS
VISIT OUR APP

BUILDING 500

MADISON, WI

SC-740 STORMTECH CHAMBER SPECIFICATIONS

1. CHAMBERS SHALL BE STORMTECH SC-740.
2. CHAMBERS SHALL BE ARCH-SHAPED AND SHALL BE MANUFACTURED FROM VIRGIN, IMPACT-MODIFIED POLYPROPYLENE COPOLYMERS.
3. CHAMBERS SHALL MEET THE REQUIREMENTS OF ASTM F2418, "STANDARD SPECIFICATION FOR POLYPROPYLENE (PP) CORRUGATED WALL STORMWATER COLLECTION CHAMBERS".
4. CHAMBER ROWS SHALL PROVIDE CONTINUOUS, UNOBSTRUCTED INTERNAL SPACE WITH NO INTERNAL SUPPORTS THAT WOULD IMPEDE FLOW OR LIMIT ACCESS FOR INSPECTION.
5. THE STRUCTURAL DESIGN OF THE CHAMBERS, THE STRUCTURAL BACKFILL, AND THE INSTALLATION REQUIREMENTS SHALL ENSURE THAT THE LOAD FACTORS SPECIFIED IN THE AASHTO LRFD BRIDGE DESIGN SPECIFICATIONS, SECTION 12.12, ARE MET FOR: 1) LONG-DURATION DEAD LOADS AND 2) SHORT-DURATION LIVE LOADS, BASED ON THE AASHTO DESIGN TRUCK WITH CONSIDERATION FOR IMPACT AND MULTIPLE VEHICLE PRESENCES.
6. CHAMBERS SHALL BE DESIGNED, TESTED AND ALLOWABLE LOAD CONFIGURATIONS DETERMINED IN ACCORDANCE WITH ASTM F2787, "STANDARD PRACTICE FOR STRUCTURAL DESIGN OF THERMOPLASTIC CORRUGATED WALL STORMWATER COLLECTION CHAMBERS". LOAD CONFIGURATIONS SHALL INCLUDE: 1) INSTANTANEOUS (<1 MIN) AASHTO DESIGN TRUCK LIVE LOAD ON MINIMUM COVER 2) MAXIMUM PERMANENT (75-YR) COVER LOAD AND 3) ALLOWABLE COVER WITH PARKED (1-WEEK) AASHTO DESIGN TRUCK.
7. REQUIREMENTS FOR HANDLING AND INSTALLATION:
   - TO MAINTAIN THE WIDTH OF CHAMBERS DURING SHIPPING AND HANDLING, CHAMBERS SHALL HAVE INTEGRAL, INTERLOCKING STACKING LUGS.
   - TO ENSURE A SECURE JOINT DURING INSTALLATION AND BACKFILL, THE HEIGHT OF THE CHAMBER JOINT SHALL NOT BE LESS THAN 2".
   - TO ENSURE THE INTEGRITY OF THE ARCH SHAPE DURING INSTALLATION, a) THE ARCH STIFFNESS CONSTANT SHALL BE GREATER THAN OR EQUAL TO 550 LBS/FT/%. THE ASC IS DEFINED IN SECTION 6.2.8 OF ASTM F2418. AND b) TO RESIST CHAMBER DEFORMATION DURING INSTALLATION AT ELEVATED TEMPERATURES (ABOVE 73° F / 23° C), CHAMBERS SHALL BE PRODUCED FROM REFLECTIVE GOLD OR YELLOW COLORS.
8. ONLY CHAMBERS THAT ARE APPROVED BY THE SITE DESIGN ENGINEER WILL BE ALLOWED. UPON REQUEST BY THE SITE DESIGN ENGINEER OR OWNER, THE CHAMBER MANUFACTURER SHALL SUBMIT A STRUCTURAL EVALUATION FOR APPROVAL BEFORE DELIVERING CHAMBERS TO THE PROJECT SITE AS FOLLOWS:
   - THE STRUCTURAL EVALUATION SHALL BE SEALED BY A REGISTERED PROFESSIONAL ENGINEER.
   - THE STRUCTURAL EVALUATION SHALL DEMONSTRATE THAT THE SAFETY FACTORS ARE GREATER THAN OR EQUAL TO 1.95 FOR DEAD LOAD AND 1.75 FOR LIVE LOAD, THE MINIMUM REQUIRED BY ASTM F2787 AND BY SECTIONS 3 AND 12.12 OF THE AASHTO LRFD BRIDGE DESIGN SPECIFICATIONS FOR THERMOPLASTIC PIPE.
   - THE TEST DERIVED CREEP MODULUS AS SPECIFIED IN ASTM F2418 SHALL BE USED FOR PERMANENT DEAD LOAD DESIGN EXCEPT THAT IT SHALL BE THE 75-YEAR MODULUS USED FOR DESIGN.
9. CHAMBERS AND END CAPS SHALL BE PRODUCED AT AN ISO 9001 CERTIFIED MANUFACTURING FACILITY.

IMPORTANT - NOTES FOR THE BIDDING AND INSTALLATION OF THE SC-740 SYSTEM

1. STORMTECH SC-740 CHAMBERS SHALL NOT BE INSTALLED UNTIL THE MANUFACTURER'S REPRESENTATIVE HAS COMPLETED A PRE-CONSTRUCTION MEETING WITH THE INSTALLERS.
2. STORMTECH SC-740 CHAMBERS SHALL BE INSTALLED IN ACCORDANCE WITH THE "STORMTECH SC-310/SC-740/DC-780 CONSTRUCTION GUIDE".
3. CHAMBERS ARE NOT TO BE BACKFILLED WITH A DOZER OR AN EXCAVATOR SITUATED OVER THE CHAMBERS. STORMTECH RECOMMENDS 3 BACKFILL METHODS:
   - STONESHOOTER LOCATED OFF THE CHAMBER BED.
   - BACKFILL AS ROWS ARE BUILT USING AN EXCAVATOR ON THE FOUNDATION STONE OR SUBGRADE.
   - BACKFILL FROM OUTSIDE THE EXCAVATION USING A LONG BOOM HOE OR EXCAVATOR.
4. THE FOUNDATION STONE SHALL BE LEVELED AND COMPACTED PRIOR TO PLACING CHAMBERS.
5. JOINTS BETWEEN CHAMBERS SHALL BE PROPERLY SEATED PRIOR TO PLACING STONE.
6. MAINTAIN MINIMUM - 6" (150 mm) SPACING BETWEEN THE CHAMBER ROWS.
7. EMBEDMENT STONE SURROUNDING CHAMBERS MUST BE A CLEAN, CRUSHED, ANGULAR STONE 3/4-2" (20-50 mm).
8. THE CONTRACTOR MUST REPORT ANY DISCREPANCIES WITH CHAMBER FOUNDATION MATERIALS BEARING CAPACITIES TO THE SITE DESIGN ENGINEER.
9. ADS RECOMMENDS THE USE OF "FLEXSTORM CATCH IT" INSERTS DURING CONSTRUCTION FOR ALL INLETS TO PROTECT THE SUBSURFACE STORMWATER MANAGEMENT SYSTEM FROM CONSTRUCTION SITE RUNOFF.

NOTES FOR CONSTRUCTION EQUIPMENT

1. STORMTECH SC-740 CHAMBERS SHALL BE INSTALLED IN ACCORDANCE WITH THE "STORMTECH SC-310/SC-740/DC-780 CONSTRUCTION GUIDE".
2. THE USE OF CONSTRUCTION EQUIPMENT OVER SC-740 CHAMBERS IS LIMITED:
   - NO EQUIPMENT IS ALLOWED ON BARE CHAMBERS.
   - NO RUBBER TIRED LOADERS, DUMP TRUCKS, OR EXCAVATORS ARE ALLOWED UNTIL PROPER FILL DEPTHS ARE REACHED IN ACCORDANCE WITH THE "STORMTECH SC-310/SC-740/DC-780 CONSTRUCTION GUIDE".
   - WEIGHT LIMITS FOR CONSTRUCTION EQUIPMENT CAN BE FOUND IN THE "STORMTECH SC-310/SC-740/DC-780 CONSTRUCTION GUIDE".
3. FULL 36" (900 mm) OF STABILIZED COVER MATERIALS OVER THE CHAMBERS IS REQUIRED FOR DUMP TRUCK TRAVEL OR DUMPING.

USE OF A DOZER TO PUSH EMBEDMENT STONE BETWEEN THE ROWS OF CHAMBERS MAY CAUSE DAMAGE TO THE CHAMBERS AND IS NOT AN ACCEPTABLE BACKFILL METHOD. ANY CHAMBERS DAMAGED BY THE "DUMP AND PUSH" METHOD ARE NOT COVERED UNDER THE STORMTECH STANDARD WARRANTY.

CONTACT STORMTECH AT 1-888-892-2694 WITH ANY QUESTIONS ON INSTALLATION REQUIREMENTS OR WEIGHT LIMITS FOR CONSTRUCTION EQUIPMENT.

©2022 ADS, INC.

PROPOSED LAYOUT		PROPOSED ELEVATIONS	
44	STORMTECH SC-740 CHAMBERS	MAXIMUM ALLOWABLE GRADE (TOP OF PAVEMENT/UNPAVED):	903.45
8	STORMTECH SC-740 END CAPS	MINIMUM ALLOWABLE GRADE (UNPAVED WITH TRAFFIC):	897.45
12	STONE ABOVE (in)	MINIMUM ALLOWABLE GRADE (UNPAVED NO TRAFFIC):	896.95
6	STONE BELOW (in)	MINIMUM ALLOWABLE GRADE (TOP OF RIGID CONCRETE PAVEMENT):	896.95
40	STONE VOID	MINIMUM ALLOWABLE GRADE (BASE OF FLEXIBLE PAVEMENT):	896.95
4110	INSTALLED SYSTEM VOLUME (CF) (PERIMETER STONE INCLUDED) (COVER STONE INCLUDED) (BASE STONE INCLUDED)	TOP OF STONE:	896.45
		TOP OF SC-740 CHAMBER:	895.45
		12" x 12" TOP MANIFOLD INVERT:	893.99
		12" BOTTOM CONNECTION INVERT:	893.05
1811	SYSTEM AREA (SF)	24" ISOLATOR ROW PLUS INVERT:	892.96
213.8	SYSTEM PERIMETER (ft)	BOTTOM OF SC-740 CHAMBER:	892.95
		UNDERDRAIN INVERT:	892.45
		BOTTOM OF STONE:	892.45

*INVERT ABOVE BASE OF CHAMBER

PART TYPE	ITEM ON LAYOUT	DESCRIPTION	INVERT*	MAX FLOW
PREFABRICATED EZ END CAP	A	24" BOTTOM PREFABRICATED EZ END CAP, PART#: SC740ECEZ / TYP OF ALL 24" BOTTOM CONNECTIONS AND ISOLATOR PLUS ROWS	0.10"	
FLAMP	B	INSTALL FLAMP ON 24" ACCESS PIPE / PART#: SC74024RAMP		
MANIFOLD	C	12" x 12" TOP MANIFOLD, ADS N-12	12.50"	
NYLOPLAST (INLET W/ ISO PLUS ROW)	D	30" DIAMETER (24.00" SUMP MIN)		5.7 CFS IN
NYLOPLAST (OUTLET)	E	30" DIAMETER (DESIGN BY ENGINEER)		2.0 CFS OUT
UNDERDRAIN	F	6" ADS N-12 DUAL WALL PERFORATED HDPE UNDERDRAIN		

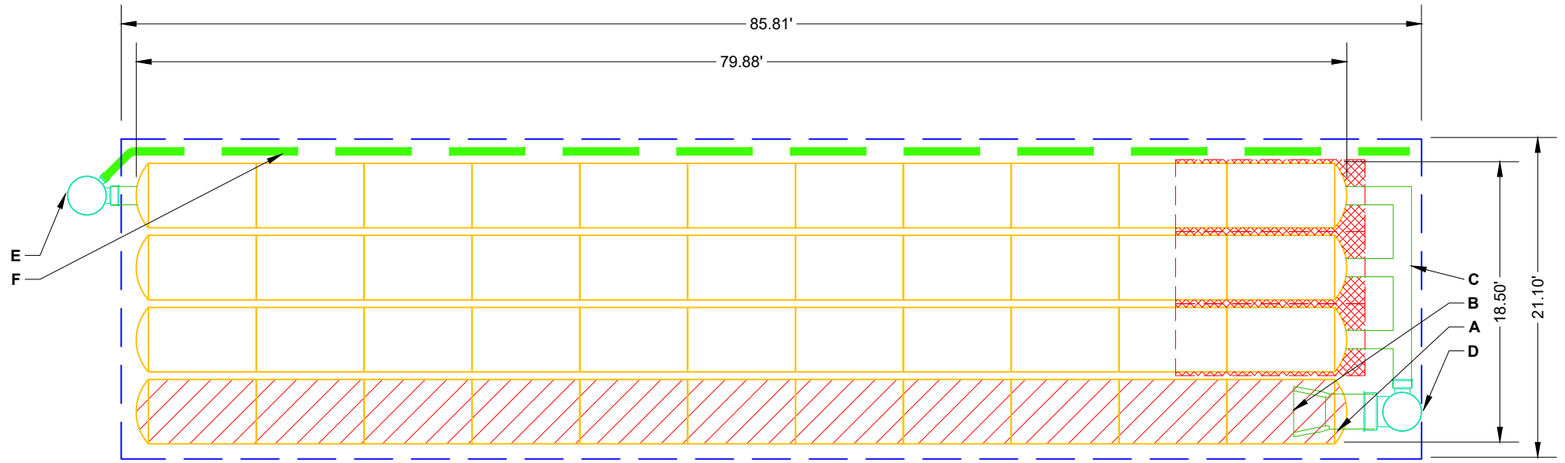

ISOLATOR ROW PLUS
(SEE DETAIL)

PLACE MINIMUM 12.50' OF ADSPLUS125 WOVEN GEOTEXTILE OVER BEDDING STONE AND UNDERNEATH CHAMBER FEET FOR SCOUR PROTECTION AT ALL CHAMBER INLET ROWS

BED LIMITS

NOTES

- MANIFOLD SIZE TO BE DETERMINED BY SITE DESIGN ENGINEER. SEE TECH NOTE #6.32 FOR MANIFOLD SIZING GUIDANCE.
- DUE TO THE ADAPTATION OF THIS CHAMBER SYSTEM TO SPECIFIC SITE AND DESIGN CONSTRAINTS, IT MAY BE NECESSARY TO CUT AND COUPLE ADDITIONAL PIPE TO STANDARD MANIFOLD COMPONENTS IN THE FIELD.
- THE SITE DESIGN ENGINEER MUST REVIEW ELEVATIONS AND IF NECESSARY ADJUST GRADING TO ENSURE THE CHAMBER COVER REQUIREMENTS ARE MET.
- THIS CHAMBER SYSTEM WAS DESIGNED WITHOUT SITE-SPECIFIC INFORMATION ON SOIL CONDITIONS OR BEARING CAPACITY. THE SITE DESIGN ENGINEER IS RESPONSIBLE FOR DETERMINING THE SUITABILITY OF THE SOIL AND PROVIDING THE BEARING CAPACITY OF THE INSITU SOILS. THE BASE STONE DEPTH MAY BE INCREASED OR DECREASED ONCE THIS INFORMATION IS PROVIDED.
- **NOT FOR CONSTRUCTION:** THIS LAYOUT IS FOR DIMENSIONAL PURPOSES ONLY TO PROVE CONCEPT & THE REQUIRED STORAGE VOLUME CAN BE ACHIEVED ON SITE.

BUILDING 500
MADISON, WI
DATE:
DRAWN: LO
CHECKED: N/A
PROJECT #:

DATE	DRW	CHK	DESCRIPTION

THIS DRAWING HAS BEEN PREPARED BASED ON INFORMATION PROVIDED TO ADS UNDER THE DIRECTION OF THE SITE DESIGN ENGINEER OR OTHER PROJECT REPRESENTATIVE. THE SITE DESIGN ENGINEER SHALL REVIEW THIS DRAWING PRIOR TO CONSTRUCTION. IT IS THE ULTIMATE RESPONSIBILITY OF THE SITE DESIGN ENGINEER TO ENSURE THAT THE PRODUCT(S) DEPICTED AND ALL ASSOCIATED DETAILS MEET ALL APPLICABLE LAWS, REGULATIONS, AND PROJECT REQUIREMENTS.

StormTech®
Chamber System
888-892-2694 | WWW.STORMTECH.COM

4640 TRUEMAN BLVD
HILLIARD, OH 43026
1-800-733-7473

0 10' 20'

ACCEPTABLE FILL MATERIALS: STORMTECH SC-740 CHAMBER SYSTEMS

MATERIAL LOCATION		DESCRIPTION	AASHTO MATERIAL CLASSIFICATIONS	COMPACTION / DENSITY REQUIREMENT
D	**FINAL FILL:** FILL MATERIAL FOR LAYER 'D' STARTS FROM THE TOP OF THE 'C' LAYER TO THE BOTTOM OF FLEXIBLE PAVEMENT OR UNPAVED FINISHED GRADE ABOVE. NOTE THAT PAVEMENT SUBBASE MAY BE PART OF THE 'D' LAYER.	ANY SOIL/ROCK MATERIALS, NATIVE SOILS, OR PER ENGINEER'S PLANS. CHECK PLANS FOR PAVEMENT SUBGRADE REQUIREMENTS.	N/A	PREPARE PER SITE DESIGN ENGINEER'S PLANS. PAVED INSTALLATIONS MAY HAVE STRINGENT MATERIAL AND PREPARATION REQUIREMENTS.
C	**INITIAL FILL:** FILL MATERIAL FOR LAYER 'C' STARTS FROM THE TOP OF THE EMBEDMENT STONE ('B' LAYER) TO 18" (450 mm) ABOVE THE TOP OF THE CHAMBER. NOTE THAT PAVEMENT SUBBASE MAY BE A PART OF THE 'C' LAYER.	GRANULAR WELL-GRADED SOIL/AGGREGATE MIXTURES, <35% FINES OR PROCESSED AGGREGATE. MOST PAVEMENT SUBBASE MATERIALS CAN BE USED IN LIEU OF THIS LAYER.	AASHTO M145[1] A-1, A-2-4, A-3 OR AASHTO M43[1] 3, 357, 4, 467, 5, 56, 57, 6, 67, 68, 7, 78, 8, 89, 9, 10	BEGIN COMPACTIONS AFTER 12" (300 mm) OF MATERIAL OVER THE CHAMBERS IS REACHED. COMPACT ADDITIONAL LAYERS IN 6" (150 mm) MAX LIFTS TO A MIN. 95% PROCTOR DENSITY FOR WELL GRADED MATERIAL AND 95% RELATIVE DENSITY FOR PROCESSED AGGREGATE MATERIALS. ROLLER GROSS VEHICLE WEIGHT NOT TO EXCEED 12,000 lbs (53 kN). DYNAMIC FORCE NOT TO EXCEED 20,000 lbs (89 kN).
B	**EMBEDMENT STONE:** FILL SURROUNDING THE CHAMBERS FROM THE FOUNDATION STONE ('A' LAYER) TO THE 'C' LAYER ABOVE.	CLEAN, CRUSHED, ANGULAR STONE	AASHTO M43[1] 3, 357, 4, 467, 5, 56, 57	NO COMPACTION REQUIRED.
A	**FOUNDATION STONE:** FILL BELOW CHAMBERS FROM THE SUBGRADE UP TO THE FOOT (BOTTOM) OF THE CHAMBER.	CLEAN, CRUSHED, ANGULAR STONE	AASHTO M43[1] 3, 357, 4, 467, 5, 56, 57	PLATE COMPACT OR ROLL TO ACHIEVE A FLAT SURFACE.[2,3]

PLEASE NOTE:
1. THE LISTED AASHTO DESIGNATIONS ARE FOR GRADATIONS ONLY. THE STONE MUST ALSO BE CLEAN, CRUSHED, ANGULAR. FOR EXAMPLE, A SPECIFICATION FOR #4 STONE WOULD STATE: "CLEAN, CRUSHED, ANGULAR NO. 4 (AASHTO M43) STONE".
2. STORMTECH COMPACTION REQUIREMENTS ARE MET FOR 'A' LOCATION MATERIALS WHEN PLACED AND COMPACTED IN 6" (150 mm) (MAX) LIFTS USING TWO FULL COVERAGES WITH A VIBRATORY COMPACTOR.
3. WHERE INFILTRATION SURFACES MAY BE COMPROMISED BY COMPACTION, FOR STANDARD DESIGN LOAD CONDITIONS, A FLAT SURFACE MAY BE ACHIEVED BY RAKING OR DRAGGING WITHOUT COMPACTION EQUIPMENT. FOR SPECIAL LOAD DESIGNS, CONTACT STORMTECH FOR COMPACTION REQUIREMENTS.
4. ONCE LAYER 'C' IS PLACED, ANY SOIL/MATERIAL CAN BE PLACED IN LAYER 'D' UP TO THE FINISHED GRADE. MOST PAVEMENT SUBBASE SOILS CAN BE USED TO REPLACE THE MATERIAL REQUIREMENTS OF LAYER 'C' OR 'D' AT THE SITE DESIGN ENGINEER'S DISCRETION.

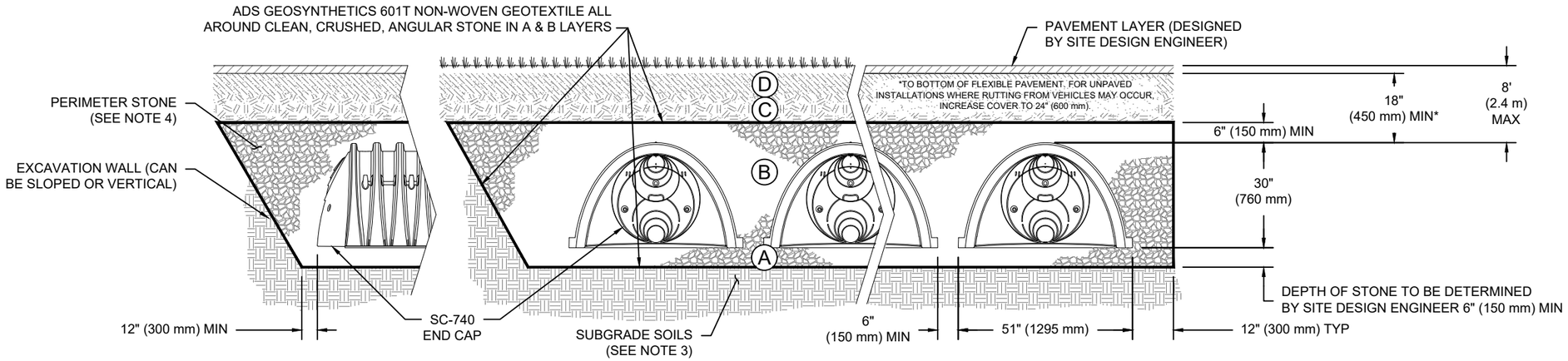

NOTES:

1. CHAMBERS SHALL MEET THE REQUIREMENTS OF ASTM F2418, "STANDARD SPECIFICATION FOR POLYPROPYLENE (PP) CORRUGATED WALL STORMWATER COLLECTION CHAMBERS".
2. SC-740 CHAMBERS SHALL BE DESIGNED IN ACCORDANCE WITH ASTM F2787 "STANDARD PRACTICE FOR STRUCTURAL DESIGN OF THERMOPLASTIC CORRUGATED WALL STORMWATER COLLECTION CHAMBERS".
3. THE SITE DESIGN ENGINEER IS RESPONSIBLE FOR ASSESSING THE BEARING RESISTANCE (ALLOWABLE BEARING CAPACITY) OF THE SUBGRADE SOILS AND THE DEPTH OF FOUNDATION STONE WITH CONSIDERATION FOR THE RANGE OF EXPECTED SOIL MOISTURE CONDITIONS.
4. PERIMETER STONE MUST BE EXTENDED HORIZONTALLY TO THE EXCAVATION WALL FOR BOTH VERTICAL AND SLOPED EXCAVATION WALLS.
5. REQUIREMENTS FOR HANDLING AND INSTALLATION:
   - TO MAINTAIN THE WIDTH OF CHAMBERS DURING SHIPPING AND HANDLING, CHAMBERS SHALL HAVE INTEGRAL, INTERLOCKING STACKING LUGS.
   - TO ENSURE A SECURE JOINT DURING INSTALLATION AND BACKFILL, THE HEIGHT OF THE CHAMBER JOINT SHALL NOT BE LESS THAN 2".
   - TO ENSURE THE INTEGRITY OF THE ARCH SHAPE DURING INSTALLATION, a) THE ARCH STIFFNESS CONSTANT SHALL BE GREATER THAN OR EQUAL TO 550 LBS/FT/%. THE ASC IS DEFINED IN SECTION 6.2.8 OF ASTM F2418. AND b) TO RESIST CHAMBER DEFORMATION DURING INSTALLATION AT ELEVATED TEMPERATURES (ABOVE 73° F / 23° C), CHAMBERS SHALL BE PRODUCED FROM REFLECTIVE GOLD OR YELLOW COLORS.

BUILDING 500
MADISON, WI
DATE:
DRAWN: LO
PROJECT #:
CHECKED: N/A

DATE	DRW	CHK	DESCRIPTION

StormTech®
Chamber System
888-892-2694 | WWW.STORMTECH.COM

4640 TRUEMAN BLVD
HILLIARD, OH 43026
1-800-733-7473

THIS DRAWING HAS BEEN PREPARED BASED ON INFORMATION PROVIDED TO ADS UNDER THE DIRECTION OF THE SITE DESIGN ENGINEER OR OTHER PROJECT REPRESENTATIVE. THE SITE DESIGN ENGINEER SHALL REVIEW THIS DRAWING PRIOR TO CONSTRUCTION. IT IS THE ULTIMATE RESPONSIBILITY OF THE SITE DESIGN ENGINEER TO ENSURE THAT THE PRODUCT(S) DEPICTED AND ALL ASSOCIATED DETAILS MEET ALL APPLICABLE LAWS, REGULATIONS, AND PROJECT REQUIREMENTS.

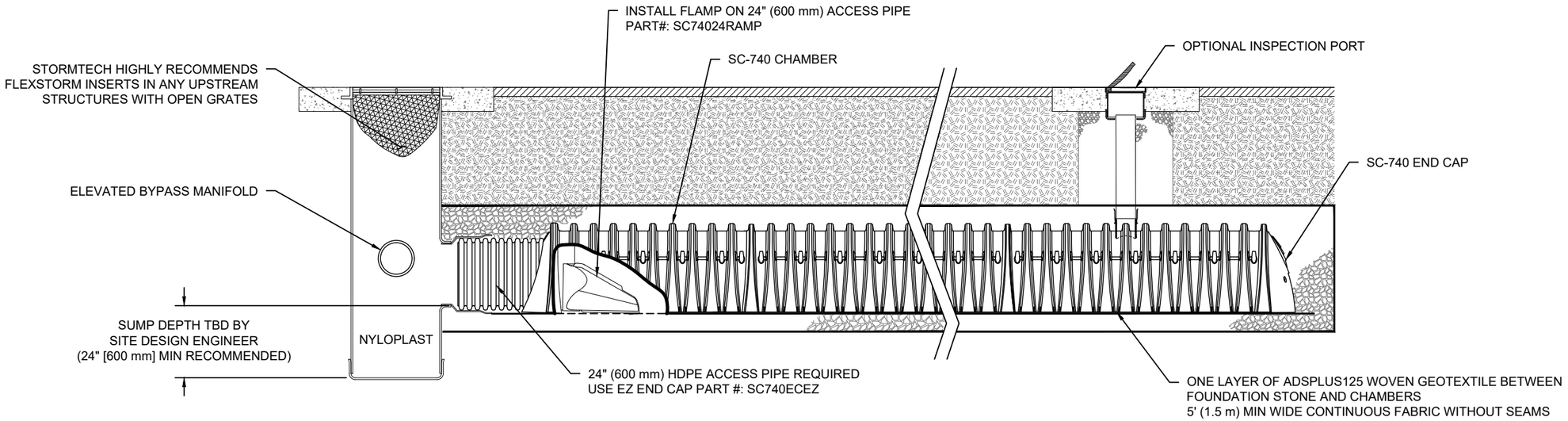

SC-740 ISOLATOR ROW PLUS DETAIL
NTS

INSPECTION & MAINTENANCE

STEP 1) INSPECT ISOLATOR ROW PLUS FOR SEDIMENT
- A. INSPECTION PORTS (IF PRESENT)
  - A.1. REMOVE/OPEN LID ON NYLOPLAST INLINE DRAIN
  - A.2. REMOVE AND CLEAN FLEXSTORM FILTER IF INSTALLED
  - A.3. USING A FLASHLIGHT AND STADIA ROD, MEASURE DEPTH OF SEDIMENT AND RECORD ON MAINTENANCE LOG
  - A.4. LOWER A CAMERA INTO ISOLATOR ROW PLUS FOR VISUAL INSPECTION OF SEDIMENT LEVELS (OPTIONAL)
  - A.5. IF SEDIMENT IS AT, OR ABOVE, 3" (80 mm) PROCEED TO STEP 2. IF NOT, PROCEED TO STEP 3.
- B. ALL ISOLATOR PLUS ROWS
  - B.1. REMOVE COVER FROM STRUCTURE AT UPSTREAM END OF ISOLATOR ROW PLUS
  - B.2. USING A FLASHLIGHT, INSPECT DOWN THE ISOLATOR ROW PLUS THROUGH OUTLET PIPE
    - i) MIRRORS ON POLES OR CAMERAS MAY BE USED TO AVOID A CONFINED SPACE ENTRY
    - ii) FOLLOW OSHA REGULATIONS FOR CONFINED SPACE ENTRY IF ENTERING MANHOLE
  - B.3. IF SEDIMENT IS AT, OR ABOVE, 3" (80 mm) PROCEED TO STEP 2. IF NOT, PROCEED TO STEP 3.

STEP 2) CLEAN OUT ISOLATOR ROW PLUS USING THE JETVAC PROCESS
- A. A FIXED CULVERT CLEANING NOZZLE WITH REAR FACING SPREAD OF 45" (1.1 m) OR MORE IS PREFERRED
- B. APPLY MULTIPLE PASSES OF JETVAC UNTIL BACKFLUSH WATER IS CLEAN
- C. VACUUM STRUCTURE SUMP AS REQUIRED

STEP 3) REPLACE ALL COVERS, GRATES, FILTERS, AND LIDS; RECORD OBSERVATIONS AND ACTIONS.

STEP 4) INSPECT AND CLEAN BASINS AND MANHOLES UPSTREAM OF THE STORMTECH SYSTEM.

NOTES

1. INSPECT EVERY 6 MONTHS DURING THE FIRST YEAR OF OPERATION. ADJUST THE INSPECTION INTERVAL BASED ON PREVIOUS OBSERVATIONS OF SEDIMENT ACCUMULATION AND HIGH WATER ELEVATIONS.

2. CONDUCT JETTING AND VACTORING ANNUALLY OR WHEN INSPECTION SHOWS THAT MAINTENANCE IS NECESSARY.

BUILDING 500
MADISON, WI
DATE:
DRAWN: LO
PROJECT #:
CHECKED: N/A

DATE	DRW	CHK	DESCRIPTION

4640 TRUEMAN BLVD
HILLIARD, OH 43026
1-800-733-7473

StormTech®
Chamber System
888-892-2694 | WWW.STORMTECH.COM

THIS DRAWING HAS BEEN PREPARED BASED ON INFORMATION PROVIDED TO ADS UNDER THE DIRECTION OF THE SITE DESIGN ENGINEER OR OTHER PROJECT REPRESENTATIVE. THE SITE DESIGN ENGINEER SHALL REVIEW THIS DRAWING PRIOR TO CONSTRUCTION. IT IS THE ULTIMATE RESPONSIBILITY OF THE SITE DESIGN ENGINEER TO ENSURE THAT THE PRODUCT(S) DEPICTED AND ALL ASSOCIATED DETAILS MEET ALL APPLICABLE LAWS, REGULATIONS, AND PROJECT REQUIREMENTS.

UNDERDRAIN DETAIL

NTS

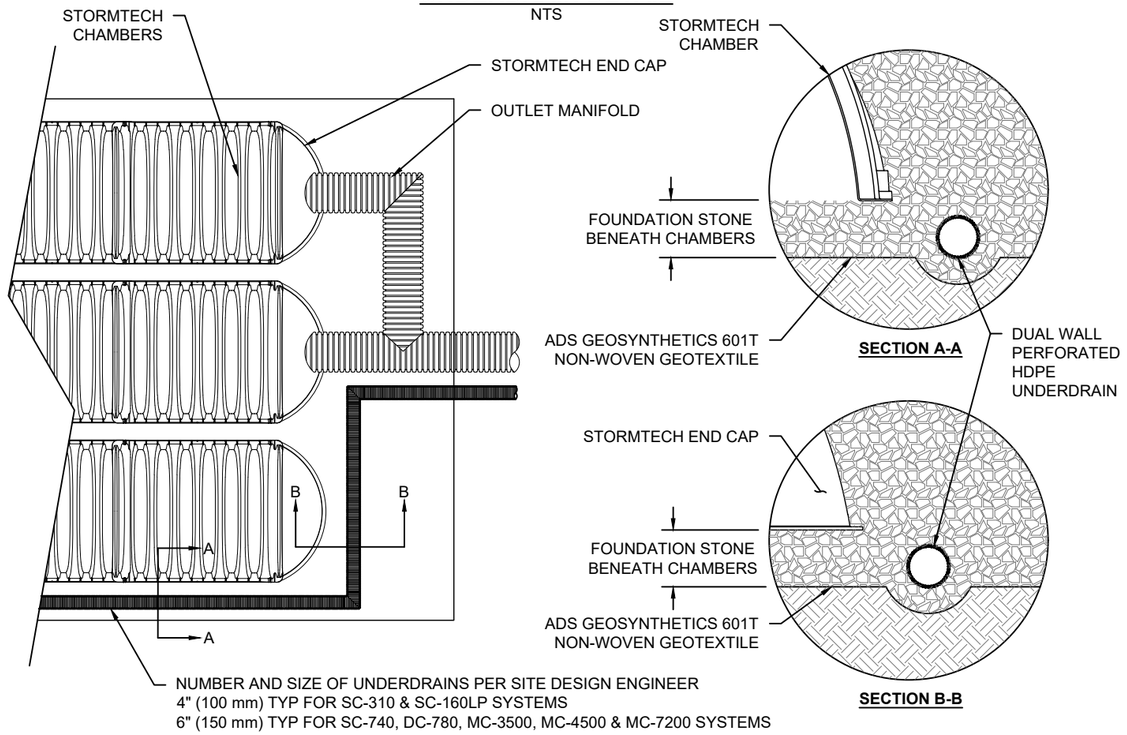

SC-740 TECHNICAL SPECIFICATION

NTS

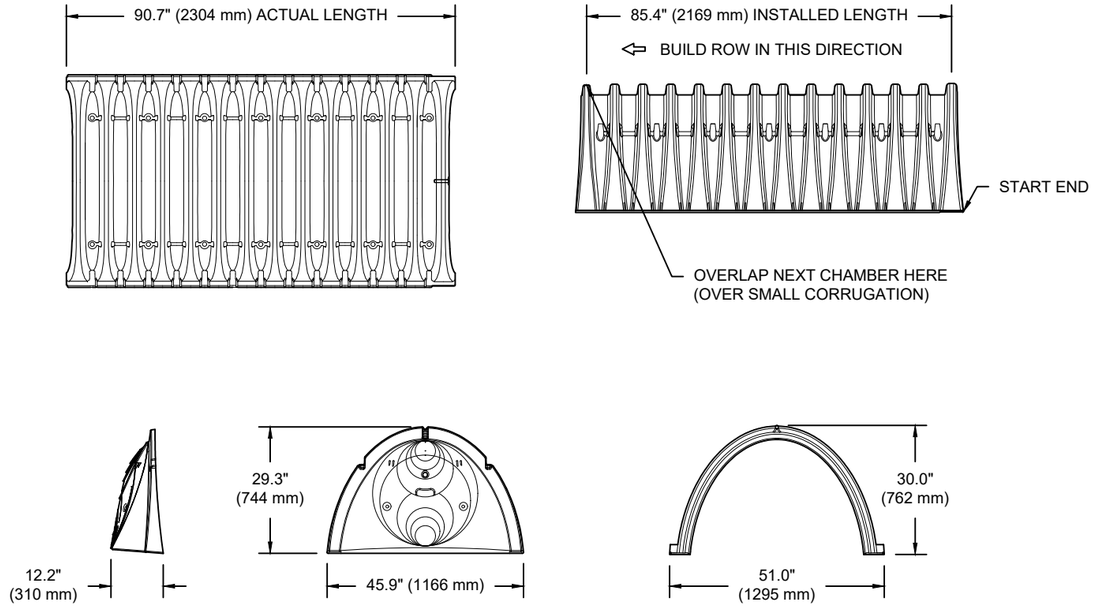

NOMINAL CHAMBER SPECIFICATIONS

SIZE (W X H X INSTALLED LENGTH)	51.0" X 30.0" X 85.4"	(1295 mm X 762 mm X 2169 mm)
CHAMBER STORAGE	45.9 CUBIC FEET	(1.30 m³)
MINIMUM INSTALLED STORAGE*	74.9 CUBIC FEET	(2.12 m³)
WEIGHT	75.0 lbs.	(33.6 kg)

*ASSUMES 6" (152 mm) STONE ABOVE, BELOW, AND BETWEEN CHAMBERS

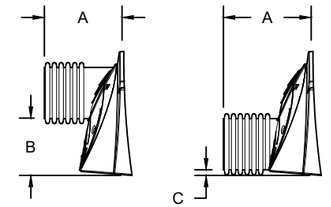

PRE-FAB STUB AT BOTTOM OF END CAP WITH FLAMP END WITH "BR"
PRE-FAB STUBS AT BOTTOM OF END CAP FOR PART NUMBERS ENDING WITH "B"
PRE-FAB STUBS AT TOP OF END CAP FOR PART NUMBERS ENDING WITH "T"
PRE-CORED END CAPS END WITH "PC"

PART #	STUB	A	B	C
SC740EPE06T / SC740EPE06TPC	6" (150 mm)	10.9" (277 mm)	18.5" (470 mm)	---
SC740EPE06B / SC740EPE06BPC			---	0.5" (13 mm)
SC740EPE08T /SC740EPE08TPC	8" (200 mm)	12.2" (310 mm)	16.5" (419 mm)	---
SC740EPE08B / SC740EPE08BPC			---	0.6" (15 mm)
SC740EPE10T / SC740EPE10TPC	10" (250 mm)	13.4" (340 mm)	14.5" (368 mm)	---
SC740EPE10B / SC740EPE10BPC			---	0.7" (18 mm)
SC740EPE12T / SC740EPE12TPC	12" (300 mm)	14.7" (373 mm)	12.5" (318 mm)	---
SC740EPE12B / SC740EPE12BPC			---	1.2" (30 mm)
SC740EPE15T / SC740EPE15TPC	15" (375 mm)	18.4" (467 mm)	9.0" (229 mm)	---
SC740EPE15B / SC740EPE15BPC			---	1.3" (33 mm)
SC740EPE18T / SC740EPE18TPC	18" (450 mm)	19.7" (500 mm)	5.0" (127 mm)	---
SC740EPE18B / SC740EPE18BPC			---	1.6" (41 mm)
SC740ECEZ*	24" (600 mm)	18.5" (470 mm)	---	0.1" (3 mm)

ALL STUBS, EXCEPT FOR THE SC740ECEZ ARE PLACED AT BOTTOM OF END CAP SUCH THAT THE OUTSIDE DIAMETER OF THE STUB IS FLUSH WITH THE BOTTOM OF THE END CAP. FOR ADDITIONAL INFORMATION CONTACT STORMTECH AT 1-888-892-2694.

* FOR THE SC740ECEZ THE 24" (600 mm) STUB LIES BELOW THE BOTTOM OF THE END CAP APPROXIMATELY 1.75" (44 mm). BACKFILL MATERIAL SHOULD BE REMOVED FROM BELOW THE N-12 STUB SO THAT THE FITTING SITS LEVEL.

NOTE: ALL DIMENSIONS ARE NOMINAL

BUILDING 500
MADISON, WI
DATE:
DRAWN: LO
PROJECT #:
CHECKED: N/A

DESCRIPTION	CHK	DRW	DATE

StormTech®
Chamber System
888-892-2694 | WWW.STORMTECH.COM

4640 TRUEMAN BLVD
HILLIARD, OH 43026
1-800-733-7473

THIS DRAWING HAS BEEN PREPARED BASED ON INFORMATION PROVIDED TO ADS UNDER THE DIRECTION OF THE SITE DESIGN ENGINEER OR OTHER PROJECT REPRESENTATIVE. THE SITE DESIGN ENGINEER SHALL REVIEW THIS DRAWING PRIOR TO CONSTRUCTION. IT IS THE ULTIMATE RESPONSIBILITY OF THE SITE DESIGN ENGINEER TO ENSURE THAT THE PRODUCT(S) DEPICTED AND ALL ASSOCIATED DETAILS MEET ALL APPLICABLE LAWS, REGULATIONS, AND PROJECT REQUIREMENTS.

NYLOPLAST DRAIN BASIN

NTS

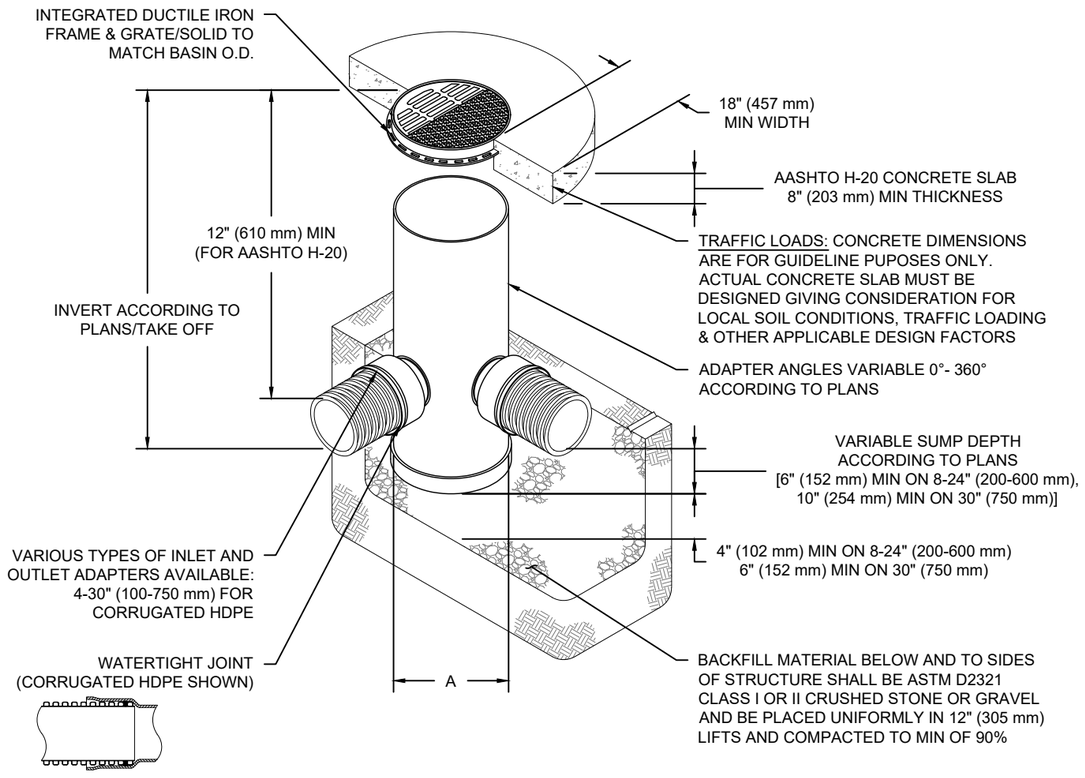

NOTES

1. 8-30" (200-750 mm) GRATES/SOLID COVERS SHALL BE DUCTILE IRON PER ASTM A536 GRADE 70-50-05
2. 12-30" (300-750 mm) FRAMES SHALL BE DUCTILE IRON PER ASTM A536 GRADE 70-50-05
3. DRAIN BASIN TO BE CUSTOM MANUFACTURED ACCORDING TO PLAN DETAILS
4. DRAINAGE CONNECTION STUB JOINT TIGHTNESS SHALL CONFORM TO ASTM D3212 FOR CORRUGATED HDPE (ADS & HANCOR DUAL WALL) & SDR 35 PVC
5. FOR COMPLETE DESIGN AND PRODUCT INFORMATION: **WWW.NYLOPLAST-US.COM**
6. TO ORDER CALL: **800-821-6710**

A	PART #	GRATE/SOLID COVER OPTIONS		
8" (200 mm)	2808AG	PEDESTRIAN LIGHT DUTY	STANDARD LIGHT DUTY	SOLID LIGHT DUTY
10" (250 mm)	2810AG	PEDESTRIAN LIGHT DUTY	STANDARD LIGHT DUTY	SOLID LIGHT DUTY
12" (300 mm)	2812AG	PEDESTRIAN AASHTO H-10	STANDARD AASHTO H-20	SOLID AASHTO H-20
15" (375 mm)	2815AG	PEDESTRIAN AASHTO H-10	STANDARD AASHTO H-20	SOLID AASHTO H-20
18" (450 mm)	2818AG	PEDESTRIAN AASHTO H-10	STANDARD AASHTO H-20	SOLID AASHTO H-20
24" (600 mm)	2824AG	PEDESTRIAN AASHTO H-10	STANDARD AASHTO H-20	SOLID AASHTO H-20
30" (750 mm)	2830AG	PEDESTRIAN AASHTO H-20	STANDARD AASHTO H-20	SOLID AASHTO H-20

BUILDING 500
MADISON, WI

DATE: | DRAWN: LO
PROJECT #: | CHECKED: N/A

DATE	DRW	CHK	DESCRIPTION

Nyloplast®
770-932-2443 | WWW.NYLOPLAST-US.COM
4640 TRUEMAN BLVD
HILLIARD, OH 43026
1-800-733-7473
ADS.

THIS DRAWING HAS BEEN PREPARED BASED ON INFORMATION PROVIDED TO ADS UNDER THE DIRECTION OF THE SITE DESIGN ENGINEER OR OTHER PROJECT REPRESENTATIVE. THE SITE DESIGN ENGINEER SHALL REVIEW THIS DRAWING PRIOR TO CONSTRUCTION. IT IS THE ULTIMATE RESPONSIBILITY OF THE SITE DESIGN ENGINEER TO ENSURE THAT THE PRODUCT(S) DEPICTED AND ALL ASSOCIATED DETAILS MEET ALL APPLICABLE LAWS, REGULATIONS, AND PROJECT REQUIREMENTS.

EXTERIOR LUMINAIRE SCHEDULE

TAG	DESCRIPTION	FIXTURE				FIXTURE	FIXTURE		POLE ASSEMBLY						
		LUMENS	WATTS	LAMP TYPE	DISTRIBUTION	COLOR TEMP	MANUFACTURER	MODEL #	FIXTURES PER POLE	TOTAL WATTS	BASE ABOVE GRADE	POLE HEIGHT	HEIGHT ABOVE GRADE	MANUFACTURER	MODEL #
L1	LED SINGLE HEAD PARKING POLE MOUNTED FIXTURE	7,000	62	LED	TYPE 3	3000	SELUX	SACL-R3-5G700-30K-18-BK-UNV-DS	1	62	0' - 0"	18' - 0"	18' - 0"	SELUX	A35-14-BK-BC5
L2-D	LED DOUBLE HEAD PARKING POLE MOUNTED FIXTURE	15,630	146	LED	TYPE 3	3000	LANDSCAPE FORMS	LE350-T3-HO-CLR-30K-UV1-4B-NMS-BK	2	292	0' - 0"	25' - 0"	25' - 0"	LANDSCAPE FORMS	LE-25-A-NTW-NUT-BK
L2-S	LED SINGLE HEAD PARKING POLE MOUNTED FIXTURE	7,815	73	LED	TYPE 3	3000	LANDSCAPE FORMS	LE350-T3-HO-CLR-30K-UV1-4B-NMS-BK	1	73	0' - 0"	25' - 0"	25' - 0"	LANDSCAPE FORMS	LE-25-A-NTW-NUT-BK
L3	LED SINGLE HEAD PARKING POLE MOUNTED FIXTURE	7,815	14	LED	TYPE 3	3000	SELUX	OLPL-F40-SBX-2G350-30-UNV-DS	4	56	0' - 0"	25' - 0"	25' - 0"	SELUX	
L4	LED SPOT ACCENT FIXTURE	3,103	29	LED		3000	GUNNAR	GU1P-18-B-1-S							
L5	LED TREE UPLIGHT ACCENT FIXTURE	600	9	LED		3000	KICHLER	16020-BKT-30							
L6	LED BOLLARD FIXTURE	424	40	LED		3000	FORMS+SURFACES	HELIO SERIES 600							
LE-1	LED EXTERIOR DOWNLIGHT	600	9	LED		2700	JUNO	IC1LED-G4-06LM-27K-90CRI							
SL-1	LED EXTERIOR SCONCE	1,124	15	LED		3000	EUREKA	3450-LED.HO-30-277V-DV-BLKE							
SL-2	LED EXTERIOR SCONCE	1,124	15	LED		3000	EUREKA	3450							
SL-3	LED EXTERIOR CYLINDER	2,400	30	LED		3000	ALCON	11240-2-BK (NO UP LIGHT)							

SITE ILLUMINANCE RESULTS

Calculation Points Name	Average	Maximum	Minimum	Avg/Min	Max/Min
KELAB DRIVE	2.1 fc	3.4 fc	0.6 fc	3.4	5.5
PARKING LOT	1.3 fc	7.6 fc	0.4 fc	3.6	21.5
BLDG 200 PED N & E WALKWAY	2.0 fc	8.8 fc	0.4 fc	4.9	21.0
BLDG 300/200 PED WALKWAY	1.9 fc	7.8 fc	0.4 fc	4.4	18.3
BLDG 100 PED S WALKWAY	1.6 fc	2.3 fc	0.7 fc	2.2	3.2

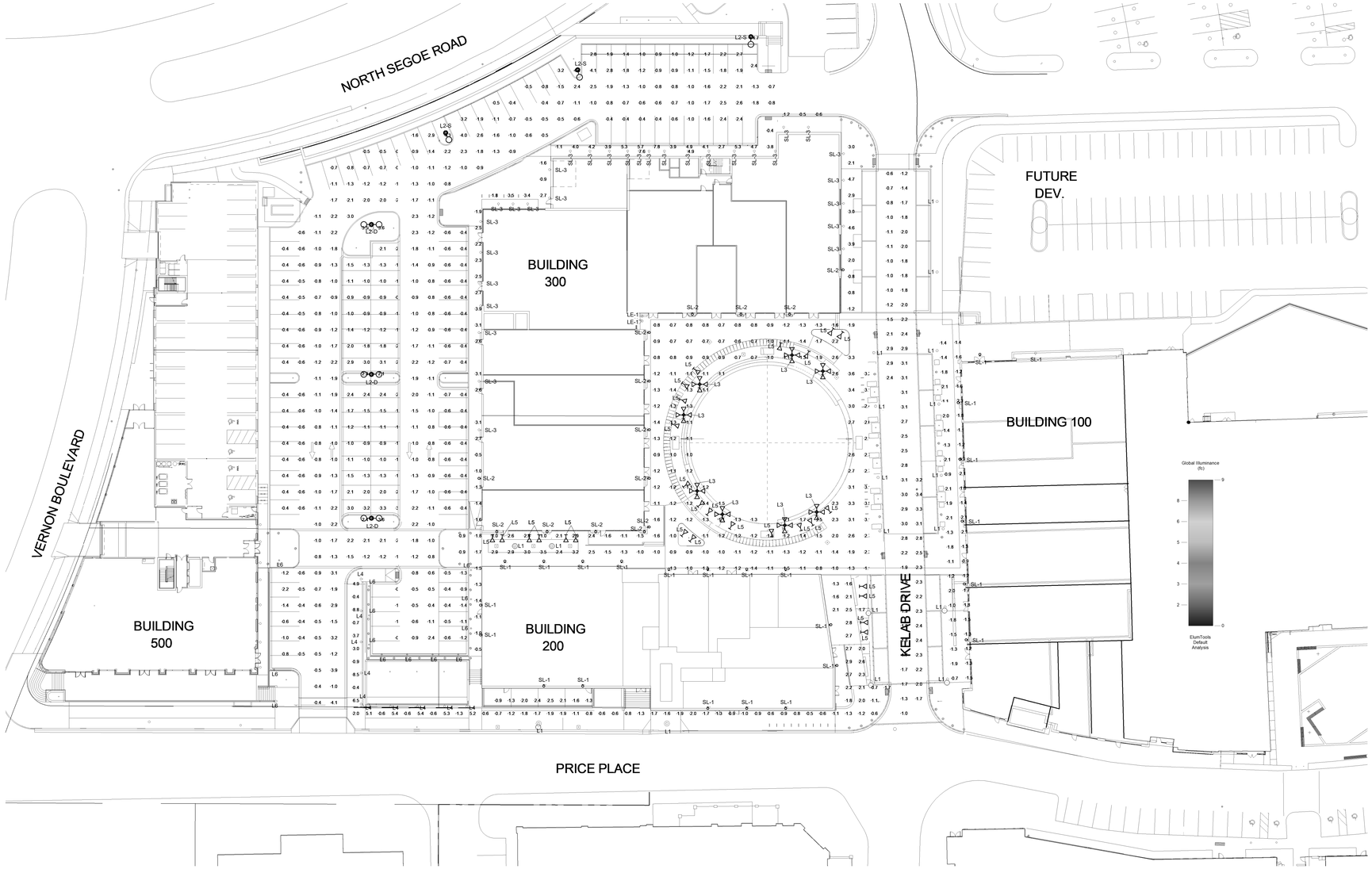

1 ES100 SITE PLAN - PHOTOMETRIC
SCALE: 1" = 30'-0"

eua
milwaukee | madison | green bay | denver | atlanta

JDR ENGINEERING, INC.
5525 NOBEL DRIVE
SUITE 110
MADISON, WI 53711
PH: 608.277.1728 FAX: 608.271.7046
JDR PROJECT NO: 22.0261

PROJECT INFORMATION

HILLDALE PHASE 3

702 N. Midvale Blvd.
Madison, WI 53705

ISSUANCE AND REVISIONS

DATE	DESCRIPTION
03/13/2023	CITY SUBMITTAL

KEY PLAN

SHEET INFORMATION

PROGRESS DOCUMENTS NOT FOR CONSTRUCTION

These documents reflect progress and intent and may be subject to change, including additional detail. These are not final construction documents and shall not be used for final bidding or construction-related purposes.

PROJECT MANAGER	JP
PROJECT NUMBER	719494-01

SITE PLAN - PHOTOMETRIC

ES100

© 2022 Eppstein Uhen Architects, Inc.

Date: _____ Customer: _____

Project: _____

Type: L1 _____ Qty: _____

selux

Saturn Cutoff LED



Order Code: _____ - _____ - _____ - _____ - _____ - _____ - _____ - _____ - _____

Pole Order Code: _____ - _____ - _____ - _____

Series | Height | Finish | Options

SACL	Series	**SACL** Saturn Cutoff LED							
R3	Optics	**R1** Type I	**R2** Type II	**R3** Type III	**R3W** Type III (Wide)	**R4** Type IV	**R5R** Type V (Round)	**R5S** Type V (Square)	**R5Q** Type V (Rectangular)
1	Mounting	**1** Single	**1A** Single Arm Mount	**2** Double	**W** Wall Mount				
5G700	Light Engine	**5G450** 39W/4442lm	**5G700** 62W/6644lm	**5G105** 93W/9241lm					* Based on R1 distribution in 3000K CCT
30K	CCT	**27**[1] 2700K	**30**[1] 3000K	**40** 4000K	VERIFY				[1] IDA Approved * For other CCT please consult factory
18	Power Cord Length	**08** 8 ft	**10** 10 ft	**12** 12 ft	**14** 14ft	**16** 16 ft	**18** 18 ft	**XX** XX	* For 1 mounting use the pole height. For 1A or 2 mounting use the pole height +2
BK	Finish	**WH** White	**BK** Black	**BL** Semi-Matte Black	**BZ** Bronze	**SV** Silver	**SP** Specify Premium Color		
UNV	Voltage	**UNV** 120V- 277V	**120** 120V	**240** 240V	**277** 277V	**347**[2] 347V	**480**[2] 480V		[2] Equipped with step-down transformer
DS	Options	**DM**[4] Dimming (0-10V)	**HS**[3] House Side Shield (180°)	**HL30**[4,5] Hi-Lo Switching Low Output 30%	**HL50**[4,5] Hi-Lo Switching Low Output 50%	**DS** No Uplight Finish	**PCT**[6] Photocell Tenon	**MS**[4,6] Pole Motion Sensor with Optional Photocell (See pagr 3 for order code)	[3] Type I, II, III, and IV only [4] DM, HLXX or MS only. Cannot be combined. [5] 120V, 240V or 277V only [6] PCT or MS only. Cannot be combined.

Product Modifications

Please list modification requirements for review by factory:

Approvals

Date:

IP65

Selux Corporation © 2022, T 845-834-1400, 800-735-8927, F 845-834-1401, www.selux.us
In a continuing effort to offer the best product possible, we reserve the right to change, without notice, specifications or materials that in our opinion will not alter the function of the product. Specification sheets found at www.selux.us are the most recent versions and supercede all other printed or electronic versions.

selux

SACL-1-XX-DS

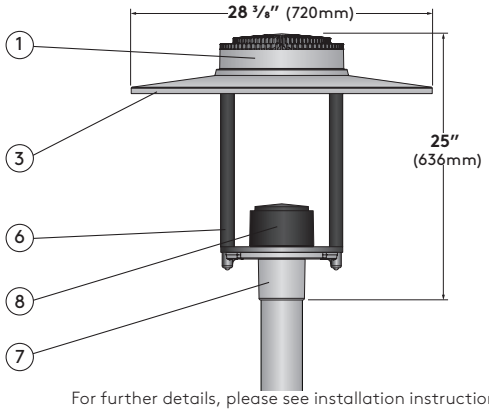

For further details, please see installation instructions.

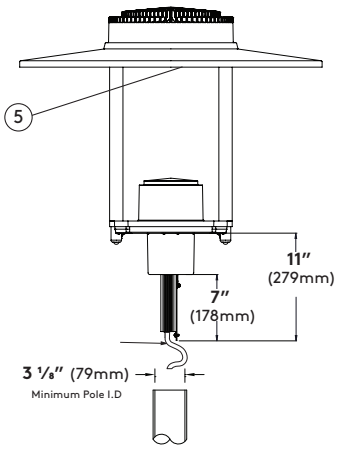

Specifications

1. Luminaire Cover - Die cast aluminum cover made from low copper alloy, designed to ensure optimal thermal management for extra long life time of LED light engine.

2. Gasketing - (not shown) Continuous gasket provides weatherproofing, dust and insect control at all fixture connections.

3. Luminaire Hood - Aluminum shade with white painted interior.

4. LED Array - (not shown) High flux LEDs mounted to PC boards and attached to aluminum heat sink for maximum LED performance and life. CCT tolerance ¼ step binning for 3000K, and 4000K. CRI minimum 80. Complete light engine can be removed easily for future upgrade. LED light engine provides a reported lumen maintenance of 93% at 50,000 hours. L70 calculated greater than 100,000 hours.

5. LED Optics - Technical Optics (R1, R2, R3, R3W, R4, R5S, R5Q and R5R) use Selux signature light pattern acrylic lens holder to secure proprietary silicone optics. Internal micro house side shield available for distributions types I, II, III & IV.

6. LED Driver - (not shown) LEDs are driven by RoHS compliant constant current programmable LED driver. Driver includes 0-10V dimming to 10%, meets the requirements of IP66. Driver assembly located inside the head.

7. Hood Supports - Two aluminum arms support shade and optic assembly and attach to the die cast aluminum pole fitter (shown painted matte black for DS option).

8. Pole Fitter - Self-leveling, die-cast low-copper aluminum alloy, fitter base secured to pole with three, stainless steel, Allen head set screws. Fitter for 3 ½" (90mm) O.D. poles.

9. Driver cover - Die cast aluminum cover made from low copper alloy, removes for tool-less access to driver. Driver secured to removable tray for ease of maintenance (shown painted matte black for DS option).

10. Surge Protector - (not shown) Designed to protect luminaire from electrical surge (20kA).

11. Power Cord - (not shown) Pre-installed at factory. Please specify power cord length in accordance to height of the pole. Add 2 feet to power cord length if double mounting (2) is specified.

Exterior Luminaire Finish - Selux utilizes a high quality Polyester Powder Coating. All Selux luminaires and poles are finished in our Tiger Drylac certified facility and undergo a five stage intensive pretreatment process where product is thoroughly cleaned, phosphated and sealed. Selux powder coated products provide excellent salt and humidity resistance as well as ultraviolet resistance for color retention. All products are tested in accordance with test specifications for coatings from ASTM and PCI.

Standard exterior colors are White (WH), Black (BK), Semi-Matte Black (BL), Bronze (BZ), and Silver (SV). Selux premium colors (SP) are available, please specify from your Selux color selection guide.

5 Year Limited LED Luminaire Warranty - Selux offers a 5 Year Limited Warranty to the original purchaser that the Saturn Cutoff LED luminaire shall be free from defects in material and workmanship for up to five (5) years from date of shipment. This limited warranty covers the LED driver and LED array when installed and operated according to Selux instructions. For details, see "Selux Terms and Condition of Sale."

Listings and Ratings: Luminaire and LED tested to IP65 and IESNA LM-79-08 standards. LED tested to LM-80 standards. Luminaire and LED tested at 25°C ambient temperature.

Luminaire suitable for ambient temperature of 45°C. Minimum operating temperature of luminaire at -40°C (-40°F)

NRTL Listed (i.e. UL, CSA)

Visit selux.us for our LED End of Life recycling policy.

For Buy American compliance on poles, please consult the factory.

Selux Corporation © 2022, T 845-834-1400, 800-735-8927, F 845-834-1401, www.selux.us
In a continuing effort to offer the best product possible, we reserve the right to change, without notice, specifications or materials that in our opinion will not alter the function of the product. Specification sheets found at www.selux.us are the most recent versions and supercede all other printed or electronic versions.

Mounting

Single (1)
Die-cast aluminum fitter base secured to pole with three stainless steel, Allen head set screws.

EPA = 1.3ft² (0.12m²)
Weight = 39lbs. (17.7kg)

Single Arm Mount (1A)
Die-cast aluminum single luminaire mounting arm secured to pole with four stainless steel, Allen head set screws. Outer slip fitter for 3½" O.D. tenon.

EPA = 2.3ft² (0.21m²)
Weight = 53lbs. (24.0kg)

Double (2)
Die-cast aluminum double luminaire mounting arm secured to pole with four stainless steel, Allen head set screws. Outer slip fitter for 3½" O.D. tenon.

EPA = 4.2ft² (0.39m²)
Weight = 100lbs. (45.3kg)

Wall (W)
Die-cast aluminum double round wall mount arm. Secured to wall with ¼" diameter threaded fasteners (by others).

EPA = 2.1ft² (0.20m²)
Weight = 50lbs. (22.7kg)

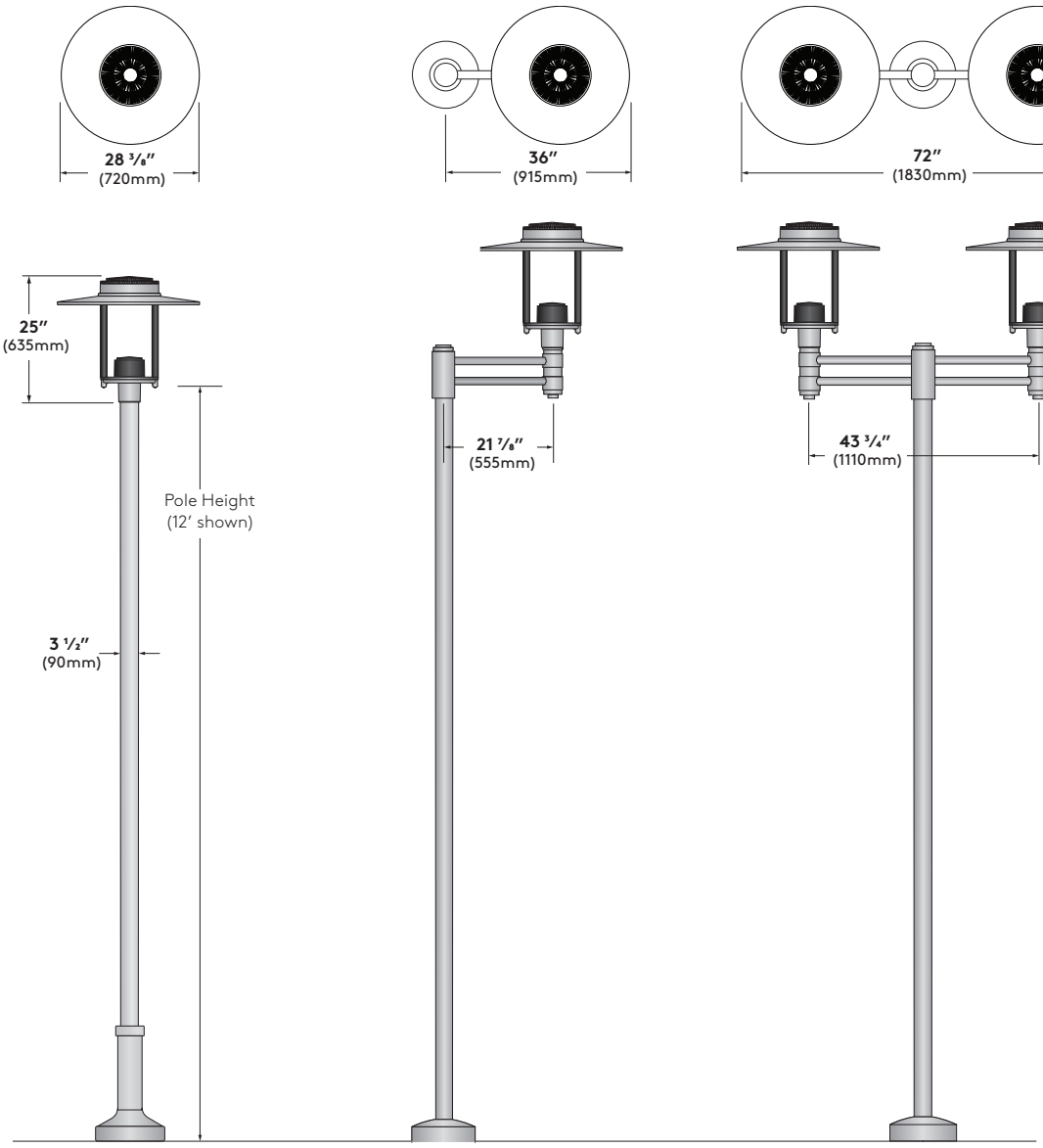

Wall Arm Mounting Detail
(Conduit and mounting hardware by others).

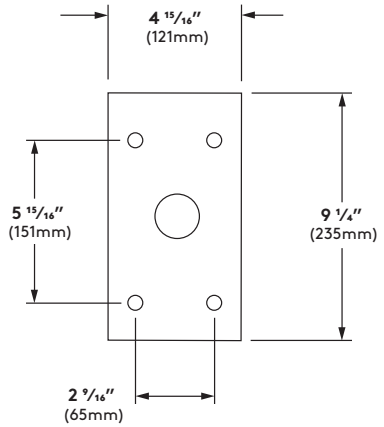

Pole Information

Refer to pole specification sheets for construction details, anchorage information and additional options.

A35 & S35
Round Straight Aluminum
& Round Straight Steel Poles

S635
Round Stepped Steel Poles

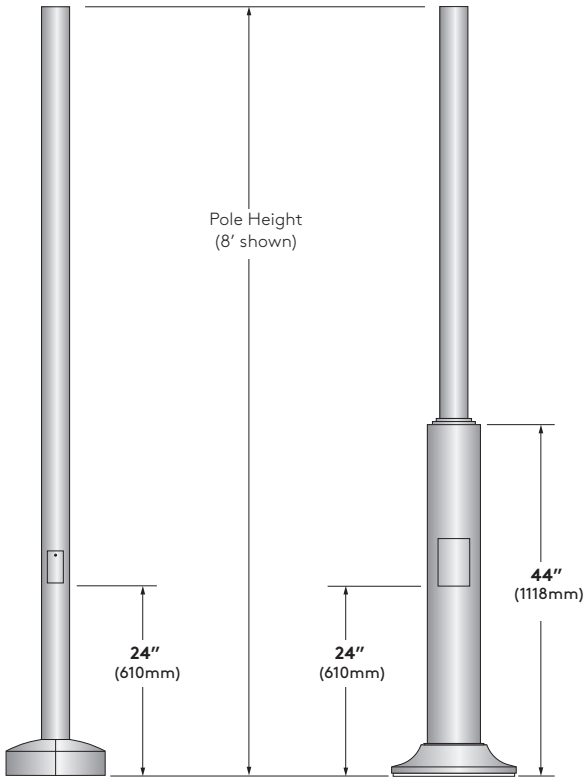

Shown with standard base covers.

Base Cover Information

Refer to pole specification sheets for construction details, anchorage information and additional options.

Standard Base Cover (BC5)
Supplied with A35 and S35
Two-piece cast aluminum

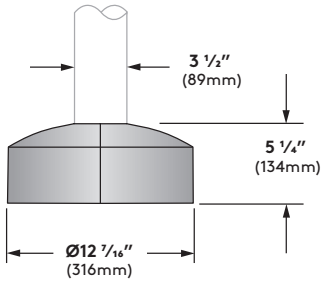

Standard Base Cover (BC6)
Supplied with S635
One-piece cast aluminum

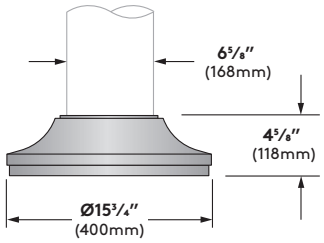

Pole Data Chart

VERIFY

Pole Series	Bolt Circle	EPA Information					Height	Finish	Options
		70mph	80mph	90mph	100mph	110mph			
S635 3 ½" Diameter Stepped Steel Pole	Ø9"	57.6	44.3	34.6	27.5	22.8	**8** 8ft.	**WH** White	**BC5** Standard base cover supplied with A35 and S35 poles.
A35 3 ½" Diameter Straight Aluminum Pole	Ø7 ¾"	16.1	12.2	9.4	7.3	5.9		**BK** Black	**BC6** Standard base cover supplied with S635 poles.
S35 3 ½" Diameter Straight Steel Pole	Ø7 ¾"	14.8	11.3	8.6	6.7	5.4		**BL** Semi-Matte Black	**REC** GFCI Receptacle with weatherproof cover.
S635 3 ½" Diameter Stepped Steel Pole	Ø9"	45.6	35.0	27.3	21.6	17.8	**10** 10 ft.	**BZ** Bronze	**REC2** GFCI Receptacle with padlockable in-use cover.
A35 3 ½" Diameter Straight Aluminum Pole	Ø7 ¾"	12.4	9.3	7.1	5.4	4.3		**SV** Silver	**REC3** USB and Duplex Receptacle with weatherproof cover.
S35 3 ½" Diameter Straight Steel Pole	Ø7 ¾"	11.4	8.6	6.5	4.9	3.9		**SP** Specify Premium Color	**REC4** USB and Duplex Receptacle with weatherproof padlockable in-use cover.
S635 3 ½" Diameter Stepped Steel Pole	Ø9"	37.6	28.7	22.3	17.5	14.4	**12** 12 ft.		**MS** Motion Sensor with Optional Photocell (Meets Title 24 Requirements).
A35 3 ½" Diameter Straight Aluminum Pole	Ø7 ¾"	9.9	7.3	5.4	4.0	3.1			
S35 3 ½" Diameter Straight Steel Pole	Ø7 ¾"	9.1	6.7	4.9	3.6	2.8			
S635 3 ½" Diameter Stepped Steel Pole	Ø9"	31.7	24.2	18.6	14.6	11.9			
A35 3 ½" Diameter Straight Aluminum Pole	Ø7 ¾"	8.0	5.8	4.2	3.0	2.2	**14** 14 ft.		
S35 3 ½" Diameter Straight Steel Pole	Ø7 ¾"	7.3	5.3	3.8	2.7	1.9			
S635 3 ½" Diameter Stepped Steel Pole	Ø9"	21.7	15.8	12.3	9.6	7.6			
A35 3 ½" Diameter Straight Aluminum Pole	Ø7 ¾"	4.9	3.2	2.2	1.4	N/A	**16** 16 ft.		
S35 3 ½" Diameter Straight Steel Pole	Ø7 ¾"	4.4	2.8	1.9	N/A	N/A			

In a continuing effort to offer the best product possible, we reserve the right to change, without notice, specifications or materials that in our opinion will not alter the function of the product. Specification sheets found at www.selux.us are the most recent versions and supercede all other printed or electronic versions.

Bolt Circle for A35 & S35

Use caution when setting anchor bolts. Bolts must be vertically straight and centered on dimensions shown

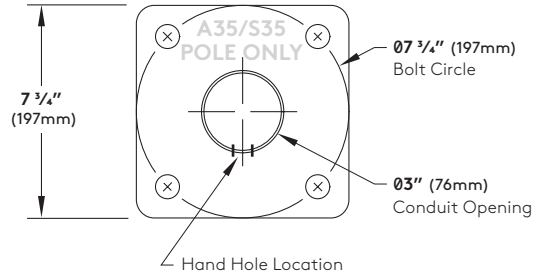

Note: Adequate drainage must be provided in concrete foundation.

Anchor Bolt Detail for A35 & S35

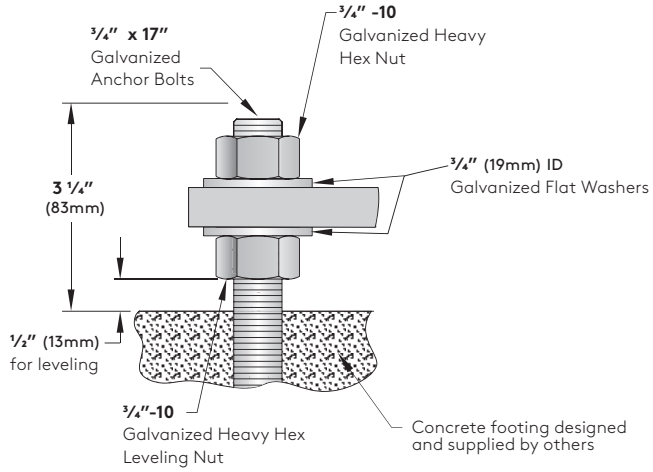

Bolt Circle for S635

Use caution when setting anchor bolts. Bolts must be vertically straight and centered on dimensions shown.

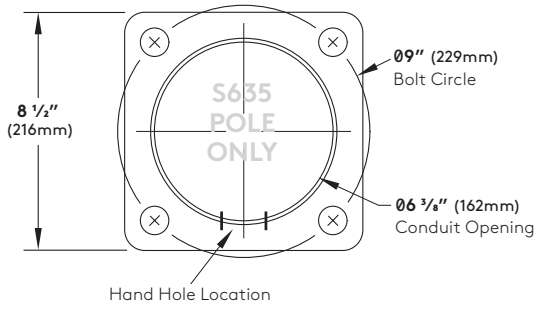

Note: Adequate drainage must be provided in concrete foundation.

Anchor Bolt Detail for S635

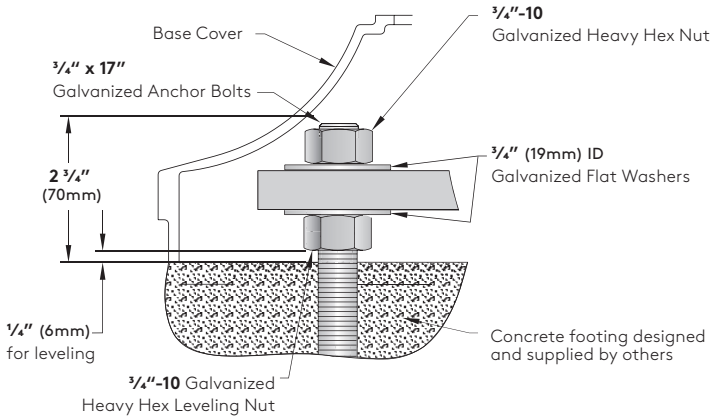

Round Pole Motion Sensor

The Selux outdoor rated sensor incorporates Passive Infrared (PIR) Technology for motion sensing and also includes built-in photocell.
Sensor comes pre-installed in cast aluminum housing painted to match pole finish.

Series	Hand Hole Orientation	Dim Level	Photocell Feature	Voltage
MS Motion Sensor	**00** 0° Clockwise from Hand Hole **09** 90° Clockwise from Hand Hole **18** 180° Clockwise from Hand Hole **27** 270° Clockwise from Hand Hole	**D0** (Off) **D1** (1V=10%) **D3** (3V=30%) **D5** (5V=50%)	**Y** Yes **N** No	**UNV** (100-347VAC single phase or 208/230/480VAC phase-to-phase)

Factory Defaults:

Delay to Dim: 5 minutes
Delay to Off: 1 hour
Sensitivity: Max
Custom Programming: Consult Factory

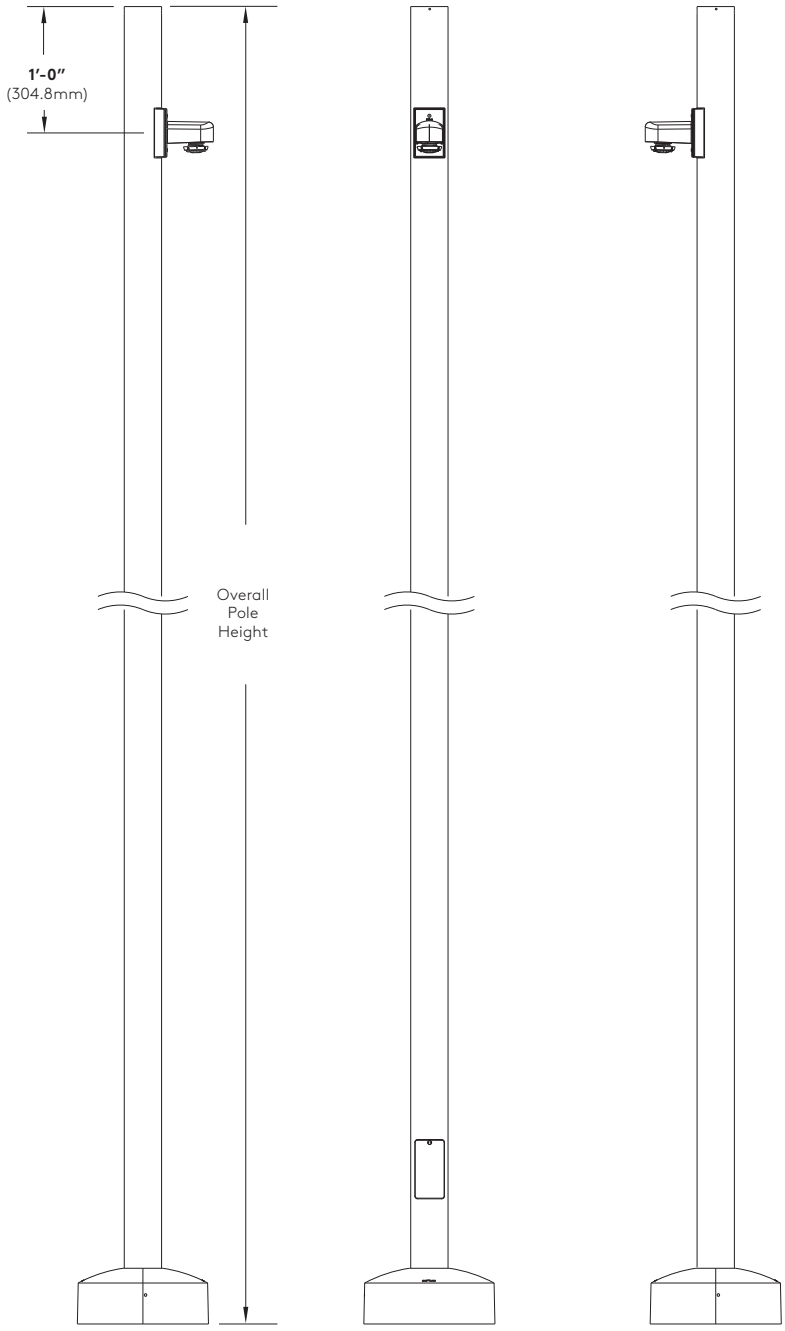

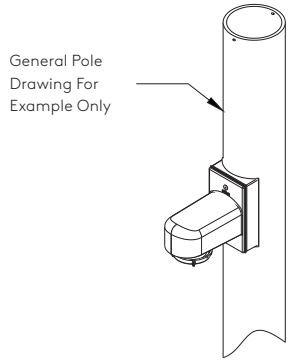

Sensor angular orientation from hand hole 0°
90° increments clockwise around pole (Type 00, 09, 18, 27)

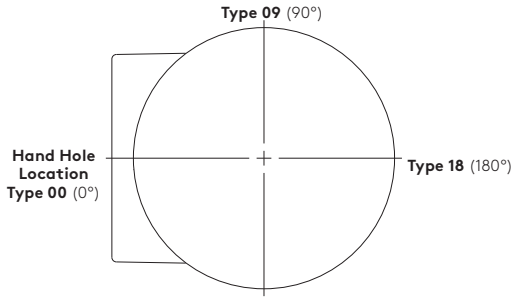

Top View

Motion Sensor Features

- Customize programming using smartphone application (Refer to the FSP-321 at www.wattstopper.com)
- 5 Year Warranty
- 100% Digital PIR Detection, excellent RF Immunity
- 270° coverage pattern
- IP66 Rated for outdoor applications
- Made for LED light source
- Adjustable time delays, max/min dim levels, and ramp rates
- Suitable for Title 24 applications

(For coverage details refer to wattstopper FSP-321 spec sheet at www.wattstopper.com)

Selux Corporation © 2022, T 845-834-1400, 800-735-8927, F 845-834-1401, www.selux.us
In a continuing effort to offer the best product possible, we reserve the right to change, without notice, specifications or materials that in our opinion will not alter the function of the product. Specification sheets found at www.selux.us are the most recent versions and supercede all other printed or electronic versions.

Wiring Diagrams

Standard Wiring (120V-277V)
**When dimming is not required cap dimming wires.

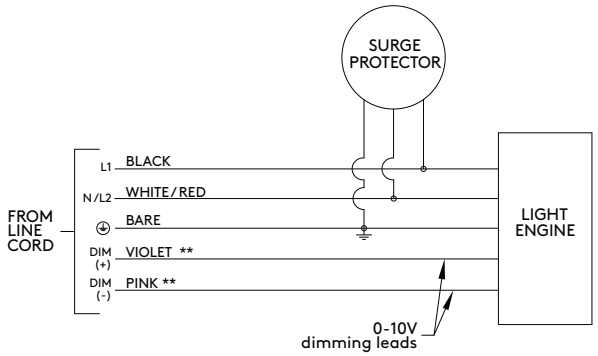

Standard Wiring (347/480V with Step-down Transformer)
**When dimming is not required cap dimming wires.

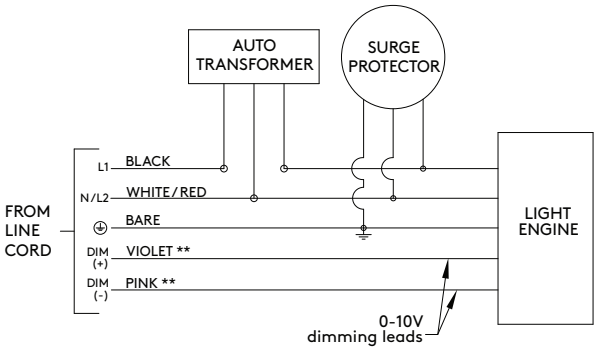

Hi-Lo Switching Option (HL) Wiring HL30 & HL50 Only
120V, 240V, 277V. When blue is energized, light output will be at "Lo" level. Specify low-level by using one of the 2 levels listed below (i.e. HL30 or HL50). For other combinations, consult factory

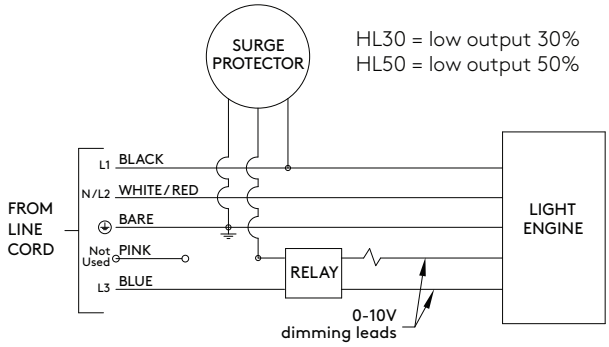

Photocell Option (PCT) Wiring
**When dimming is not required cap dimming wires.

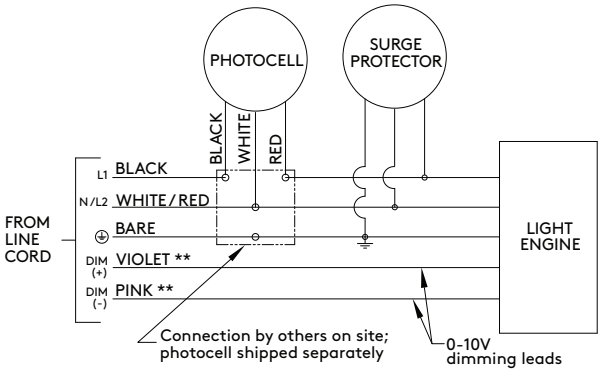

Motion Sensor Option (MS) Wiring (120-480V)

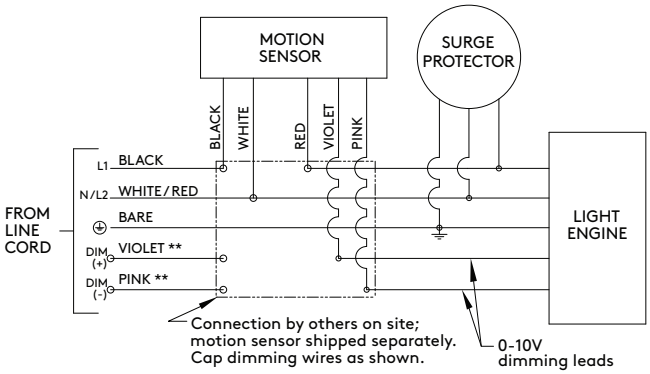

Wire Designation Table		
Source Voltage (VAC)	**Wire Color**	**Wire Designation**
120V, 277V, or 347V	Black	L1
	White	Neutral
208V, 240V, or 480V	Black	L1
	Red	L2
UNV (120V-277V)	Black	L1
	White	Neutral (120/277V) or L2 (208/240V)

Selux Corporation © 2022, T 845-834-1400, 800-735-8927, F 845-834-1401, www.selux.us
In a continuing effort to offer the best product possible, we reserve the right to change, without notice, specifications or materials that in our opinion will not alter the function of the product. Specification sheets found at www.selux.us are the most recent versions and supercede all other printed or electronic versions.

Optional Accessories

Photo Cell Tenon (PCT) - Button type photocell mounted in cast aluminum pole top tenon. Tenon has integral cast visor to prevent false start/stop cycle and can be oriented for optimum performance. Refer to luminaire spec sheet to determine if this option is applicable.

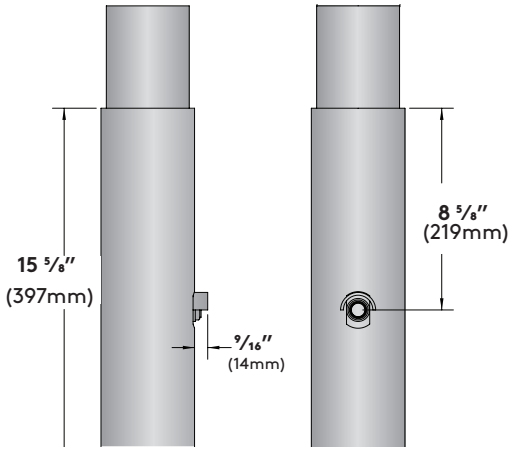

REC and REC3

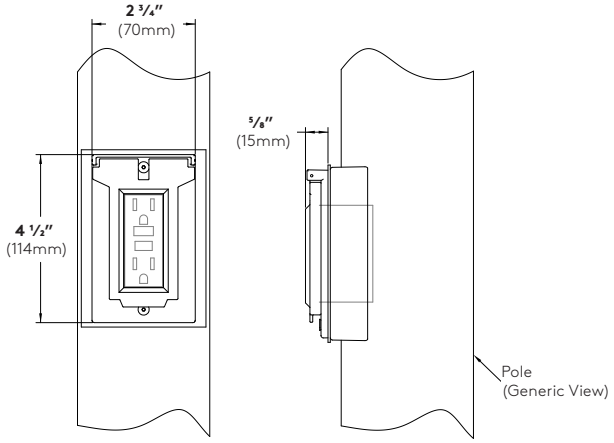

Cover shown in the closed position

REC2 and REC4

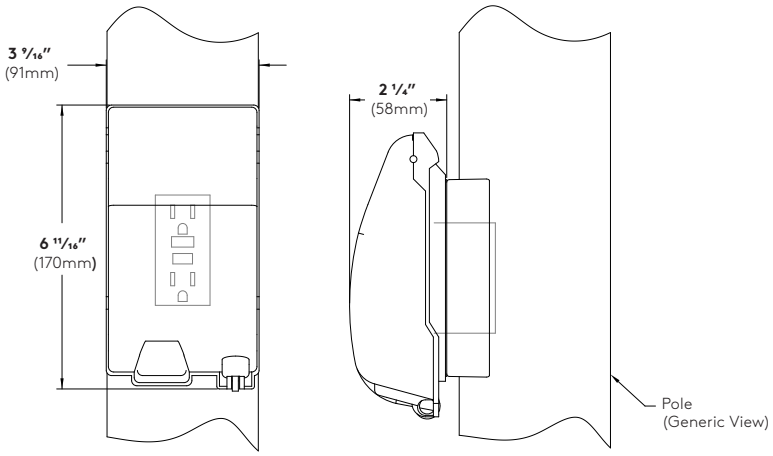

Cover shown in the closed position

GFCI Receptacle (REC) - 120V 15A GFCI duplex receptacle with weatherproof, self-closing cover; located 36" (915mm) o.c. from base of pole, in-line with hand hole. Receptacle is intended only for portable tools or other portable equipment to be connected to outlet only when attended by operating personnel (120V only).

USB & Duplex Receptacle (REC3) (not shown) - 120V 20A duplex receptacle with USB combination ports. (1) type A and (1) type C high power 5A, 5V USB outlets. With weatherproof, self-closing cover; located 36" (915mm) o.c. from base of pole, in-line with hand hole. Receptacle is intended only for portable tools or other portable equipment to be connected to outlet only when attended by operating personnel.

REC3 does not incorporate GFCI (Ground Fault Circuit Interrupter) protection, and shall be powered by a GFCI protected branch circuit (by others).

GFCI Receptacle (REC2) - 120V 15A GFCI duplex receptacle with weatherproof, self-closing, padlockable in-use cover; located 36" (915mm) o.c. from base of pole, in-line with hand hole. Receptacle is intended only for portable tools or other portable equipment to be connected to outlet only when attended by operating personnel (120V only).

USB & Duplex Receptacle (REC4) (not shown) - 120V 20A duplex receptacle with USB combination ports. (1) type A and (1) type C high power 5A, 5V USB outlets. With weatherproof, self-closing padlockable in-use cover; located 36" (915mm) o.c. from base of pole, in-line with hand hole. Receptacle is intended only for portable tools or other portable equipment to be connected to outlet only when attended by operating personnel.

REC4 does not incorporate GFCI (Ground Fault Circuit Interrupter) protection, and shall be powered by a GFCI protected branch circuit (by others).

Selux Corporation © 2022, T 845-834-1400, 800-735-8927, F 845-834-1401, www.selux.us
In a continuing effort to offer the best product possible, we reserve the right to change, without notice, specifications or materials that in our opinion will not alter the function of the product. Specification sheets found at www.selux.us are the most recent versions and supercede all other printed or electronic versions.

R1 Optics / 39W / 3000K CCT

Catalog #: SACL-R1-5G450-30
Delivered Lumens: 4442
Efficacy: 114lm/W
Maximum candela of 2420.7 at 45° from vertical.
IES classification - Type II
Mounting Height = 16'
B1-U0-G1

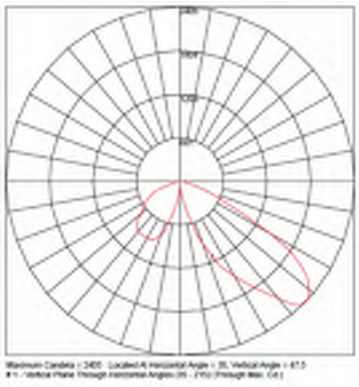

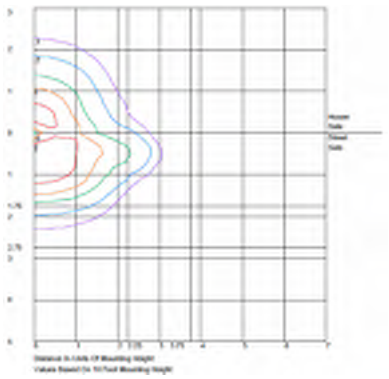

R1 Optics with HS / 39W / 3000K CCT

Catalog #: SACL-R1-5G450-30-HS
Delivered Lumens: 2990
Efficacy: 77lm/W
Maximum candela of 2170.5 at 45 ° from vertical.
IES classification - Type II
Mounting Height = 16'
B0-U0-G1

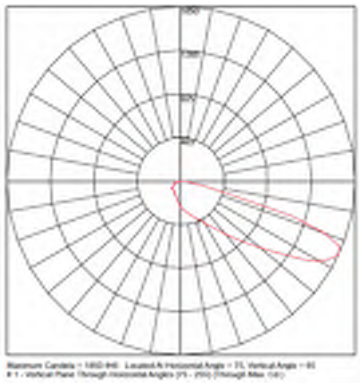

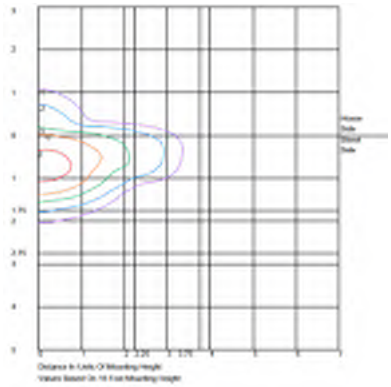

R2 Optics / 39W / 3000K CCT

Catalog #: SACL-R2-5G450-30
Delivered Lumens: 4366
Efficacy: 112lm/W
Maximum candela of 2166.5 at 65° from vertical.
IES classification - Type III
Mounting Height = 16'
B1-U0-G1

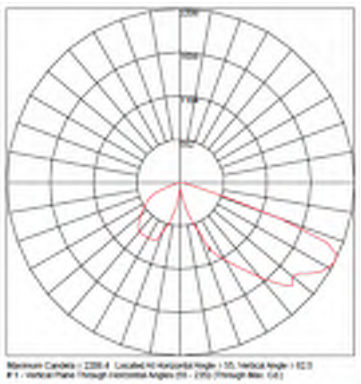

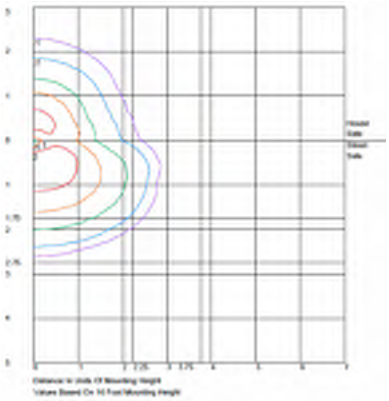

Photometry

R3 Optics / 39W / 3000K CCT

Catalog #: SACL-R3-5G450-30
Delivered Lumens: 4357
Efficacy: 112lm/W
Maximum candela of 2759.1 at 60° from vertical.
IES classification - Type III
Mounting Height = 16'
B1-U0-G1

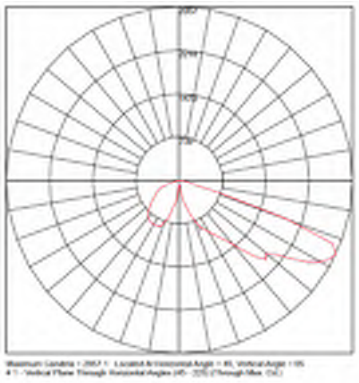

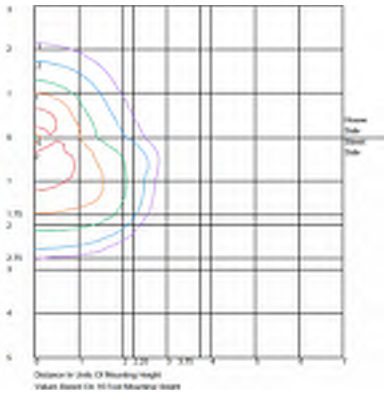

R3W Optics / 39W / 3000K CCT

Catalog #: SACL-R3W-5G450-30
Delivered Lumens: 4446
Efficacy: 114lm/W
Maximum candela of 1988 at 67.5° from vertical.
IES classification - Type III
Mounting Height = 16'
B2-U0-G1

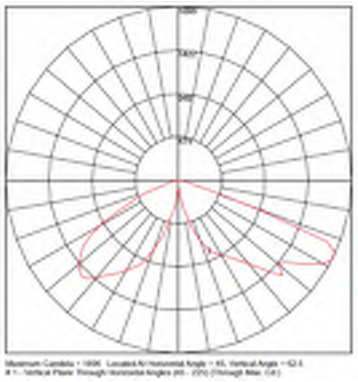

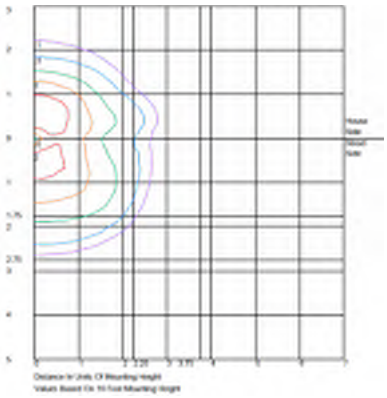

R4 Optics / 39W / 3000K CCT

Catalog #: SACL-R4-5G450-30
Delivered Lumens: 4440
Efficacy: 114lm/W
Maximum candela of 2808.6 at 65° from vertical.
IES classification - Type III
Mounting Height = 16'
B1-U0-G1

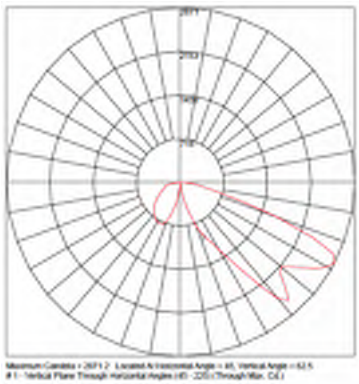

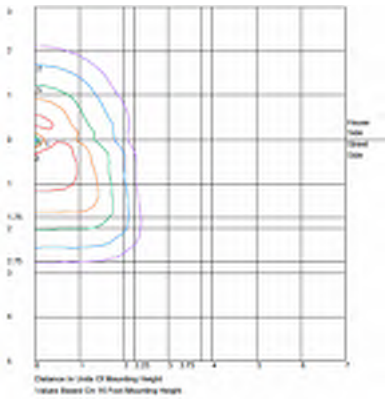

Selux Corporation © 2022, T 845-834-1400, 800-735-8927, F 845-834-1401, www.selux.us
In a continuing effort to offer the best product possible, we reserve the right to change, without notice, specifications or materials that in our opinion will not alter the function of the product. Specification sheets found at www.selux.us are the most recent versions and supercede all other printed or electronic versions.

Photometry

R5R Optics / 39W / 3000K CCT

Catalog #: SACL-R5R-5G450-30
Delivered Lumens: 4548
Efficacy: 117lm/W
Maximum candela of 1849.9 at 65° from vertical.
IES classification - N/A
Mounting Height = 16'
B2-U0-G2

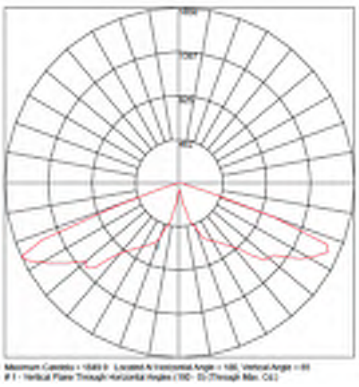

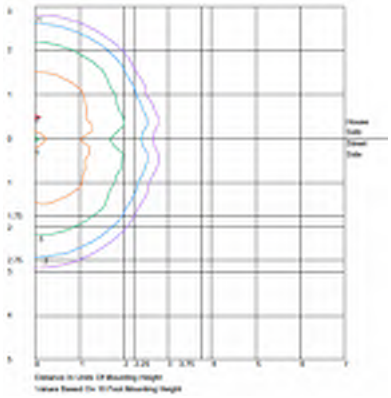

R5S Optics / 39W / 3000K CCT

Catalog #: SACL-R5S-5G450-30
Delivered Lumens: 4552
Efficacy: 117lm/W
Maximum candela of 1836.3 at 65° from vertical.
IES classification - Type III
Mounting Height = 16'
B2-U0-G2

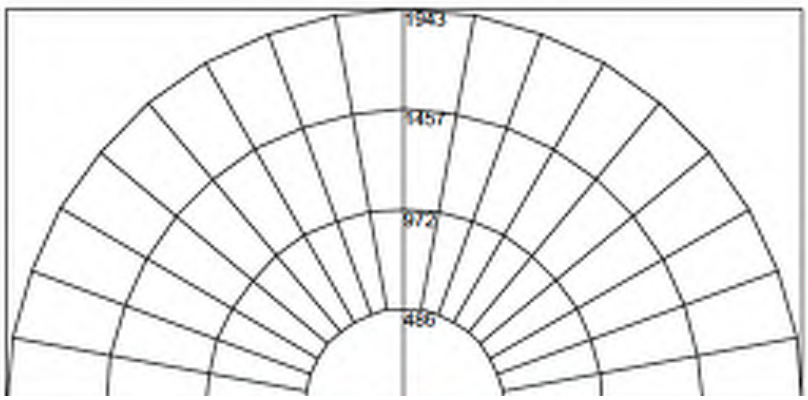

R5Q Optics / 39W / 3000K CCT

Catalog #: SACL-R5Q-5G450-30
Delivered Lumens: 4564
Efficacy: 117lm/W
Maximum candela of 1467.6 at 45° from vertical.
IES classification - N/A
Mounting Height = 16'
B2-U0-G2

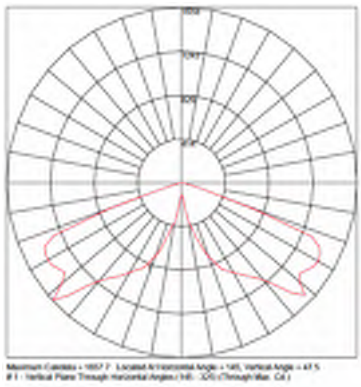

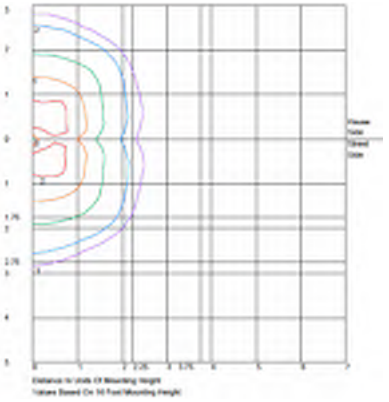

TM-21 LIFETIME CALCULATION						
Light Engine	Ambient Temp (°C)	Lumen Maintenance (% at hours)				Reported L_{70}
		25k[1]	50k[1]	75k[2]	100k[2]	
LG4500	25°C	99.8%	99.8%	99.8%	99.8%	L70(12k) > 70,000 hours
	40°C	99.8%	99.8%	99.8%	99.8%	L70(12k) > 70,000 hours
LG4150	25°C	99.8%	99.8%	99.8%	99.8%	L70(12k) > 70,000 hours
	40°C	99.8%	99.8%	99.8%	99.8%	L70(12k) > 70,000 hours
LG4150	25°C	99.8%	99.8%	99.8%	99.8%	L70(12k) > 70,000 hours
	40°C	99.8%	99.8%	99.8%	99.8%	L70(12k) > 70,000 hours

[1] Calculated in accordance with IESNA TM-21-11, projected values are within six times (6x) the IESNA LM-80-08 test duration
[2] Projected values are outside six times (6x) the IESNA LM-80-08 test duration

LEO Area Light

Specification Sheet

Project Name: _____ Job Location: _____

Fixture Type: L2-D Fixture Quantity: _____

Source	LED
Input Voltage	120V-277V
Frequency	50/60Hz
EPA	1.14 ft^2
Weight	40 lbs

LEO is finished with Pangard II®, offered exclusively by Landscape Forms, is a 19 step program of cleaning, priming, and powdercoating that resists rusting, chipping, peeling and fading to produce the finest metal finish available for site furniture and outdoor lighting. In addition, Pangard II® contains no heavy metals and is free of Hazardous Air Pollutants.

LEO Area Light							
_____	**Product**	LE330 (LEO 30 LED Area Light)	LE350 (LEO 50 LED Area Light)				
_____	**Distribution**	T2 (Type II)	T3 (Type III)	T4 (Type IV)			
_____	**Output**	LO (Low Output)	HO (High Output				
_____	**Lens**	CLR (Clear Lens)	FRS (Frosted Lens)				
_____	**Color Temperature**	30K (3000K)	35K (3500K)	40K (4000K)			
_____	**Input Voltage**	UV1 (120V-277V, 50/60Hz)					
_____	**Mounting**	4A (4"Ø Clamp - Single Arm)	4B (4"Ø Clamp - Double Arm)	5A (5"Ø Clamp - Single Arm)	5B (5"Ø Clamp - Double Arm)	6A (6"Ø Clamp - Single Arm)	6B (6"Ø Clamp - Double Arm)
_____	**Photo/Motion Sensor**	NMS (No Motion Sensor)	MS1 (With Motion Sensor)				
_____	**Powdercoat Color** *	BLACK					

Example: LE350 – T3 – HO – *CLR – 30K – UV1 – 6A – MS1 – Powdercoat Color* *

* Click here to view the powdercoat color options.

LEO Aluminum Pole					
_____	**Product**	LE (LEO Area Light)			
_____	**Pole Height**	12 (144 in)	16 (192 in)	20 (240 in)	25 (300 in)
_____	**Configuration**	A (Single / Double) *	S (Staggered) **		
_____	**Twist Lock**	NTW (No Twist Lock)	TW1 (With Twist Lock)		
_____	**Base Option**	NUT (Nut Covers)	CPT (Cover Plate)		
_____	**Powdercoat Color** ***	BLACK			

Example: LE – 25 – S – TW1 – NUT – Powdercoat Color ***

* Single or double luminaires available with this configuration.
** Available with 20 and 25 pole heights.
*** Click here to view the powdercoat color options.

Modifications

Don't see what you are looking for? Our goal is to partner with you as the designer to manufacture solutions needed for the space you are creating. We offer the option to modify our standard product to meet certain design specifications or needs. Common modifications can include GCFI outlets, custom RAL colors, banner arm(s) mounting, and custom pole heights. Contact your local Landscape Forms representative to learn more about these offerings.

Landscape Forms, Inc. | 800.521.2546 | F 269.381.3455 | 7800 E. Michigan Ave., Kalamazoo, MI 49048

Notes

Please send completed forms to your Landscape Forms representative or contact us at (800) 430-6209 with any questions.

Landscape Forms, Inc. | 800.521.2546 | F 269.381.3455 | 7800 E. Michigan Ave., Kalamazoo, MI 49048

LEO Area Light

Specification Sheet

Project Name: _____ Job Location: _____

Fixture Type: L2-S Fixture Quantity: _____

Source	LED
Input Voltage	120V-277V
Frequency	50/60Hz
EPA	1.14 ft^2
Weight	40 lbs

LEO is finished with Pangard II®, offered exclusively by Landscape Forms, is a 19 step program of cleaning, priming, and powdercoating that resists rusting, chipping, peeling and fading to produce the finest metal finish available for site furniture and outdoor lighting. In addition, Pangard II® contains no heavy metals and is free of Hazardous Air Pollutants.

LEO Area Light							
_____	**Product**	LE330 (LEO 30 LED Area Light)	LE350 (LEO 50 LED Area Light)				
_____	**Distribution**	T2 (Type II)	T3 (Type III)	T4 (Type IV)			
_____	**Output**	LO (Low Output)	HO (High Output)				
_____	**Lens**	CLR (Clear Lens)	FRS (Frosted Lens)				
_____	**Color Temperature**	30K (3000K)	35K (3500K)	40K (4000K)			
_____	**Input Voltage**	UV1 (120V-277V, 50/60Hz)					
_____	**Mounting**	4A (4"Ø Clamp - Single Arm)	4B (4"Ø Clamp - Double Arm)	5A (5"Ø Clamp - Single Arm)	5B (5"Ø Clamp - Double Arm)	6A (6"Ø Clamp - Single Arm)	6B (6"Ø Clamp - Double Arm)
_____	**Photo/Motion Sensor**	NMS (No Motion Sensor)	MS1 (With Motion Sensor)				
_____	**Powdercoat Color** *	BLACK					

Example: LE350 – T3 – HO – *CLR – 30K – UV1 – 6A – MS1 – Powdercoat Color* *

* Click here to view the powdercoat color options.

LEO Aluminum Pole					
_____	**Product**	LE (LEO Area Light)			
_____	**Pole Height**	12 (144 in)	16 (192 in)	20 (240 in)	25 (300 in)
_____	**Configuration**	A (Single / Double) *	S (Staggered) **		
_____	**Twist Lock**	NTW (No Twist Lock)	TW1 (With Twist Lock)		
_____	**Base Option**	NUT (Nut Covers)	CPT (Cover Plate)		
_____	**Powdercoat Color** ***	BLACK			

Example: LE – 25 – S – TW1 – NUT – Powdercoat Color ***

* Single or double luminaires available with this configuration.
** Available with 20 and 25 pole heights.
*** Click here to view the powdercoat color options.

Modifications

Don't see what you are looking for? Our goal is to partner with you as the designer to manufacture solutions needed for the space you are creating. We offer the option to modify our standard product to meet certain design specifications or needs. Common modifications can include GCFI outlets, custom RAL colors, banner arm(s) mounting, and custom pole heights. Contact your local Landscape Forms representative to learn more about these offerings.

Landscape Forms, Inc. | 800.521.2546 | F 269.381.3455 | 7800 E. Michigan Ave., Kalamazoo, MI 49048

Notes

Please send completed forms to your Landscape Forms representative or contact us at (800) 430-6209 with any questions.

Landscape Forms, Inc. | 800.521.2546 | F 269.381.3455 | 7800 E. Michigan Ave., Kalamazoo, MI 49048

Date: _____ Customer: _____

Project: _____

Type: L3 _____ Qty: _____

selux

Olivio Piccolo LED

Sistema 2 Arm Mount



Order Code:

	Fixture #	Series	Optics	Mounting	Light Engine	CCT	Finish	Voltage	Options
#1		OLPL							
#2		OLPL							
#3		OLPL							
#4		OLPL							

Pole Order Code: _____ - _____ - _____ - RN - _____ - __ - __ - __ - __ - __ - __ - __ - __

Series | Height | Finish | Rivnut Pairs | Options | *Rivnut Locations

*Refer to chart on page 5 for Rivnut locations

Fixture # __ __ __ __ __ __ __ __

OLPL	Series	OLPL Olivio Piccolo LED						
F40	Optics	S09 Spot, 11°	F40 Flood Medium, 45°	F80 Flood Wide, 74°				
F40	Mounting	SBx Specify Arm Locations (x = number of luminaires per pole)						
SBX	Light Engine	2G175 7W / 672lm	2G350 14W / 1346lm					* Based on S09 distribution and 3000K CCT.
2G350	CCT	27* 2700K	30[1] 3000K	35* 3500K	40 4000K	50* 5000K		[1] Dark Sky approved with (ds) option only. * Consult factory
30	Finish	WH White	BK Black	BL Semi-Matte Black	BZ Bronze	SV Silver	SP Specify Premium Color	
UNV	Voltage	UNV 120-277V	120 120V	208 208V	240 240V	277 277V		
DS	Options	DS[2] Dark Sky 0° Tilt Option	SLH Spread Lens Horizontal (fixed)	SLV Spread Lens Vertical (fixed)	PC Photocell (consult factory)	HX[3] Micro Hexcell Honeycomb Louver	CF Color Filter (consult factory)	[2] IDA approved with fixed mount (DS option) only and 3000K CCT. [3] Cannot be combined with SLH or SLV.

Product Modifications

Please list modification requirements for review by factory:

Approvals

Date:

BUY AMERICAN | NRTL WET | 5 YEAR LED WARRANTY | ASTM & PCI FINISH | RoHS | IP67 Luminaire | ida

OLPL-SB1

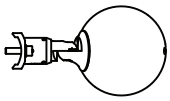

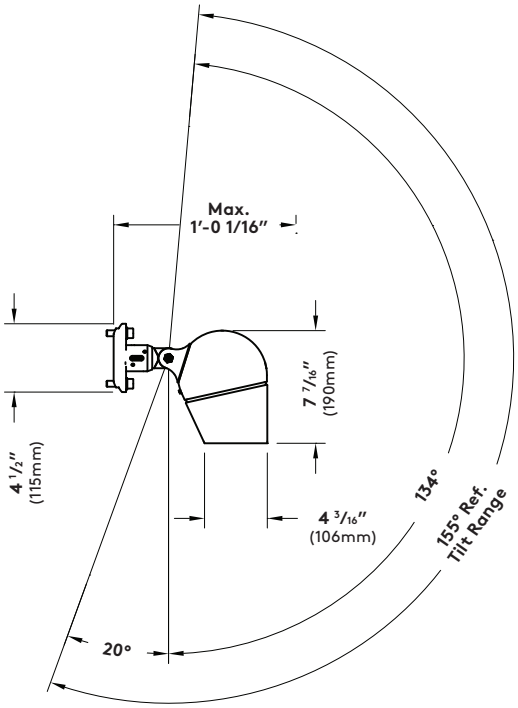

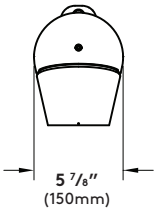

Specifications

Luminaire Housing - Two-piece high-pressure die-cast housing, made of low-copper aluminum alloy. Single recessed captive screw allows easy access to light engine & gear tray components.

Gasketing - UV and ozone-resistant, silicone gasket between fixture housing and lens base provide IP67 level ingress protection. IP rated micro-membrane ensures pressure compensation.

Lens - Tempered clear glass lens.

LED Light Engine - Made from high flux COB and vacuum metalized aluminum reflectors. Selux is using brand name LED manufacturers. Available in 3000K and 4000K, CRI minimum 80. Reflectors made from high purity aluminum to ensure high efficiencies throughout lifetime. Complete light engine can be removed easily for future upgrade. LED light engine provides a reported lumen maintenance of 82.69% at 60,000 hours. L70 calculated greater than 60,000 hours.

LED Driver - Selux uses brand name high efficiency LED drivers. LEDs are driven by RoHS compliant high-efficiency driver. Excellent for cold temperature starting and instant on. Min. operating temperature -30°C/ -22°F.

Arm - Cast aluminum mounting arms for flexible pole mounting. Fixture head joint provides tilt-swivel range from 0° to 175°, and 360° rotation. Locks down with set screws.

Rivnuts - (2) Two rivnuts per pole required per Fixture Arm.

Power Cord - Pre-installed at factory and hidden through the luminaire hinge and hinge arm. Power cords are specified to fit the length of the pole specified with the luminaire.

Exterior Luminaire Finish - Selux utilizes a high quality Polyester Powder Coating. All Selux luminaires and poles are finished in our Tiger Drylac certified facility and undergo a five-stage intensive pretreatment process where product is thoroughly cleaned, phosphated and sealed. Selux powder coated products provide excellent salt and humidity resistance as well as ultraviolet resistance for color retention. All products are tested in accordance with test specifications for coatings from ASTM and PCI. Standard exterior colors are White (WH), Black (BK), Bronze (BZ), Semi-Matte Black (BL), and Silver (SV). Selux premium colors (SP) are available, please specify from your Selux color selection guide.

5 Year Limited LED Luminaire Warranty - Selux offers a 5 Year Limited Warranty to the original purchaser that the Olivio Piccolo LED luminaire shall be free from defects in material and workmanship for up to five (5) years from date of shipment. This limited warranty covers the LED driver and LED array when installed and operated according to Selux instructions. Fixture suitable for ambient temperature of 35° C (95° F).

Listings and Ratings: Tested to IESNA LM-79-08 and LM-80 test standards at 25°C ambient temperature. IP67.

OLIVIO LED suitable for ambient temperatures of 35°C (95°F). Minimum operating temperature of luminaire at -30°C (-22°F).

NRTL Listed for wet location (i.e. UL, CSA)

Visit selux.us for our LED End of Life recycling policy.

For Buy American compliance on poles, please consult the factory.

Selux Corporation © 2022, T 845-834-1400, 800-735-8927, F 845-834-1401, www.selux.us
In a continuing effort to offer the best product possible, we reserve the right to change, without notice, specifications or materials that in our opinion will not alter the function of the product. Specification sheets found at www.selux.us are the most recent versions and supercede all other printed or electronic versions.

Mounting

Mounting Details

Single
(Arm Location: 0D)

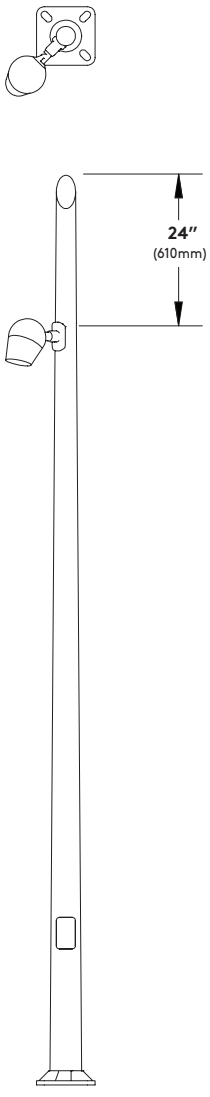

EPA = 0.2 ft² (0.019 m²)
Weight = 8 lbs. (4 kg)
Rivnuts = 1 pair (RN1)

Double at 90°
(Arm Locations: 0D-0V)

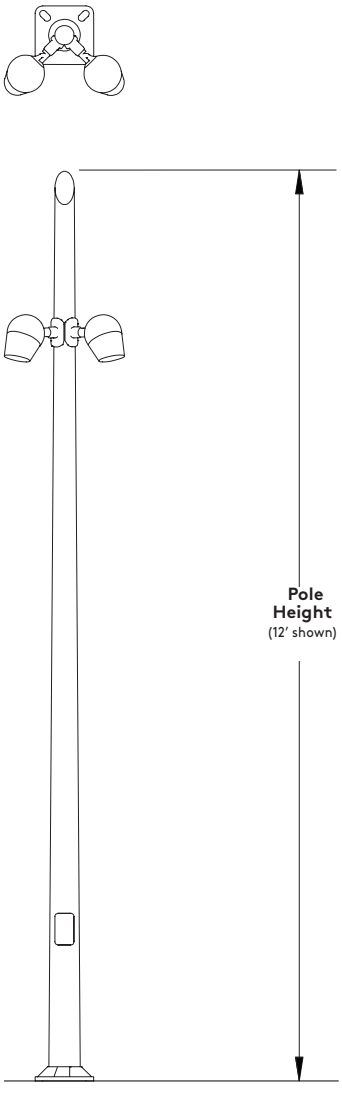

EPA = 0.5 ft² (0.050 m²)
Weight = 15 lbs. (7 kg)
Rivnuts = 2 pair (RN2)

Double at 180°
(Arm Locations: 0G-0S)

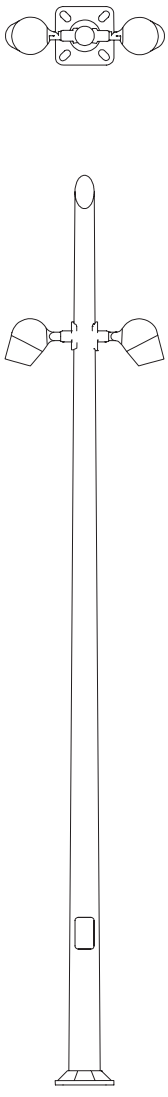

EPA = 0.5 ft² (0.050 m²)
Weight = 15 lbs. (7 kg)
Rivnuts = 2 pair (RN2)

Mounting

Mounting Details

Quadruple Pole Arms
stepped at 90°
(Arm Location: 0G-1M-2S-3A)

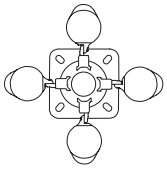

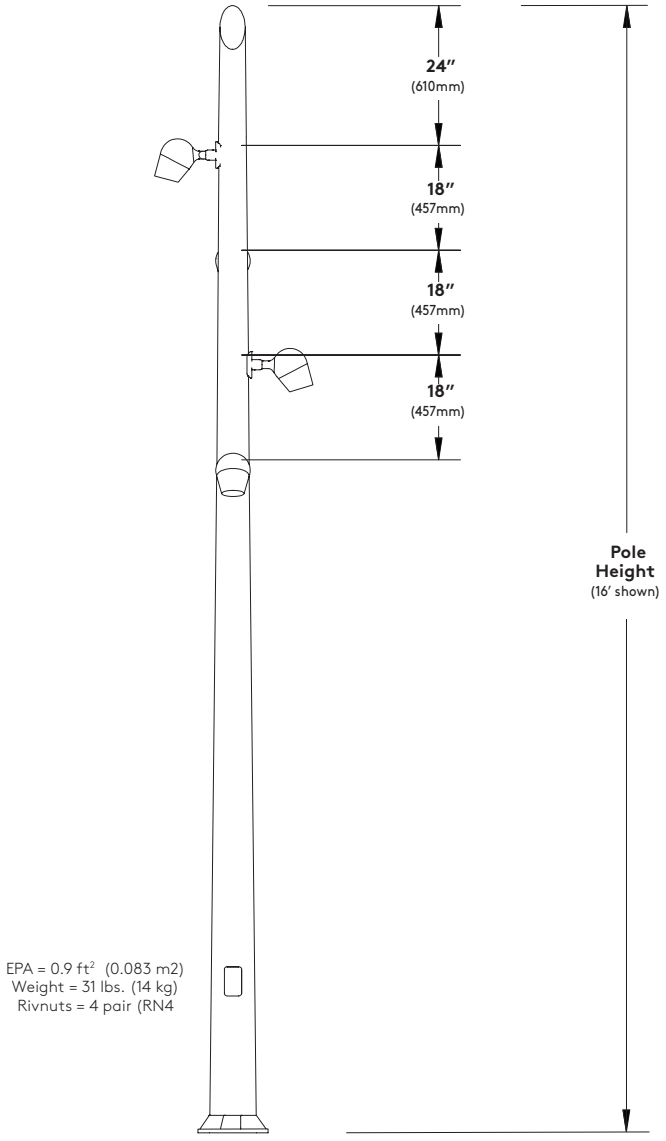

EPA = 0.9 ft² (0.083 m2)
Weight = 31 lbs. (14 kg)
Rivnuts = 4 pair (RN4

Sextuple Pole Arms
stepped at 60°
(Arm Locations: 0E-1I-2M-3Q-4U-5A)

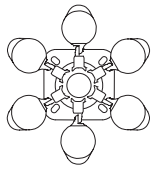

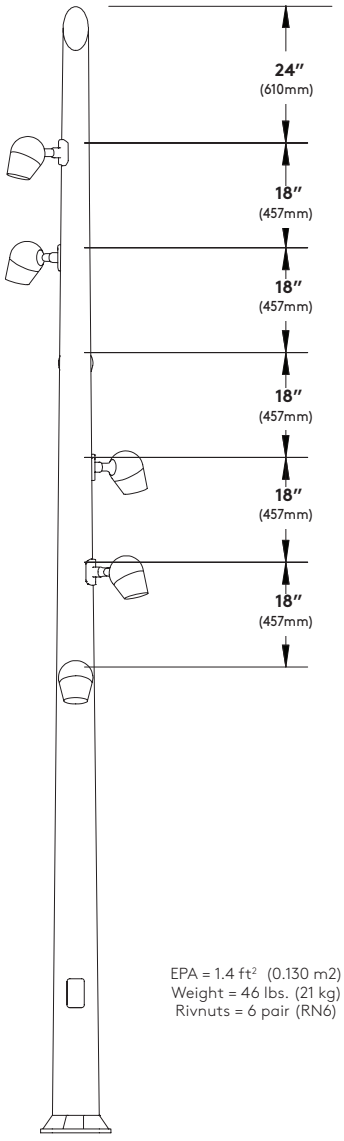

EPA = 1.4 ft² (0.130 m2)
Weight = 46 lbs. (21 kg)
Rivnuts = 6 pair (RN6)

Selux Corporation © 2022, T 845-834-1400, 800-735-8927, F 845-834-1401, www.selux.us
In a continuing effort to offer the best product possible, we reserve the right to change, without notice, specifications or materials that in our opinion will not alter the function of the product. Specification sheets found at www.selux.us are the most recent versions and supercede all other printed or electronic versions.

selux

Specify Mounting Configurations

(Luminaire shown for illustrative purposes only - not to scale)

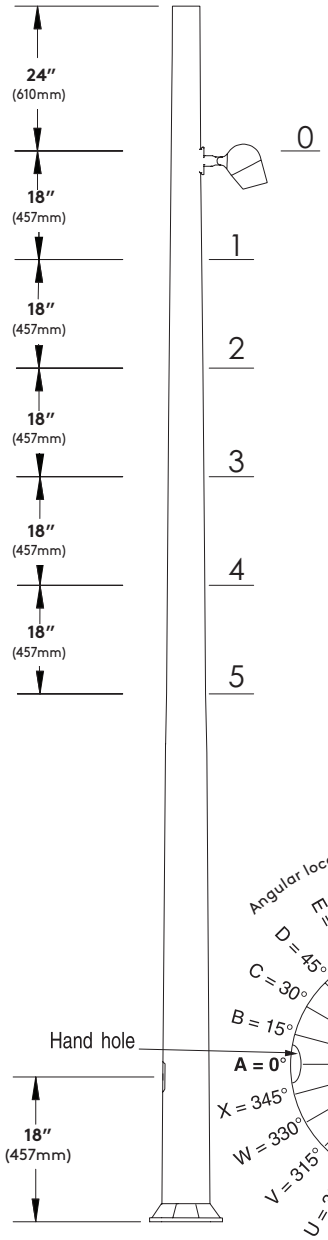

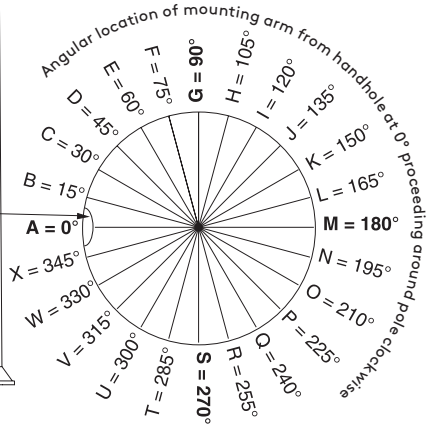

(NOTE: If using Adobe Acrobat to enter data (checks) in chart on right, the following instructions will be carried out automatically)

When specifying non-standard configurations, enter "SB+(total number of arms specified)" on configuration matrix on page 1 in the fixture Mounting field. Example: SB4 (specifying 4 mounting arms)

Build up the Mounting Arm Location Codes from chart on right ("Height Code" +"Angular Location Code") i.e. "4G" = 8 feet from top of pole, 90° clockwise from handhole.

Enter Mounting Arm Location Codes on page 1 in the blanks provided that follow the Pole Option blanks. Example: 3G-3P-4A-5S

(1) Pair of Rivnuts required per arm.

Use checkboxes provided in chart below. Columns #0 through #5 indicate heights starting with 2 feet (610mm) below top of pole and proceeding downwards in increments of 18 inches (457mm). Rows A through X indicate angular placement around pole starting with 0° at handhole and proceeding clockwise.

NOTE: Arms mounted at same height level must be spaced apart at 90° minimum. Arms mounted at adjacent height levels (18" apart) must be spaced apart at 45° minimum

HEIGHT CODE / DISTANCE FROM TOP OF POLE / CLOCKWISE FROM HANDHOLE / ANGULAR LOCATION CODE		0	1	2	3	4	5
		2′	3.5′	5′	6.5′	8′	9.5′
A	0°						
B	15°						
C	30°						
D	45°						
E	60°						
F	75°						
G	90°						
H	105°						
I	120°						
J	135°						
K	150°						
L	165°						
M	180°						
N	195°						
O	210°						
P	225°						
Q	240°						
R	255°						
S	270°						
T	285°						
U	300°						
V	315°						
W	330°						
X	345°						

Selux Corporation © 2022, T 845-834-1400, 800-735-8927, F 845-834-1401, www.selux.us
In a continuing effort to offer the best product possible, we reserve the right to change, without notice, specifications or materials that in our opinion will not alter the function of the product. Specification sheets found at www.selux.us are the most recent versions and supercede all other printed or electronic versions.

selux

A35 **Tapered Aluminum Pole**

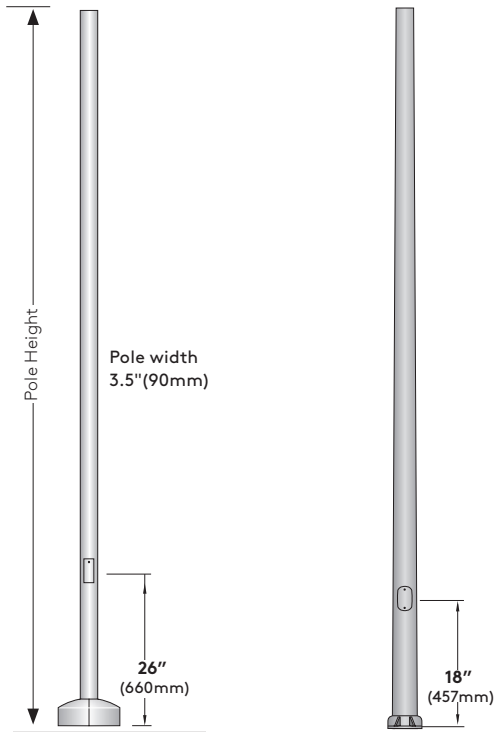

Optional Base Covers

Die cast aluminum, two piece field installable base covers

BC1
Available for:
O-A35-197

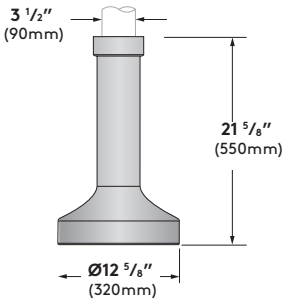

BC3 - Available for:
O-AT535-156

BC3 (AT535)

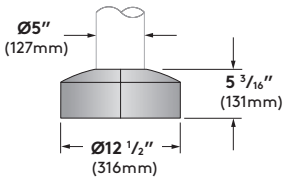

BC9 - Available for:
O-AT64-156
O-ST5936-11

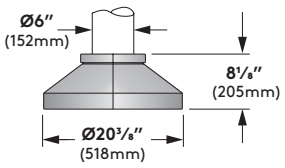

BC5 - Standard with:
O-A35-197

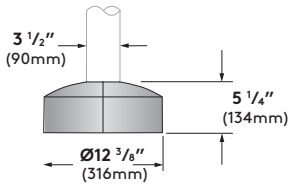

Pole Data Chart

Pole Series	Wall	EPA Information				Height	Finish	Rivnut Pairs	Options
		80mph	90mph	100mph	110mph				
O-A35-197 3.5" Straight Alum Pole	0.197	7.3	5.4	4	3.1	**12** 12 ft.	**WH** White **BK** Black **BZ** Bronze **SV** Silver **SP** Specify Premium Color	**RN1** 1 Pair **RN2** 2 Pair **RN3** 3 Pair **RN4** 4 Pair **RN5** 5 Pair **RN6** 6 Pair **RN7** 7 Pair **RN8** 8 Pair	**BC1** Decorative Cast Aluminum Base Cover (see base cover details for pole compatibility) **BC3** Die-cast, Two-piece Aluminum Base Cover (see base cover details for pole compatibility) **BC5** Two-piece Cast Aluminum Base Cover (see base cover details for pole compatibility) **BC9** Decorative Cast Aluminium Base Cover (see base cover details for pole compatibility) **REC** GFCI Receptacle with weatherproof cover **REC2** GFCI Receptacle with padlockable in-use cover **REC3** USB and Duplex Receptacle with weather proof cover **REC4** USB and Duplex Receptacle with weatherproof padlockable in-use cover **PC** Photocell (please consult factory; must be flat top pole; also specify with luminaire * Weatherproof cover intended for portable tools or other portable equipment connected to the outlet only when attended. For other requirements please consult factory.
O-AT535-156 5" to 3.5" Round Tapered Alum Pole	0.156	14.4	10.9	8.6	6.9				
O-A35-197 3.5" Round Straight Alum Pole	0.197	5.8	4.2	3.0	2.2	**14** 14 ft.			
O-AT535-156 5" to 3.5" Round Tapered Alum Pole	0.156	9.4	7.1	5.5	4.4				
O-AT535-156 5" to 3.5" Round Tapered Alum Pole	0.156	7.7	5.6	4.2	3.3	**16** 16 ft.			
O-AT64-156 6"-4" Round Tapered Alum Pole	0.156	14.1	10.8	8.6	7.0				
O-ST5936-11 5.9"-3.6" Tapered Steel Pole	11 ga	19.3	15.1	12.2	10.0				

EPA values are calculated according to AASHTO 1994 with a 1.3 gust factor. Poles are calculated for an even distributed weight load of 200 lbs weight maximum. If the majority of the load is unevenly distributed, please consult factory for project specific EPA calculations
(1) Pair of Rivnuts is required for every mounting arm in pole mount applications.
Rivnut codes are denoted in pairs (1 pair Rivnuts = RN1, 2 pair Rivnuts = RN2, 3 pair Rivnuts = RN3, etc) and must be specified for all pole mount configurations.

Selux Corporation © 2022, T 845-834-1400, 800-735-8927, F 845-834-1401, www.selux.us
In a continuing effort to offer the best product possible, we reserve the right to change, without notice, specifications or materials that in our opinion will not alter the function of the product. Specification sheets found at www.selux.us are the most recent versions and supercede all other printed or electronic versions.

Mounting Plate Detail

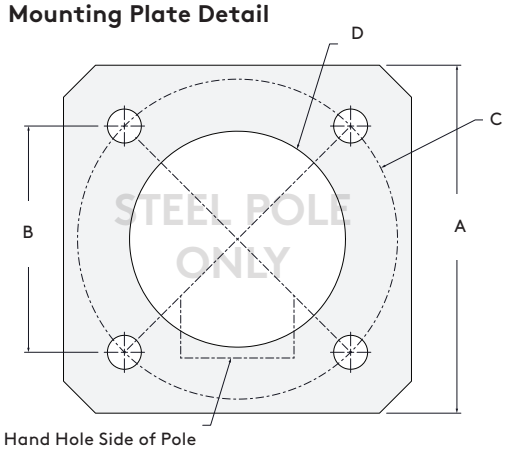

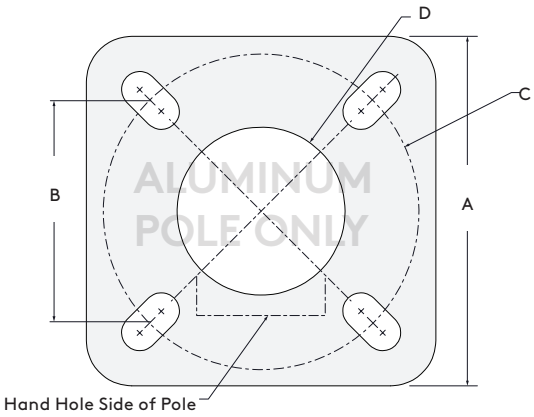

Mounting Plate Details	A Base Plate SQ	B Base Plate SQ	C Base Circle Ø	D Conduit Opening Ø
O-A35-197 3.5" Round Straight Alum Pole	8" (203mm)	5 ½" (139mm)	7 ¾" (197mm)	3" (76mm)
O-AT535-156 5" to 3.5" Round Tapered Alum Pole	9 ⅝" (244mm)	6 ⅛" (155mm)	8 ⅝" (219mm)	4 ⅝" (117mm)
O-AT535-188 5" to 3.5" Round Tapered Alum Pole	9 ⅝" (244mm)	6 ⅛" (155mm)	8 ⅝" (219mm)	4 ⅝" (117mm)
O-AT64-156 6"-4" Round Tapered Alum Pole	10 ⁵⁄₁₆" (262mm)	6 ¾" (171mm)	9 ½" (241mm)	5 ½" (140mm)
O-ST5936-11 5.9"-3.6" Tapered Steel Pole	10" (254mm)	6 ⅜" (162mm)	9" (229mm)	5 ⅝" (143mm)

Anchor Bolt Detail

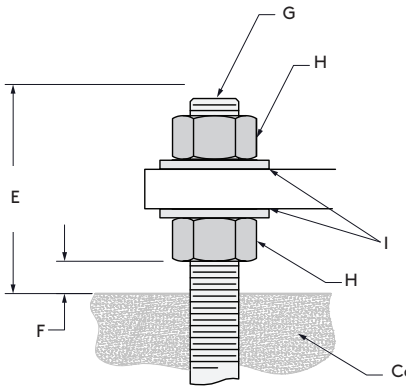

Use caution when setting anchor bolts. Bolts must be vertically straight and centered on dimension shown. Concrete footing and feed conduit to be designed and installed by others.

Individual 1:1 scale drawings for installation available, please consult factory.

All Hardware is Galvanized

Anchor Bolt Details	E Bolt Projection	F For Leveling	G Anchor Bolt	H Heavy Hex Nut	I Flat Washer
O-A35-197 3.5" Round Straight Alum Pole	3 ¼" (82mm)	½" (13mm)	¾"-10 UNC x 17"	¾"-10 UNC	¾" ID
O-AT535-156 5" to 3.5" Round Tapered Alum Pole	3 ¼" (82mm)	½" (13mm)	¾"-10 UNC x 17"	¾"-10 UNC	¾" ID
O-AT535-188 5" to 3.5" Round Tapered Alum Pole	3 ¼" (82mm)	½" (13mm)	¾"-10 UNC x 17"	¾"-10 UNC	¾" ID
O-ST5936-11 5.9"-3.6" Tapered Steel Pole	4 ⅛" (105mm)	½" (13mm)	1"-8 UNC x 36"	1"-8 UNC	1" ID
O-AT64-156 6"-4" Round Tapered Alum Pole	3 ½" (89mm)	½" (13mm)	¾"-10 UNC x 17"	¾"-10 UNC	¾" ID

Selux Corporation © 2022, T 845-834-1400, 800-735-8927, F 845-834-1401, www.selux.us
In a continuing effort to offer the best product possible, we reserve the right to change, without notice, specifications or materials that in our opinion will not alter the function of the product. Specification sheets found at www.selux.us are the most recent versions and supercede all other printed or electronic versions.

Wiring Diagram

Standard Wiring (120V-277V)

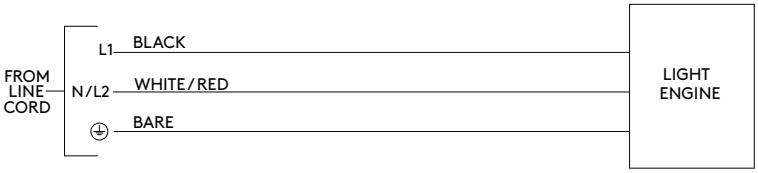

Wire Designation Table		
Source Voltage (VAC)	**Wire Color**	**Wire Designation**
120V or 277V	Black	L1
	White	Neutral
208V or 240V	Black	L1
	Red	L2
UNV (120V-277V)	Black	L1
	White	Neutral (120/277V) or L2 (208/240V)

Selux Corporation © 2022, T 845-834-1400, 800-735-8927, F 845-834-1401, www.selux.us
In a continuing effort to offer the best product possible, we reserve the right to change, without notice, specifications or materials that in our opinion will not alter the function of the product. Specification sheets found at www.selux.us are the most recent versions and supercede all other printed or electronic versions.

Optional Accessories

Dark Sky 0° Tilt Option (DS) -Luminaire head tilt angle preset and fixed at factory to comply with IDA Dark Sky and BUG U0 ratings. IDA Dark Sky compliant with 3000K CCT only.

REC and REC3

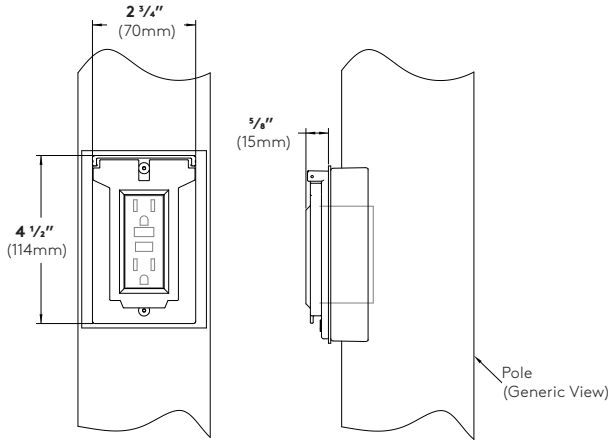

Cover shown in the closed position

REC2 and REC4

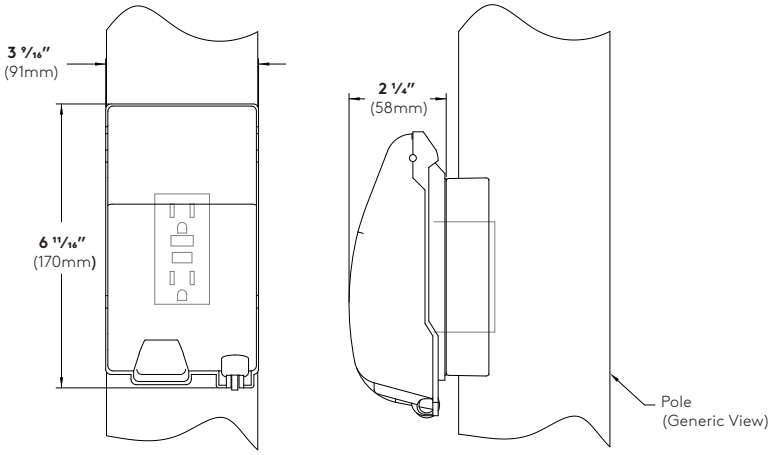

Cover shown in the closed position

GFCI Receptacle (REC) - 120V 15A GFCI duplex receptacle with weatherproof, self-closing cover; located 36" (915mm) o.c. from base of pole, in-line with hand hole. Receptacle is intended only for portable tools or other portable equipment to be connected to outlet only when attended by operating personnel (120V only).

USB & Duplex Receptacle (REC3) (not shown) - 120V 20A duplex receptacle with USB combination ports. (1) type A and (1) type C high power 5A, 5V USB outlets. With weatherproof, self-closing cover; located 36" (915mm) o.c. from base of pole, in-line with hand hole. Receptacle is intended only for portable tools or other portable equipment to be connected to outlet only when attended by operating personnel.

REC3 does not incorporate GFCI (Ground Fault Circuit Interrupter) protection, and shall be powered by a GFCI protected branch circuit (by others).

GFCI Receptacle (REC2) - 120V 15A GFCI duplex receptacle with weatherproof, self-closing, padlockable in-use cover; located 36" (915mm) o.c. from base of pole, in-line with hand hole. Receptacle is intended only for portable tools or other portable equipment to be connected to outlet only when attended by operating personnel (120V only).

USB & Duplex Receptacle (REC4) (not shown) - 120V 20A duplex receptacle with USB combination ports. (1) type A and (1) type C high power 5A, 5V USB outlets. With weatherproof, self-closing padlockable in-use cover; located 36" (915mm) o.c. from base of pole, in-line with hand hole. Receptacle is intended only for portable tools or other portable equipment to be connected to outlet only when attended by operating personnel.

REC4 does not incorporate GFCI (Ground Fault Circuit Interrupter) protection, and shall be powered by a GFCI protected branch circuit (by others).

Horizontal Spread Lens (SLH) - Spread lens for horizontal light distribution. Replaces clear lens and intended to be used with reflectors for S09, F40 or F80 distribution. Preset and fixed at factory.

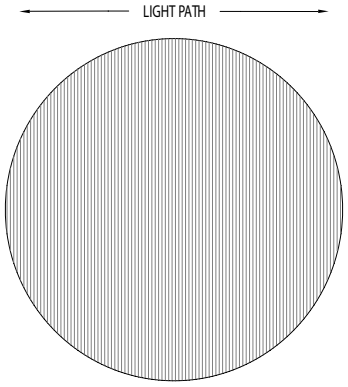

Vertical Spread Lens (SLV) - Spread lens for vertical light distribution. Replaces clear lens and intended to be used with reflectors for S09, F40 or F80 distribution. Preset and fixed at factory.

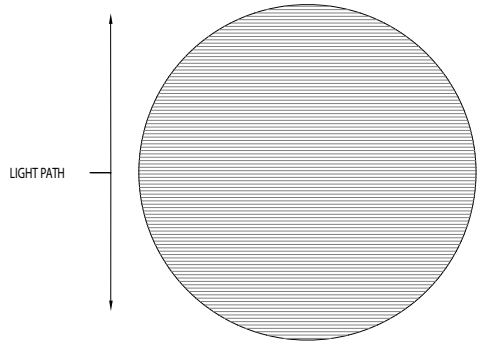

Selux Corporation © 2022, T 845-834-1400, 800-735-8927, F 845-834-1401, www.selux.us
In a continuing effort to offer the best product possible, we reserve the right to change, without notice, specifications or materials that in our opinion will not alter the function of the product. Specification sheets found at www.selux.us are the most recent versions and supercede all other printed or electronic versions.

Photometry

F80 / 14W LED / 3000K CCT

Catalog #: OLPL-F80-X-2G350-30
Delivered Lumens: 1302
Input Watts: 14W
Maximum candela of 898.2
Maximum candela angle: 0H x 0V
NEMA Classification: 6H x 6V
Power Factor: 0.981
Total Harmonic Distortion: 7.99%

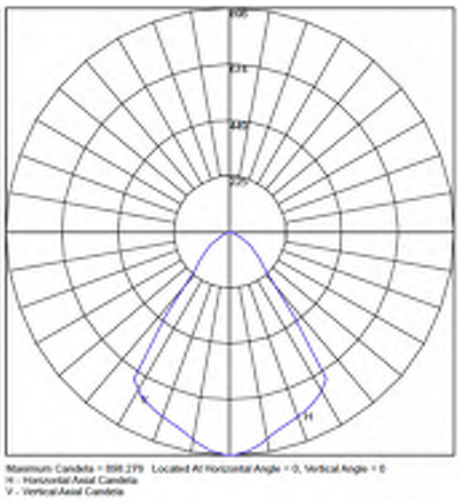

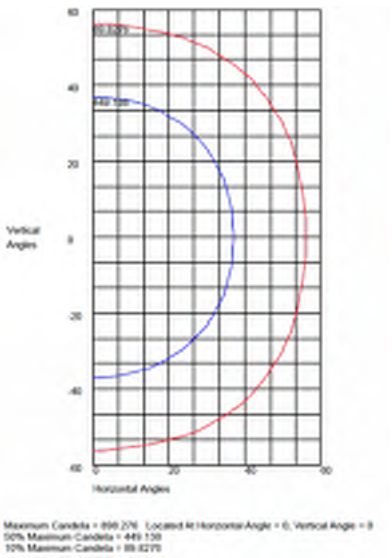

F40 / 14W LED / 3000K CCT

Catalog #: OLPL-F40-X-2G350-30
Delivered Lumens: 1341
Input Watts: 14W
Maximum candela of 2048.9
Maximum candela angle: 0H x 0V
NEMA Classification: 5H x 5V
Power Factor: 0.981
Total Harmonic Distortion: 7.99%

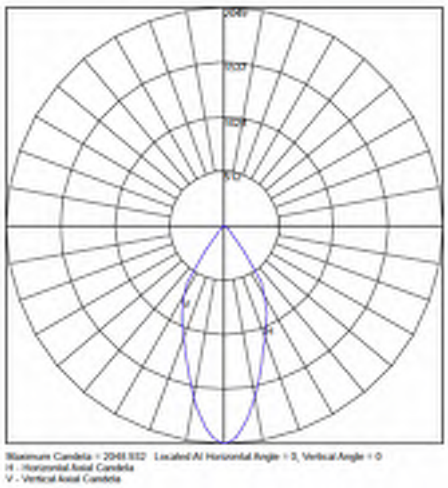

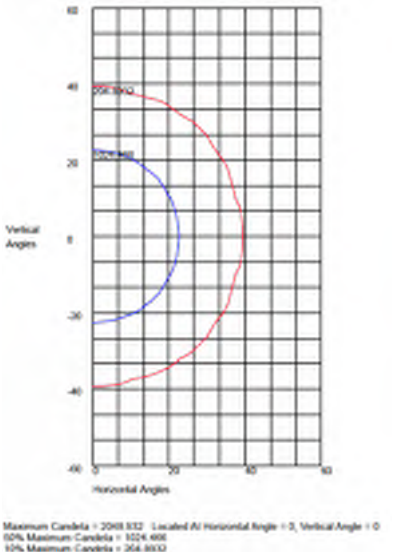

S09 / 14W LED / 3000K CCT

Catalog #: OLPL-S09-X-2G350-30
Delivered Lumens: 1346
Input Watts: 14W
Maximum candela of 16117.7
Maximum candela angle: 0H x 0V
NEMA Classification: 2H x 2V
Power Factor: 0.981
Total Harmonic Distortion: 7.99%

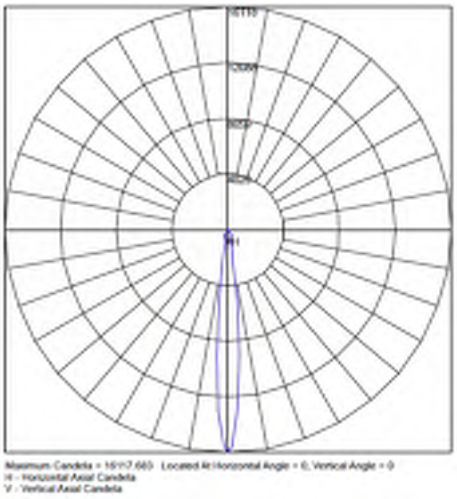

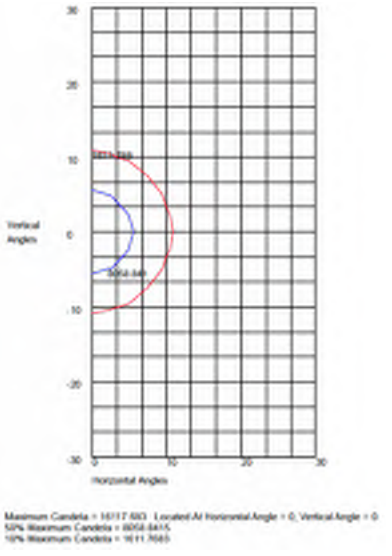

L4

Gunnar

GU1P-18-B-1-S

landscapeforms

Spec Sheet | GUxP



Gunnar is a unique floodlight system with functionality as versatile as its universally modern aesthetic. Gunnar is inspired by the work of neoclassical Swedish architect Gunnar Asplund. Its systematic approach centers around its floodlight projector, a robust LED luminaire whose fluted housing takes cues from the columns of classical architectural orders. While bridging traditional and contemporary design language, Gunnar remains minimal and modern, offering a worldly aesthetic and broad versatility. Wall-mounted, catenary, or pole-mounted in a variety of heights with up to six projectors per single pole, Gunnar provides myriad options for layered lighting in outdoor architectural and urban environments.

Housing & Materials

Extruded aluminum body construction with tempered glass diffuser lens and a threaded weatherproof cord grip. Housing features polymer sealing gasket as well as stainless steel screws.

Electrical

120V through 277V 50/60 Hz integrated electronic driver. 0-10V dimming. -40°C start temperature. Available with optional ANSI C136.41 twist lock receptacle. Gunnar ships prewired and fully assembled.

Light Engines

High powered LEDs mounted to a RoHS compliant circuit board with PMMA optics affixed to each LED on the board. Available in 3000K and 4000K. >80 CRI across all available color temperatures.

Distributions


Widefloood


Flood


Medium


Spot


TII


TIII


TIV


TV


TII+II

Warranty

Urbidermis Santa & Cole guarantees the composition and performance features of all material that shape the product for a period of three years. Electrical components including LED boards and electronic drivers are guaranteed for a period of five years.

Certification

UL Listed for Wet Location, CE, International Dark Sky Approved, RoHS Compliant

Designed by Urbidermis Santa & Cole

LED Configurations

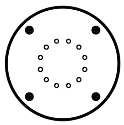
12 LED

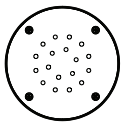
18 LED

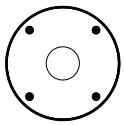
CoB

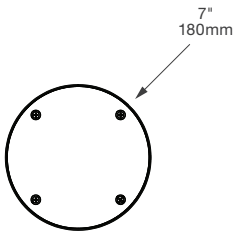

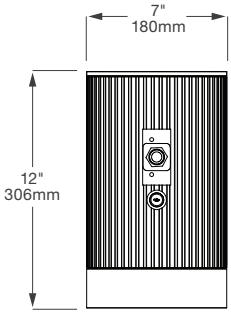

Weight: 10.5 lbs (luminaire only)
EPA: 0.58 ft^2

TM21 L70(10k): >60,000hrs
Protection Class: IP66

Gunnar

Spec Sheet | GUxP

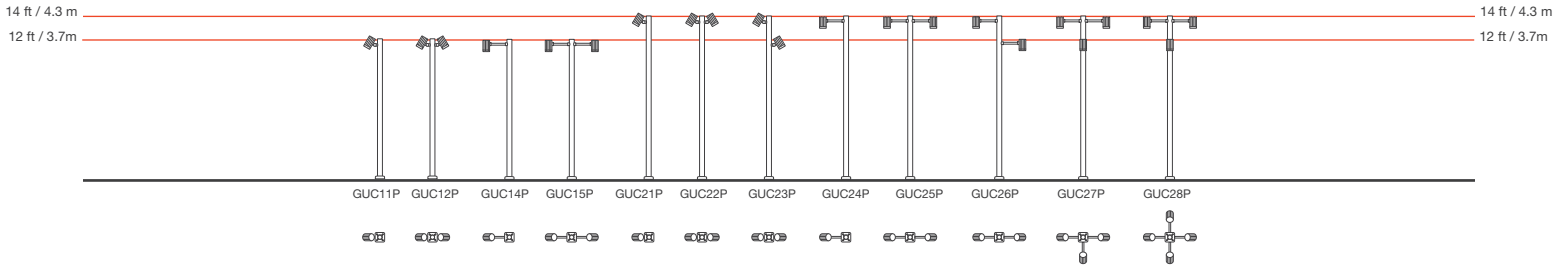

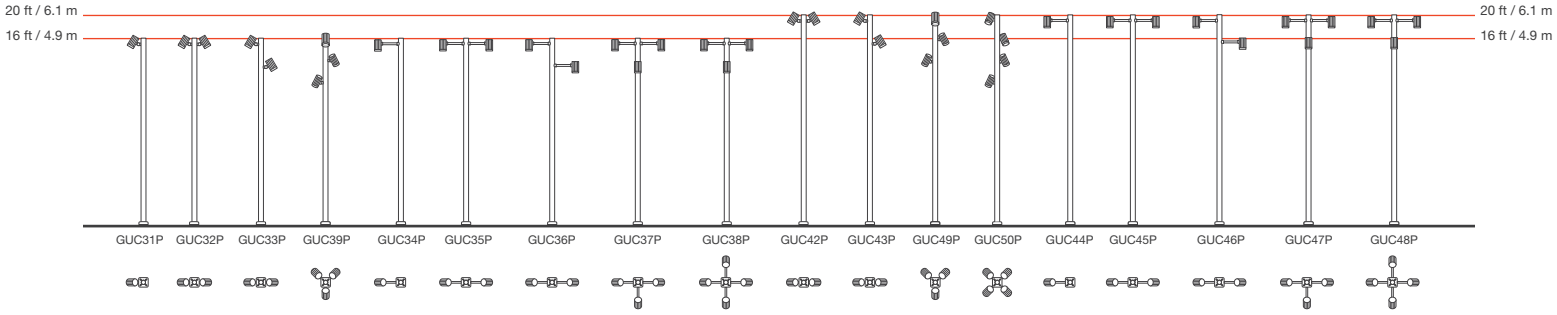

See customer drawings for luminaire mounting height details.

Pole

Straight, round pole is 5" diameter. Manufactured from seamless 6063 aluminum alloy and heat treated to produce a T6 temper. Flush mounted hand hole cover includes two magnicoated fasteners. Base plate is cast aluminum A356 alloy heat treated to a T6 temper and includes four cast aluminum nut covers. Mounting template and anchor hardware is also included. Anchor bolts conform to ASTM F1554 Grade 55 and are provided with two hex nuts and two flat washers. Bolts have an “L” bend on one end and are galvanized a minimum of 12” on the threaded end.

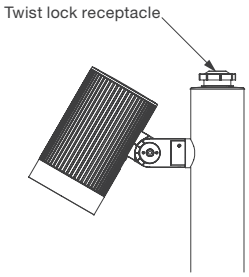

Gunnar

Material / Colors Sheet | GUxP

Pole and Wall Mounting

The Gunnar luminaire has a variety of accessories to adapt it to different configurations. For pole mounted applications, a cast aluminum single adjustable bracket or a single/double arm mounting bracket will attach to a 5" diameter section of pole via a fixed flange or through-bolt. For wall mounted applications, Gunnar will attach via a cast aluminum bracket that includes a cast aluminum wall cover plate. All hardware made from stainless steel.

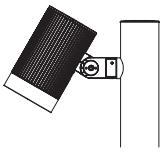

Single Adjustable Bracket
Weight: 2 lbs (bracket only)
EPA: 0.1 ft²

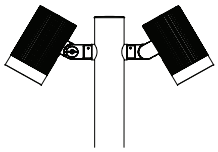

Double Adjustable Bracket
Weight: 4 lbs (bracket only)
EPA: 0.2ft²

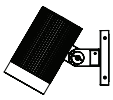

Short Wall Mount Bracket
Weight: 3 lbs (bracket only)
EPA: 0.18ft²

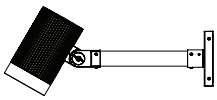

Long Wall mount bracket
Weight: 4.5 lbs (bracket only)
EPA: 0.45ft²

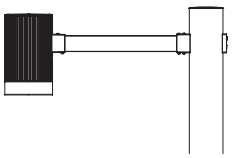

Single Arm
Weight: 2 lbs (bracket only)
EPA: 0.3ft²

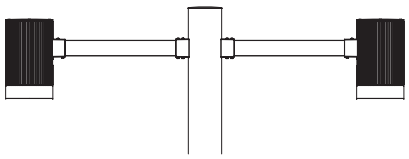

Double Arm
Weight: 3.5 lbs (bracket only)
EPA: 0.58ft²

Catenary Mounting

For catenary applications, the Gunnar will feature a cast aluminum support cable bracket. Gunnar will feature a Loop in/out cord grip design for multiple fixtures on the same line applications. If only one luminaire per span, a waterproof grommet will be provided for the second cord grip opening. Please note that the support cable and electrical cable are not included.

Electrical cable size range: 7-10.5mm, Support cable size range: 4-6mm

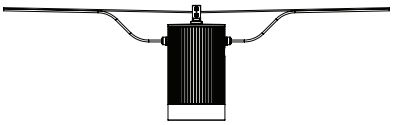

Catenary Double Entry
Weight: 0.5 lbs (bracket only)
EPA: 0.03ft²

Shade Accessory

Shade accessory comes in two pieces and consists of a thermoformed PMMA diffuser shade and an aluminum ULOR shade for mitigating back-light. Aluminum shade piece powder-coated to match luminaire.

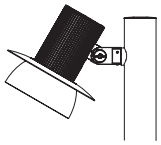

Weight: 2.2 lbs (shade only)
EPA: 0.4ft²

Gunnar

Spec Sheet | GUxP

landscapeforms®

Performance Data

					Wide Flood (WF) 70° Beam Angle			Flood (F) 50° Beam Angle			Medium (M) 30° Beam Angle		
Model	**System Power**	**LED Quantity**	**CCT**	**Drive Current**	**Delivered Lumens***	**Efficacy***	**BUG Rating**	**Delivered Lumens***	**Efficacy***	**BUG Rating**	**Delivered Lumens***	**Efficacy***	**BUG Rating**
GUxP12A1xx	15	12	3000	350	1373	92	B1-U0-G0	1412	94	B1-U0-G0	1435	96	B1-U0-G0
GUxP12B1xx	21			500	1857	88	B1-U0-G0	1910	91	B2-U0-G0	1941	92	B2-U0-G0
GUxP12C1xx	29			700	2537	87	B2-U0-G0	2610	90	B2-U0-G0	2652	91	B2-U0-G0
GUxP12A2xx	15		4000	350	1426	95	B1-U0-G0	1468	98	B2-U0-G0	1491	99	B1-U0-G0
GUxP12B2xx	21			500	1929	92	B1-U0-G0	1985	95	B2-U0-G0	2017	96	B2-U0-G0
GUxP12C2xx	29			700	2636	91	B2-U0-G0	2711	93	B2-U0-G0	2755	95	B2-U0-G0
GUxP18A1xx	20	18	3000	350	2162	108	B2-U0-G0	2224	111	B2-U0-G0	2260	113	B2-U0-G0
GUxP18B1xx	29			500	2911	100	B2-U0-G0	3014	104	B3-U0-G0	3055	105	B2-U0-G0
GUxP18C1xx	40			700	3959	99	B2-U0-G0	4073	102	B3-U0-G0	4138	103	B3-U0-G0
GUxP18A2xx	20		4000	350	2246	112	B2-U0-G0	2311	116	B2-U0-G0	2348	117	B2-U0-G0
GUxP18B2xx	29			500	3162	109	B2-U0-G0	3253	112	B3-U0-G0	3305	114	B3-U0-G0
GUxP18C2xx	40			700	4113	103	B3-U0-G0	4231	106	B3-U0-G0	4299	107	B3-U0-G0
GUxPCA1WF	21	CoB (Chip on Board)	3000	350	1807	86	B2-U0-G0	--	--	--	--	--	--
GUxPCB1WF	30			500	2444	81	B3-U0-G0	--	--	--	--	--	--
GUxPCC1WF	42			700	3339	80	B3-U0-G0	--	--	--	--	--	--
GUxPCA2WF	21		4000	350	1877	89	B2-U0-G0	--	--	--	--	--	--
GUxPCB2WF	30			500	2539	85	B3-U0-G0	--	--	--	--	--	--
GUxPCC2WF	42			700	3469	83	B3-U0-G0	--	--	--	--	--	--

This data is subject to change.

*Apply 0.93 multiplier for opal / diffused lens option.

Gunnar

Spec Sheet | GUxP

landscapeforms®

Performance Data

					Spot (S) 18° Beam Angle			Type II (TII) IES Type II			Type III (TIII) IES Type III		
Model	**System Power**	**LED Quantity**	**CCT**	**Drive Current**	**Delivered Lumens***	**Efficacy***	**BUG Rating**	**Delivered Lumens***	**Efficacy***	**BUG Rating**	**Delivered Lumens***	**Efficacy***	**BUG Rating**
GUxP12A1xx	15	12	3000	350	1457	97	B2-U0-G0	1268	85	B1-U0-G0	1237	82	B0-U0-G0
GUxP12B1xx	21			500	1970	94	B2-U0-G0	1715	82	B1-U0-G1	1673	80	B0-U0-G0
GUxP12C1xx	29			700	2692	93	B3-U0-G0	2343	81	B1-U0-G1	2286	79	B0-U0-G0
GUxP12A2xx	15		4000	350	1514	101	B2-U0-G0	1317	88	B1-U0-G0	1285	86	B0-U0-G0
GUxP12B2xx	21			500	2047	97	B2-U0-G0	1782	85	B1-U0-G1	1738	83	B0-U0-G0
GUxP12C2xx	29			700	2797	96	B3-U0-G0	2434	84	B1-U0-G1	2374	82	B0-U0-G0
GUxP18A1xx	20	18	3000	350	2294	115	B3-U0-G0	1997	100	B1-U0-G1	1948	97	B0-U0-G0
GUxP18B1xx	29			500	3103	107	B3-U0-G0	2701	93	B1-U0-G1	2626	91	B1-U0-G1
GUxP18C1xx	40			700	4200	105	B3-U0-G0	3656	91	B1-U0-G1	3566	89	B1-U0-G1
GUxP18A2xx	20		4000	350	2383	119	B3-U0-G0	2074	104	B1-U0-G1	2024	101	B0-U0-G0
GUxP18B2xx	29			500	3355	116	B3-U0-G0	2920	101	B1-U0-G1	2848	98	B1-U0-G1
GUxP18C2xx	40			700	4364	109	B3-U0-G0	3799	95	B1-U0-G1	3705	93	B1-U0-G1

This data is subject to change.

*Apply 0.93 multiplier for opal / diffused lens option.

Gunnar

Spec Sheet | GUxP

landscapeforms®

Performance Data (cont.)

					Type IV (TIV) IES Type IV			Type V (TV) IES Type V			Type II+II IES Type III		
Model	**System Power**	**LED Quantity**	**CCT**	**Drive Current**	**Delivered Lumens***	**Efficacy***	**BUG Rating**	**Delivered Lumens***	**Efficacy***	**BUG Rating**	**Delivered Lumens***	**Efficacy***	**BUG Rating**
GUxP12A1xx	15	12	3000	350	1195	80	B0-U0-G0	1280	85	B1-U0-G0	1200	80	B1-U0-G1
GUxP12B1xx	21			500	1617	77	B0-U0-G0	1731	82	B1-U0-G0	1623	77	B1-U0-G1
GUxP12C1xx	29			700	2209	76	B1-U0-G1	2365	82	B1-U0-G0	2217	76	B1-U0-G1
GUxP12A2xx	15		4000	350	1242	83	B0-U0-G0	1330	89	B1-U0-G0	1246	83	B1-U0-G1
GUxP12B2xx	21			500	1680	80	B1-U0-G0	1799	86	B1-U0-G0	1686	80	B1-U0-G1
GUxP12C2xx	29			700	2295	79	B1-U0-G1	2457	85	B1-U0-G0	2303	79	B1-U0-G1
GUxP18A1xx	20	18	3000	350	1882	94	B1-U0-G1	2015	101	B1-U0-G0	1889	94	B1-U0-G1
GUxP18B1xx	29			500	2552	88	B1-U0-G1	2715	94	B1-U0-G0	2661	92	B1-U0-G1
GUxP18C1xx	40			700	3447	86	B1-U0-G1	3690	92	B2-U0-G0	3460	87	B2-U0-G1
GUxP18A2xx	20		4000	350	1956	98	B1-U0-G1	2094	105	B1-U0-G0	1963	98	B1-U0-G1
GUxP18B2xx	29			500	2753	95	B1-U0-G1	2947	102	B1-U0-G0	2763	95	B1-U0-G1
GUxP18C2xx	40			700	3581	90	B1-U0-G1	3834	96	B2-U0-G0	3594	90	B2-U0-G1

This data is subject to change.

*Apply 0.93 multiplier for opal / diffused lens option.

Gunnar

Spec Sheet | GUxP

landscapeforms®

GUxP18A1WF

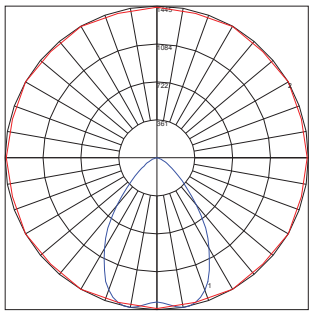

Maximum Candela = 1444.73
Located At Horizontal Angle = 30,
Vertical Angle = 12.5

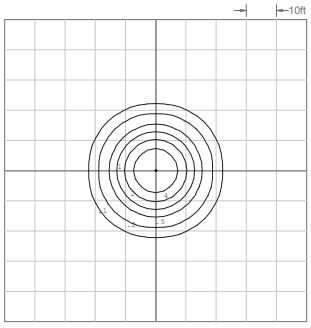

14ft (4.3m) pole, single luminaire depicted.

GUxPCA1WF

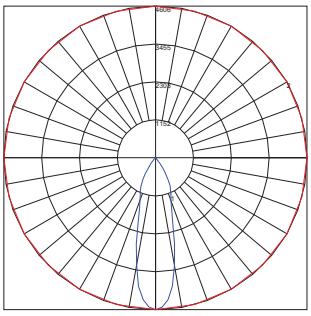

Maximum Candela = 44272.53
Located At Horizontal Angle = 90,
Vertical Angle = 0

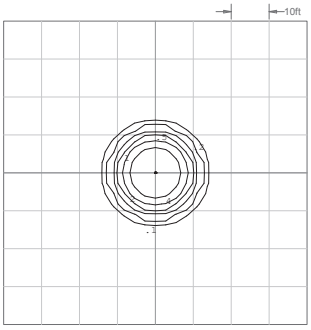

14ft (4.3m) pole, single luminaire depicted.

GUxP18A1F

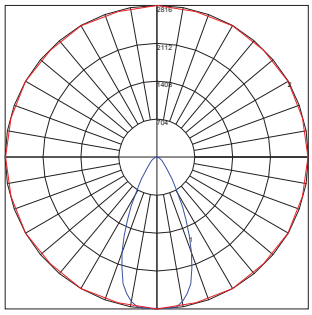

Maximum Candela = 2816.12
Located At Horizontal Angle = 90,
Vertical Angle = 5

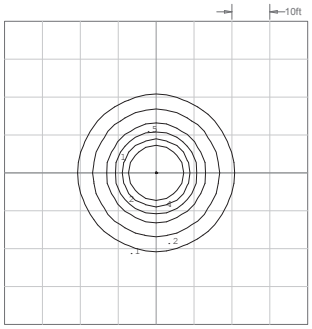

14ft (4.3m) pole, single luminaire depicted.

GUxP18A1M

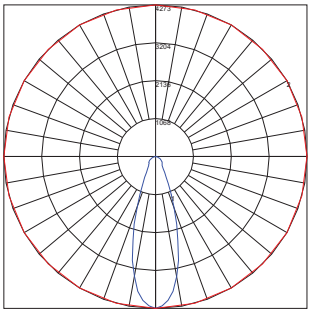

Maximum Candela = 4272.53
Located At Horizontal Angle = 90,
Vertical Angle = 0

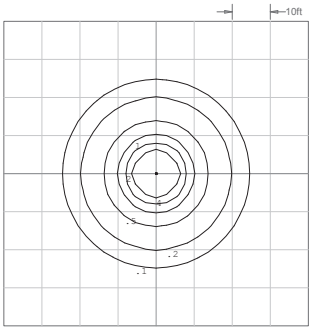

14ft (4.3m) pole, single luminaire depicted.

GUxP18A1S

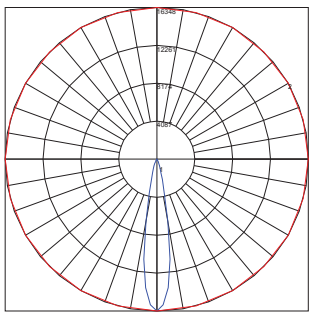

Maximum Candela = 16347.67
Located At Horizontal Angle = 90,
Vertical Angle = 0

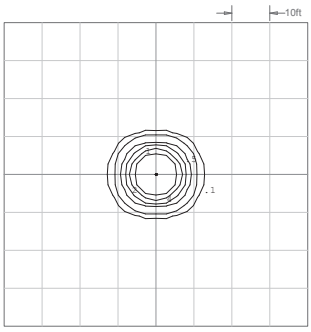

14ft (4.3m) pole, single luminaire depicted.

GUxP18A1TII

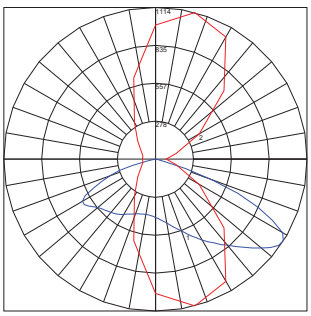

Maximum Candela = 1113.8
Located At Horizontal Angle = 285,
Vertical Angle = 57.5

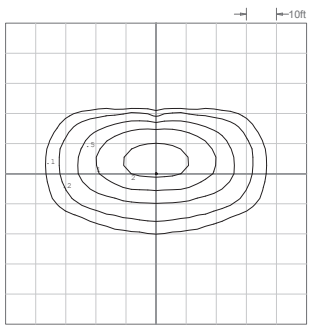

14ft (4.3m) pole, single luminaire depicted.

Gunnar

Spec Sheet | GUxP

landscapeforms®

GUxP18A1TIII

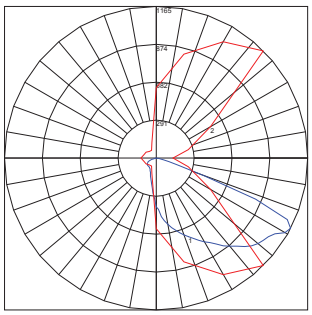

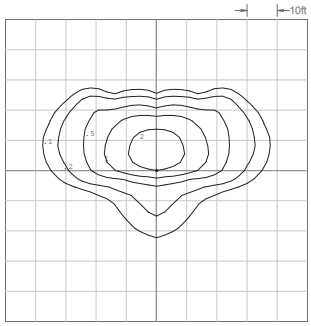

Maximum Candela = 1164.69
Located At Horizontal Angle = 315,
Vertical Angle = 62.5

14ft (4.3m) pole, single luminaire depicted.

GUxP18A1TIV

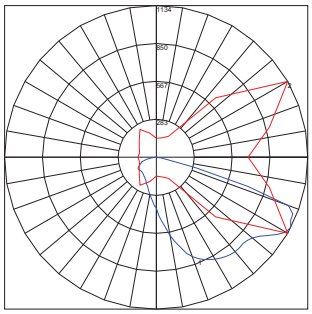

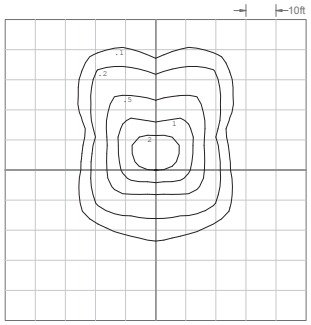

Maximum Candela = 1133.76
Located At Horizontal Angle = 330,
Vertical Angle = 62.5

14ft (4.3m) pole, single luminaire depicted.

GUxP18A1TV

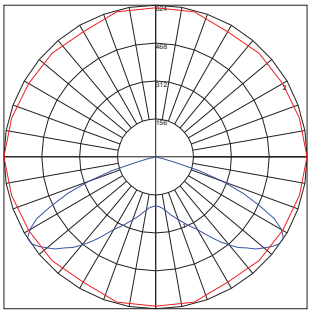

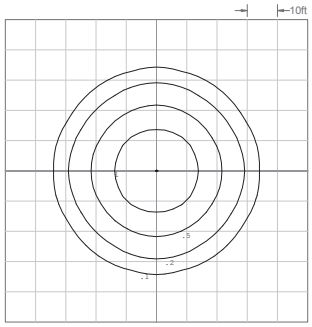

Maximum Candela = 623.94
Located At Horizontal Angle = 0,
Vertical Angle = 57.5

14ft (4.3m) pole, single luminaire depicted.

GUxP18A1TII+II

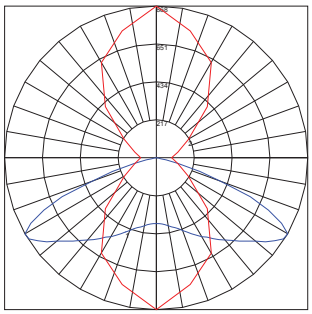

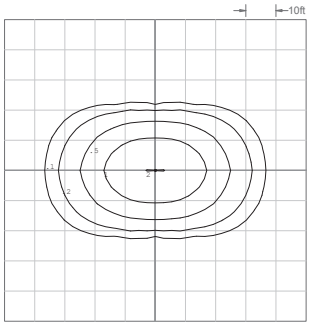

Maximum Candela = 868.01
Located At Horizontal Angle = 270,
Vertical Angle = 60

14ft (4.3m) pole, single luminaire depicted.

Gunnar

Spec Sheet | GUxP

landscapeforms®

Pole & Wall Mount Luminaire

Product	LED Configuration	Drive Current	Color Temperature	Distribution	Lens
GU1P	12	A *(350 mA)*	1 *(3000K)*	WF *(Wide Flood)*	Null *(Clear)*
	18	B *(500 mA)*	2 *(4000K)*	F *(Flood)*	O *(Opal/Diffused)*
	CoB *	C *(700 mA)*		M *(Medium)*	
				S *(Spot)*	
				TII *(Type 2)*	
				TIII *(Type 3)*	
				TIV *(Type 4)*	
				TV *(Type 5)*	
				TII+II *(Quad Oval)*	

Example: GU1P – 12 – A – 1 – TII – O – Powdercoat
* CoB provides a Wide Flood distribution only.

Catenary Mount Luminaire

Product	LED Configuration	Drive Current	Color Temperature	Distribution	Lens
GU2P	12	A *(350 mA)*	1 *(3000K)*	WF *(Wide Flood)*	Null *(Clear)*
	18	B *(500 mA)*	2 *(4000K)*	F *(Flood)*	O *(Opal/Diffused)*
	CoB *	C *(700 mA)*		M *(Medium)*	
				S *(Spot)*	
				TII *(Type 2)*	
				TIII *(Type 3)*	
				TIV *(Type 4)*	
				TV *(Type 5)*	
				TII+II *(Quad Oval)*	

Example: GU2P – 18 – C – 1 – M – O – Powdercoat
* CoB provides a Wide Flood distribution only.

Gunnar

Spec Sheet | GUxP

landscapeforms®

Mounting Accessories

Product	Bracket
GUA	01 *(Single Adjustable)*
	03 *(Double Adjustable)*
	04 *(Single Arm)*
	05 *(Double Arm)*
	06 *(Short Wall)*
	07 *(Long Wall)*

Example: GUA – 05 – Powdercoat

Luminaire Accessories

Product	Accessories
GUA	08 *(Comfort ULOR Shade)*

Example: GUA – 08 – Powdercoat

Pole

Height	Pole No.	Mounting	Diameter	Wall Thickness	Weight
12 ft (3.7m)	GUC11P	(1) Single Adjustable Bracket	Straight 5" (127mm)	0.125" (3.175mm)	32 lbs
12 ft (3.7m)	GUC12P	(1) Double Adjustable Bracket, Back-to-Back	Straight 5" (127mm)	0.125" (3.175mm)	32 lbs
12 ft (3.7m)	GUC14P	(1) Single Arm	Straight 5" (127mm)	0.125" (3.175mm)	32 lbs
12 ft (3.7m)	GUC15P	(1) Double Arm	Straight 5" (127mm)	0.125" (3.175mm)	32 lbs
14 ft (4.3m)	GUC21P	(1) Single Adjustable Bracket	Straight 5" (127mm)	0.125" (3.175mm)	36 lbs
14 ft (4.3m)	GUC22P	(1) Double Adjustable bracket, Back-to-Back	Straight 5" (127mm)	0.125" (3.175mm)	36 lbs
14 ft (4.3m)	GUC23P	(2) Single Adjustable Brackets, Staggered Heights, 180° Orientation	Straight 5" (127mm)	0.125" (3.175mm)	36 lbs
14 ft (4.3m)	GUC24P	(1) Single Arm	Straight 5" (127mm)	0.125" (3.175mm)	36 lbs
14 ft (4.3m)	GUC25P	(1) Double Arm	Straight 5" (127mm)	0.125" (3.175mm)	36 lbs
14 ft (4.3m)	GUC26P	(2) Single Arms, Staggered Heights, 180° Orientation	Straight 5" (127mm	0.125" (3.175mm	36 lbs
14 ft (4.3m)	GUC27P	(1) Double Arm, (1) Single arm, Staggered, 90° Orientation	Straight 5" (127mm)	0.125" (3.175mm)	36 lbs
14 ft (4.3m)	GUC28P	(2) Double Arms, Staggered, 90° Orientation	Straight 5" (127mm)	0.156" (3.962mm)	44 lbs

Gunnar

Spec Sheet | GUxP

landscapeforms®

Pole

Height	Pole No.	Mounting	Diameter	Wall Thickness	Weight
16 ft (4.9m)	GUC31P	(1) Single Adjustable Bracket	Straight 5" (127mm)	0.125" (3.175mm)	41 lbs
16 ft (4.9m)	GUC32P	(1) Double Adjustable Bracket, Back-to-Back	Straight 5" (127mm)	0.125" (3.175mm)	41 lbs
16 ft (4.9m)	GUC33P	(2) Single Adjustable Brackets, Staggered Heights, 180° Orientation	Straight 5" (127mm)	0.125" (3.175mm)	41 lbs
16 ft (4.9m)	GUC34P	(1) Single Arm	Straight 5" (127mm)	0.125" (3.175mm)	41 lbs
16 ft (4.9m)	GUC35P	(1) Double Arm	Straight 5" (127mm)	0.125" (3.175mm)	41 lbs
16 ft (4.9m)	GUC36P	(2) Single Arms, Staggered Heights, 180° Orientation	Straight 5" (127mm)	0.125" (3.175mm)	41 lbs
16 ft (4.9m)	GUC37P	(1) Double Arm, (1) Single Arm, Staggered, 90° Orientation	Straight 5" (127mm)	0.125" (3.175mm)	41 lbs
16 ft (4.9m)	GUC38P	(2) Double Arms, Staggered, 90° Orientation	Straight 5" (127mm)	0.156" (3.962mm)	50 lbs
16 ft (4.9m)	GUC39P	(3) Single Adjustable Brackets, Spiraled, 120° Orientation	Straight 5" (127mm)	0.125" (3.175mm)	41 lbs
20 ft (6.1m)	GUC42P	(1) Double Adjustable Bracket, Back-to-Back	Straight 5" (127mm)	0.125" (3.175mm)	50 lbs
20 ft (6.1m)	GUC43P	(2) Single Adjustable Brackets, Staggered Heights, 180° Orientation	Straight 5" (127mm)	0.125" (3.175mm)	50 lbs
20 ft (6.1m)	GUC44P	(1) Single Arm	Straight 5" (127mm)	0.125" (3.175mm)	50 lbs
20 ft (6.1m)	GUC45P	(1) Double Arm	Straight 5" (127mm)	0.156" (3.962mm)	61 lbs
20 ft (6.1m)	GUC46P	(2) Single Arms, Staggered Heights, 180° Orientation	Straight 5" (127mm)	0.156" (3.962mm)	61 lbs
20 ft (6.1m)	GUC47P	(1) Double Arm, (1) Single Arm, Staggered, 90° Orientation	Straight 5" (127mm)	0.156" (3.962mm)	61 lbs
20 ft (6.1m)	GUC48P	(2) Double Arms, Staggered, 90° Orientation	Straight 5" (127mm)	0.188" (4.775mm)	72 lbs
20 ft (6.1m)	GUC49P	(3) Single Adjustable Brackets, Spiraled, 120° Orientation	Straight 5" (127mm)	0.125" (3.175mm	50 lbs
20 ft (6.1m)	GUC50P	(4) Single Adjustable Brackets, Spiraled, 90° Orientation	Straight 5" (127mm	0.156" (3.962mm)	61 lbs

Control Options

Twist Lock Receptacle
T *(Twist Lock)*
NT *(No Twist Lock)*

Example: GUC43P – T – Powdercoat

Power Receptacle Option

Power Receptacle*
R *(Power Receptacle)*
NR *(No Power Receptacle)*

Example: GUC50C – R – Powdercoat
*In-use cover; wet location listed when cover is closed. Handhole must be 18" from GFCI. GFCI is default location Orientation: 180°; Height: 36" A.F.G.

Gunnar

Material / Colors Sheet | GUxP

landscapeforms®

Luminaire & Mounting Brackets*


Aluminum Silver


Dusk


Black

Powdercoated Metal (Gloss; Poles Only)**


Black


Stormcloud

Powdercoated Metal (Metallic; Poles Only)**


Silver


Titanium


Mercury***

Designer Palette Architectural Series (Low Sheen; Poles Only)**


Matte Black


Dusk

Gunnar

Material / Colors Sheet | GUxP

Powdercoated Metal

Powdercoated Metal Pangard II® Polyester Powdercoat is a hard, yet flexible, finish that resists rusting, chipping, peeling and fading. In addition to colors shown, a wide selection of optional and custom colors may be specified for an upcharge.

* LED luminaire colors shown are the color options offered from Urbidermis Santa & Cole.

** All colors and patterns shown are approximate and may vary from sample and final.

*** Mercury from Landscape Forms is our recommended color match for Aluminum Silver from Urbidermis Santa & Cole.

Visit landscapeforms.com for more information. Specifications are subject to change without notice. Landscape Forms supports the Landscape Architecture Foundation at the Second Century level.
©2022 Landscape Forms, Inc. Printed in U.S.A.

landscapeforms.com | *specify@landscapeforms.com*





VLO 12V LED Large Accent

L5

16020-BKT-30

One light, three lumen levels.

Our VLO Accent fixture is equipped with the Lumen Effects System, which allows you to easily switch between three lumen outputs: 400, 600, or 835, with the use of the Magnetic Key. Its field configurable design allows for customization based on the needs of the application.

Variable Lumen Output (VLO) Adjustment			Lumens
Level 1*	Flashes one time		400 lm
Level 2	Flashes two times		600 lm
Level 3	Flashes three times		835 lm

Factory setting

VLO 12V LED Accent with Lumen Effects System makes designing and modifying landscape lighting easier.

Lumen Effects System eliminates the need to mechanically adjust or open the fixture, supporting product longevity.

Flexible Lumen Levels allows you to set and adjust the lumen levels as the landscape needs change.

Sealed and fully encapsulated to safeguard from water ingression and the outdoor elements – helping to extend the life of the product.

Versatile IP66 rated design provides a dust and water tight housing that can protect against strong jets of water that can occur in coastal areas with strong storms or applications close to sprinklers.

6,000-volt system surge protection protects against power surges and irregularities when paired with one of our transformers.

KICHLER

PRODUCT ORDERING GUIDE

Ordering Guide (product number breakdown)	1 Item Number for Fixture & Beam Angle:	2 Product Finish:	3 Color Temperature:
Example: 16018 CBR 30	**16018** = 15° Narrow Spot **16019** = 35° Flood **16020** = 60° Wide Flood 1 6 0 1 8	**AZT** = Textured Architectural Bronze **BKT** = Black **CBR** = Centennial Brass C B R	**27** = 2700K, Warm White **30** = 3000K, Pure White 3 0

BEAM SPREAD



15°
Narrow Spot



35°
Flood

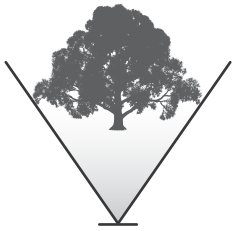

60°
Wide Flood

PHOTOMETRICS

16018AZT27 **16018BKT27** **16018CBR27** 15° Narrow Spot 2700K - Warm White	**16018AZT30** **16018BKT30** **16018CBR30** 15° Narrow Spot 3000K - Pure White	**16019AZT27** **16019BKT27** **16019CBR27** 35° Flood 2700K - Warm White	**16019AZT30** **16019BKT30** **16019CBR30** 35° Flood 3000K - Pure White	**16020AZT27** **16020BKT27** **16020CBR27** 60° Wide Flood 2700K - Warm White	**16020AZT30** **16020BKT30** **16020CBR30** 60° Wide Flood 3000K - Pure White

LEVEL 1 LUMENS

Item	16018 (Low - 400 lm)			Item	16019 (Low - 400 lm)			Item	16020 (Low - 400 lm)		
Beam	15° Narrow Spot			Beam	35° Flood			Beam	60° Wide Flood		
Candela	Max Candela: 3521			Candela	Max Candela: 948			Candela	Max Candela: 396		
Distance	Foot-candles	400 lm	Beam Width	Distance	Foot-candles	400 lm	Beam Width	Distance	Foot-candles	400 lm	Beam Width
60'	**0.7**		15.8'	40'	**0.4**		24.5'	40'	**0.2**		49'
48'	**1.1**		12.6'	32'	**0.6**		19.6'	32'	**0.3**		39.2'
36'	**2**		9.5'	24'	**1**		14.7'	24'	**0.5**		29.4'
24'	**4.5**		6.3'	16'	**2.3**		9.8'	16'	**1.1**		19.6'
12'	**17.9**		3.2'	8'	**9.3**		4.9'	8'	**4.3**		9.8'
8'	**40.2**		2.1'	4'	**37.3**		2.5'	4'	**17.1**		4.9'

LEVEL 2 LUMENS

Item	16018 (Mid - 600 lm)			Item	16019 (Mid - 600 lm)			Item	16020 (Mid - 600 lm)		
Beam	15° Narrow Spot			Beam	35° Flood			Beam	60° Wide Flood		
Candela	Max Candela: 4925			Candela	Max Candela: 1315			Candela	Max Candela: 560		
Distance	Foot-candles	600 lm	Beam Width	Distance	Foot-candles	600 lm	Beam Width	Distance	Foot-candles	600 lm	Beam Width
60'	**1.3**		15.8'	40'	**.7**		24.5'	40'	**0.3**		49'
48'	**2.1**		12.6'	32'	**1**		19.6'	32'	**0.5**		39.2'
36'	**3.7**		9.5'	24'	**1.8**		14.7'	24'	**0.8**		29.4'
24'	**8.3**		6.3'	16'	**4.1**		9.8'	16'	**1.8**		19.6'
12'	**33.2**		3.2'	8'	**16.4**		4.9'	8'	**7.3**		9.8'
8'	**74.7**		2.1'	4'	**65.6**		2.5'	4'	**29.1**		4.9'

LEVEL 3 LUMENS

Item	16018 (High - 835 lm)			Item	16019 (High - 835 lm)			Item	16020 (High - 835 lm)		
Beam	15° Narrow Spot			Beam	35° Flood			Beam	60° Wide Flood		
Candela	Max Candela: 6576			Candela	Max Candela: 1816			Candela	Max Candela: 750		
Distance	Foot-candles	835 lm	Beam Width	Distance	Foot-candles	835 lm	Beam Width	Distance	Foot-candles	835 lm	Beam Width
60'	**1.8**		15.8'	40'	**0.9**		24.5'	40'	**40.8**		49'
48'	**2.8**		12.6'	32'	**1.3**		19.6'	32'	**10.2**		39.2'
36'	**5**		9.5'	24'	**2.4**		14.7'	24'	**2.6**		29.4'
24'	**11.2**		6.3'	16'	**5.4**		9.8'	16'	**1.1**		19.6'
12'	**44.8**		3.2'	8'	**21.5**		4.9'	8'	**0.6**		9.8'
8'	**100.8**		2.1'	4'	**86**		2.5'	4'	**0.4**		4.9'

VLO 12V LED Large Accent

Additional Specs



FINISH OPTIONS

AZT - Textured Architectural Bronze

BKT - Textured Black

CBR - Centennial Brass

PERFORMANCE

Output Position	Level 1	Level 2	Level 3
Lumen Output	400 lm	600 lm	835 lm
Input Voltage	9V-15V	9V-15V	9V-15V
Power (VA) @ 15V AC	8.5VA	12.5VA	17VA
Power (W) @ 15V DC	5.25W	8.5W	12W
Efficacy (lm/W @ DC)	76 lm/W	70 lm/W	69 lm/W
Halogen Equivalents	40W	60W	83.5W

SPECIFICATIONS

Fixture

Light Source	Integrated LED
Number of LEDs	1 High Output COB
Color Temperature	2700K, 3000K
Color Rendering Index	80+
Beam Angles	15°, 35°, 60°
Binning	3 Step

Fixture can be used in up or down position.

Input

Input Voltage Range	9 – 15V AC or DC with no loss in light output
Input Frequency	47 - 63Hz
Input Current	2.55A Max @ 9VAC
Inrush Current	9A Max
Efficiency	> 70L/W @ 12VDC
Power Factor	> 0.7 @ 15V

Environmental

Environmental Protection Rating	Wet, IP66
Operation Ambient Temperature	-25°C - +40°C
Lumen Maintenance (L70)	50K Hours

Mechanical & Housing Specification

Diameter/Height	2.75" W x 6" L x 4.5" H
Housing Material	Cast Aluminum, Cast Brass
Housing Color & Surface	AZT, BKT or CBR
Weight	24 oz (Aluminum), 48 oz (Brass)

Lens Material

Tempered, shock resistance glass with high tolerance for thermal expansion and stress.

Wire

18 AWG, 105°C, 300V 48" of usable #18-2 SPT-1W leads.

Optics

Polycarbonate TIR lens provides superior fixture beam angle. Available in 15°, 35° and 60°.

FIXTURE ATTRIBUTES

Included Accessories

8" Slotted In-ground Stake, 2 Gel-Filled Wire Nuts, Locknut, and Magnetic Key.

Optional Accessories

3" Riser Stem	15509CBR
6" Riser Stem	15645AZT, BKT, 15510CBR
12" Riser Stem	15656AZT, BKT, 15511CBR
18" Riser Stem	15657AZT, BKT, 15512CBR
24" Riser Stem	15658AZT, BKT, 15513CBR
Adjustable Riser Stem	15570AZT, BKT
Stem Coupler	15649AZT, BKT
Mounting Base	15493CBR
Two Fixture "T"	15515CBR
Surface Flange	15601AZT, BKT
Bracket	15607AZT, BKT, 15516CBR
Tree Mount	15609AZT, BKT, CBR
Elbow	15647AZT, 15514CBR
Gutter Mount	15489CBR
Long Cowl	16068CBR
Amber Lens	16072AMB
Green Lens	16072GRN
Hexcell Louver	16075BK
Beam Expander	16091FRO
8" Stake	15575BK
14" Stake	15576BK
Power Post	15276BK

LOAD CHART

Power (VA)	Wire Gauge / Length (ft/m) Load Chart			
	10 AWG	12 AWG	14 AWG	16 AWG
0-20 VA	1860'/567 m	1150'/351 m	730'/223 m	450'/137 m
40 VA	930'/283 m	580'/177 m	370'/113 m	230'/70 m
60 VA	620'/189 m	390'/119 m	240'/73 m	150'/46 m
80 VA	470'/143 m	290'/88 m	180'/55 m	110'/34 m
100 VA	370'/113 m	230'/70 m	140'/43 m	90'/27 m
>100 VA	Consult Technical Support			

TROUBLE SHOOTING

Fixture does not illuminate	Verify power connections. Review installation guide for installation problem. Ensure manual reset breaker has not been tripped.
Fixture flashes	Verify load calculations for the installation. Check voltage at affected fixture. Verify you are on 15V output tap.
Fixture turns off	Verify power connections. Review installation guide for installation problems. Ensure manual reset breaker has not been tripped. Check voltage drop at fixture.
Fixture trips breaker	Check installation for a possible short or overload state. Isolate the identified short and replace affected fixture or remove fixture(s) installed in overload.
Fixture returns to original lumen output	The fixture has to be powered on for 2 minutes after final adjust to exit programming mode.

LISTING

UL 1838 Listed. Low Voltage Landscape Lighting Systems.

CSA C22.2#250.7 Listed.

FCC Part 15, subpart B, Class B

WARRANTY

Backed by our 15 year limited warranty.
Visit **Kichler.com/Warranty** for details.

DISCLOSURE

1. Chip binning ranges: (2700K 80+ CRI: 3 step), (3000K 80+ CRI: 3 step). LED chip data measured in accordance to IES LM-80.
2. Fixture has a 90% confidence luminous flux range to stated 3000K CCT target. Photometric (flux and color) data has been measured in accordance to IES LM- 79.
3. Actual efficacy value can be calculated as follows: Lumen value divided by average power consumption.
4. Do not extend beyond the recommended maximum run length.
5. Recommend product be installed with 10 or 12 gauge wire.
6. Recommend 80% load/20% overhead rule for fixture load planning in reference to the power source. Calculating fixture loading this way provides additional resource for fixture adjustment and loss due to voltage drop due to wire run lengths.
7. We reserve the right to modify and improve the design of our fixtures without prior notice. We cannot guarantee to match existing installed fixtures for subsequent orders or replacements in regards to product appearance, CCT, or lumen output.
8. Damage caused by misuse (including use for an unintended application) or improper or incorrect installation, maintenance or repair, including failure to follow the applicable care and cleaning instructions, is not covered by our warranty.

ADVANCED PRODUCT SOLUTIONS (APS) & LAYOUT TEAM

Have installation issues or a product and location inquiry? We have you covered. Our APS team can provide you with technical guidance and professionally designed landscape lighting layouts free of charge.

Visit **Kichler.com/APS**, reach out to us at **layouts@kichler.com**, or by phone Monday - Friday, 8:00 am to 6:30 pm EST, at **844-KICHLER (844-542-4537)** to get started.

© 2021 Kichler Lighting LLC. All rights reserved. | STLD21010

KICHLER

HELIO™ BOLLARD, SERIES 600

PRODUCT DATA



HELIO™ BOLLARD, SERIES 600

PRODUCT DATA

Helio Bollards, Series 600 bring an elegant simplicity to public spaces of all kinds. Constructed of stainless steel, fixtures 6" in diameter are available in illuminated and non-illuminated variations with or without a security core option. Illuminated bollards feature a frosted acrylic lens, 180˚ or 360˚ light distribution, and Cree® LEDs in 3000K warm white and 4000K neutral white. Helio Bollards with 3000K LEDs are approved by the International Dark-Sky Association to minimize light pollution. For expanded performance, the Helio family also includes Helio M40/K8 and M50/K12 Security Bollards 11.5" in diameter (Series 1200) and Helio M30/K4 Security Bollards 9.25" in diameter (Series 900), all in illuminated and non-illuminated designs.

MATERIAL & CONSTRUCTION DETAILS

CONFIGURATIONS

- Series 600 Helio Bollards are 40" high x 6" in diameter.
- Illuminated bollards are available with 180° and 360° light distribution options.
- Non-illuminated versions are also available.
- Series 600 Helio Bollards are available with an optional S10-P1 rated security core (illuminated or non-illuminated).

MATERIALS & FINISHES

- Illuminated bollards have a tubular stainless steel column, frosted acrylic lens, and a stainless steel head cap.
- Non-Illuminated bollards are tubular stainless steel with welded stainless steel cap.
- Stainless steel is standardwith a Satin finish and Ceramiloc treatment. See below for details.
- For optional powdercoat colors see the Forms+Surfaces Powdercoat Chart. Custom RAL colors are available for an upcharge.

LED LAMPS & DRIVER

- Custom LED light engine with Cree® LEDs.
- 3000K warm white and 4000K neutural white color temperatures.
- 424 lumen output.
- Less than 5% upward lumen output.
- LED driver input voltage is 120-277VAC, -30˚C minimum starting temperature.
- Driver has reverse-phase, forward-phase, and 0-10V dimming capabilities.
- LED driver certifications include: IP66 (waterproof) enclosure, and Class 2 rated output (UL8750).

INSTALLATION

- Standard mounting is surface mount.
- Security bollards have an embedded security core.
- Installation of a surge protector as part of each unit's wiring is recommended.
- Stainless steel mounting hardware sold separately. Templates are available upon request.

MAINTENANCE

- Metal surfaces can be cleaned as needed using a soft cloth or brush with warm water and a mild detergent. Avoid abrasive cleaners.

CERAMILOC TREATMENT

Ceramiloc is an invisible surface treatment that offers significantly enhanced protection from weather and graffiti and increases the maintenance ease of stainless steel. Ceramiloc combines ceramic durability with an unparalleled ability to lock out water spots, fingerprints, graffiti and more. Patented technology bonds nano-silica particles to the surface of the stainless steel. The treatment minimally alters the surface appearance of the stainless and offers numerous benefits:

- Easily Cleaned: The Ceramiloc treatment creates a surface that simultaneously resists fingerprints and is easy to clean. Water spots, grease marks and more can be quickly wiped away. It also creates an “anti-graffiti” surface – even permanent marker is easily removed with a clean microfiber towel and water.
- Durable: Ceramiloc-treated materials are corrosion- abrasion- and scratch-resistant. The treatment is permanent, UV stable, and will not degrade or discolor over time. Salt spray testing per ASTM B117 showed no change after 240 hours.
- Environmentally Sound: The Ceramiloc treatment is a no-VOC, water-based process. Because Ceramiloc surfaces are so easily maintained, cleaning solutions and maintenance are kept to a minimum.

LIGHT ENGINE DESCRIPTIONS

LED ENGINE	LIGHT DISTRIBUTION	DRIVER	LUMINAIRE LUMENS*	B.U.G. RATINGS
3000K LED	360°	40W	424	B0-U1-G0
4000K LED	360°	40W	424	B0-U1-G0
3000K LED	180°	20W	158	B0-U1-G0
4000K LED	180°	20W	158	B0-U1-G0

*Luminaire lumens represents the absolute photometry for the luminaire, and indicates the lumens out of the entire fixture.

NOTE: Polar candela and isofootcandle plots can be found on the Helio Bollard, Series 600 product page on our website.

© 2022 Forms+Surfaces® | All dimensions are nominal. Specifications and pricing subject to change without notice. For the most current version of this document, please refer to our website at www.forms-surfaces.com.

ILLUMINATED BOLLARDS

NOMINAL DIMENSIONS

SURFACE MOUNT WITH J-BOLTS

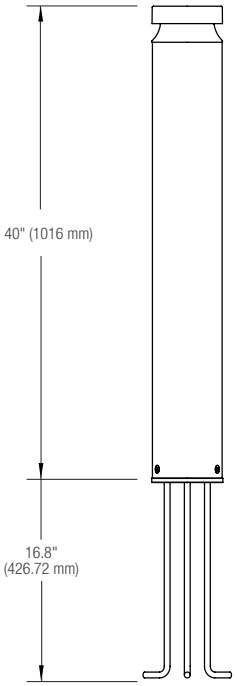

EMBEDDED SECURITY CORE

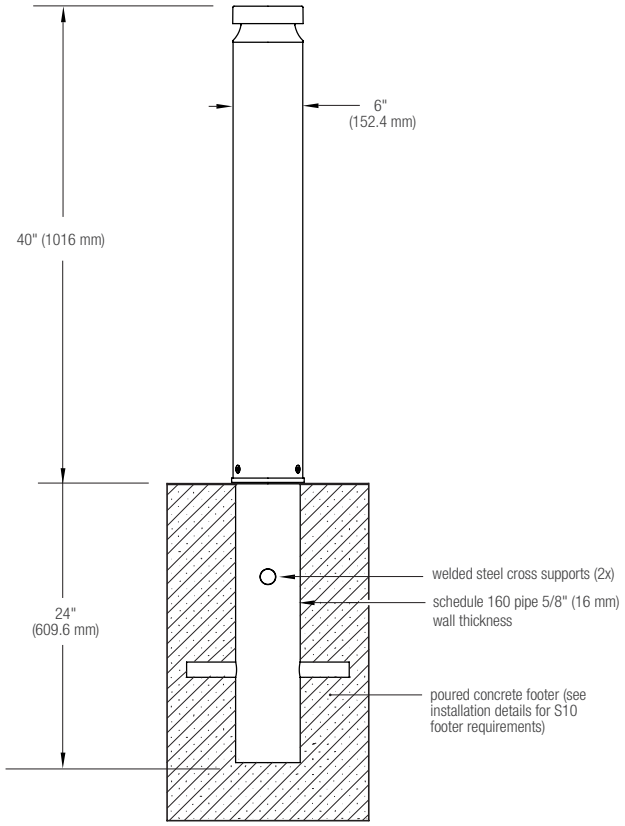

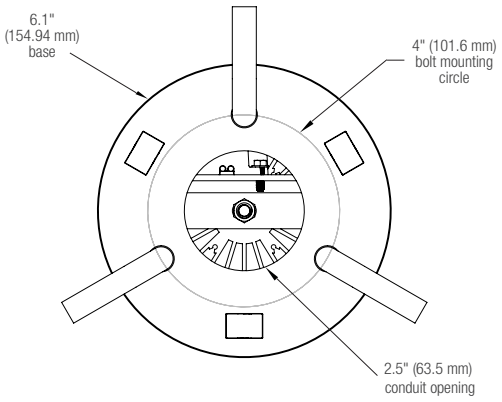

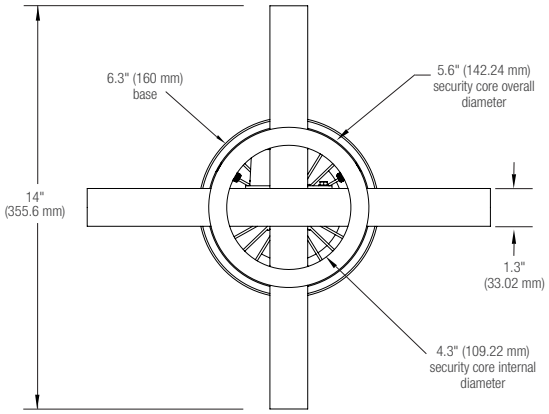

© 2022 Forms+Surfaces® | All dimensions are nominal. Specifications and pricing subject to change without notice. For the most current version of this document, please refer to our website at www.forms-surfaces.com.

NON-ILLUMINATED BOLLARDS

NOMINAL DIMENSIONS

SURFACE MOUNT WITH J-BOLTS

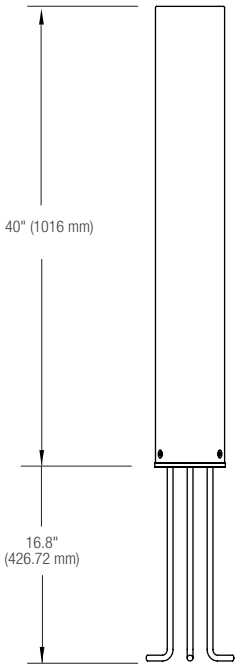

EMBEDDED SECURITY CORE

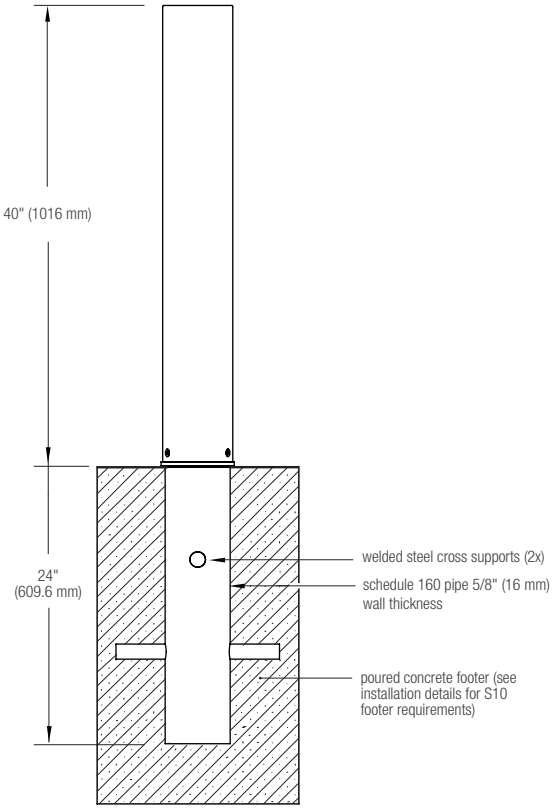

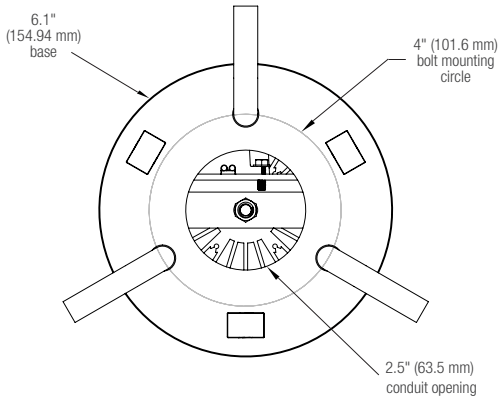

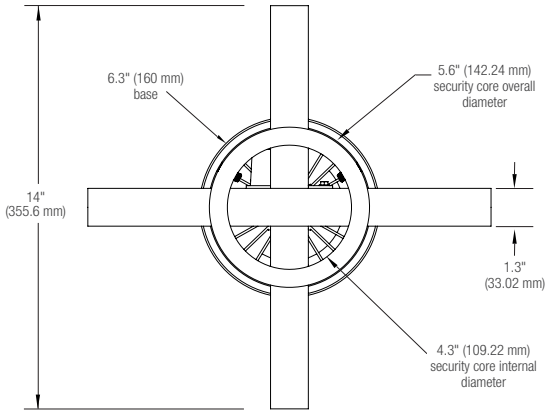

© 2022 Forms+Surfaces® | All dimensions are nominal. Specifications and pricing subject to change without notice. For the most current version of this document, please refer to our website at www.forms-surfaces.com.

OPTIONAL SECURITY CORE

Site security is a major concern in today's unpredictable world. Public and private buildings, government facilities, campuses and public parks are all susceptible to accidental, as well as deliberate, vehicle infringement. Design professionals, city planners, facilities managers and engineers must now be increasingly sensitive to the safety and security requirements of public and private spaces. Security bollards placed at ingress points are an excellent way to guard against vehicle infringement while allowing pedestrian access.

Most security bollards have taken the form of generic pipes and cylinders that offered little in the way of design or lighting functionality. An integral security solution is available as an optional enhancement to Forms+Surfaces' Helio lighting bollards. By adding a pre-engineered and fully-tested security core to the existing Helio design, we can offer a beautiful and efficient lighting bollard that also meets the stringent hi-impact crash requirements normally attained only with unattractive pipe barriers.

Helio S10-P1 security bollards have been tested using a Finite Element Analysis (FEA) by a professional engineering consultant. FEA is a software-based tool commonly used in the automotive industry and used extensively for crash test simulations. Tests were performed using our bollard set in permanent concrete footings and struck by a vehicle at a 90 degree impact. The impact simulation found the bollards to be successful in stopping a 5,000 lb. small passenger vehicle going 10 mph with less than one meter penetration.

Our permanently embedded security cores are available for both illuminated and non-illuminated bollards. Please contact us to discuss design and installation considerations for Helio bollards with security cores.

CERTIFICATION

- ETL and C-ETL listed for wet locations.
- Helio Bollard 3000K is International DarkSky Approved

ENVIRONMENTAL CONSIDERATIONS

- Please refer to the Helio Bollard, Series 600 Environmental Data Sheets for detailed environmental impact information.
- Metal components have a long life cycle and are 100% recyclable.
- Standard powdercoat finishes are no-VOC; non-standard powdercoat finishes are no- or low-VOC, depending on color.
- Low maintenance.

MODEL NUMBERS AND DESCRIPTIONS

MODEL	DESCRIPTION
LBHLO-603	Helio Bollard, Series 600, illuminated
LBHLO-603-N	Helio Bollard, Series 600, non-illuminated

PRODUCT OPTIONS

The following options are available for an upcharge

Add powdercoat color from Forms+Surfaces Powdercoat Chart	Upgrade to embedded security core
Custom RAL powdercoat color	Add stainless steel mounting hardware

© 2022 Forms+Surfaces® | All dimensions are nominal. Specifications and pricing subject to change without notice. For the most current version of this document, please refer to our website at www.forms-surfaces.com.

LEAD TIME: 6 to 8 weeks. Shorter lead times may be available upon request. Please contact us to discuss your specific timing requirements.

PRICING: Please contact us at **800.451.0410** or **sales@forms-surfaces.com**. At Forms+Surfaces, we design, manufacture and sell our products directly to you. Our sales team is available to assist you with questions about our products, requests for quotes, and orders. Territory Managers are located worldwide to assist with the front-end specification and quoting process, and our in-house Project Sales Coordinators follow your project through from the time you place an order to shipment.

TO ORDER SPECIFY: Quantity, finish, color temperature, and light distribution option. Quote/Order Forms are available on our website to lead you through the specification process in a simple checkbox format.

© 2022 Forms+Surfaces® | All dimensions are nominal. Specifications and pricing subject to change without notice. For the most current version of this document, please refer to our website at www.forms-surfaces.com.

JUNO

Project:

Fixture Type: LE-1

Location:

Contact/Phone:

4" IC 600 LUMEN LED DOWNLIGHT NEW CONSTRUCTION

IC1LED (G4 06LM) RECESSED HOUSING

HYPERBOLIC TRIMS

PRODUCT DESCRIPTION

Dedicated LED, Air-Loc® sealed new construction housing with integral light engine • Double wall, shallow housing construction allows for fit in 2 x 6 construction • Can be completely covered with insulation • Fully sealed housing stops infiltration and exfiltration of air, reducing heating and air cooling costs without the use of additional gaskets • LED housing is designed to provide 50,000 hours of life and is compatible with many standard Juno trims • 5 year limited warranty on LED components.



ENVIRONMENTALLY FRIENDLY, ENERGY EFFICIENT

- No harmful ultraviolet or infrared wavelengths
- No lead or mercury, RoHS compliant
- Comparable light output to 65W incandescent

PRODUCT SPECIFICATIONS

LED Light Engine LED array attached to high purity aluminum, thermally conductive inner housing provides superior heat transfer to ensure long life of the LED • Replaceable light engine mounts directly to inner housing assembly and incorporates the latest generation, high lumen output LED array • LEDs are binned within a 3-step MacAdam Ellipse exceeding ENERGY STAR® requirements for superior fixture to fixture color uniformity • 2700K, 3000K, 3500K, or 4000K color temperatures available • 90 CRI minimum.

Hyperbolic Optical System Patented (U.S. Patent No. 10,670,227 B2) hyperbolic reflector optimized for small, directional LED source provides unique aperture appearance with reduced brightness • NMC™ nano mixing chamber (provided with trim) with high reflectance white finish coupled with a high transmission diffusing lens conceals the LED and integrates with the hyperbolic trim to create a low glare, efficient system producing 600 lumens using less than 9W*.

Aesthetic Trim Selections Patented (U.S. Patent No. 10,670,227 B2) hyperbolic reflector available in clear Alzak®, haze, wheat haze, black Alzak® and white • Shadow free, knife edge design blends seamlessly into ceiling • Installs with push-in springs.

LED Driver Choice of dedicated 120 volt (120) driver or universal voltage (MVOLT) drivers that accommodate input voltages from 120-277 volts AC at 50/60Hz • Power factor > 0.9 at 120V input • 120 volt only driver is dimmable with the use of most incandescent, magnetic low voltage and electronic low voltage wall box dimmers • Universal voltage drivers are dimmable with the use of most 0-10V wall box dimmers • For a list of compatible dimmers,see JUNOICLED-DIM • Mounted inside housing for easy access from below ceiling

Life Rated for 50,000 hours at 70% lumen maintenance.

Labels ENERGY STAR® Certified when used with select trims • Can be used to comply with 2019 Title 24, Part 6, JA8 high efficacy LED light source requirements with select trims • UL listed for U.S. and Canada through-branch wiring, damp locations • Union made • UL and cUL • CP option is compatible with spray foam insulation with an R-value of 3.2 per inch or less.

Testing All reports are based on published industry procedures; field performance may differ from laboratory performance.

Specifications subject to change without notice.

HOUSING FEATURES

Housing Designed for use in IC (insulated ceiling) or non-IC construction • Aluminum housing sealed for Air-Loc® compliance • Housing is vertically adjustable to accommodate up to a 1 1/2" ceiling thickness.

Junction Box Pre-wired junction box provided with (6) 1/2" and (1) 3/4" knockouts, (4) knockouts for 12/2 or 14/2 NM cable and ground wire • UL listed and cUL listed for through-branch wiring, maximum 6 #12 branch circuit conductors • Junction box provided with removable access plates • Knockouts equipped with pryout slots • Quick connect electrical connectors supplied as standard for fast, secure installation.

Mounting Frame 22-gauge die-formed galvanized steel mounting frame • Rough-in section (junction box, mounting frame, housing and bar hangers) fully assembled for ease of installation.

Real Nail 3 Bar Hangers Patented (US Patent D552,969) Real Nail® 3 bar hangers: telescoping system permits quick placement of housing anywhere within 24" O.C. joists or suspended ceilings • Includes removable nail for repositioning of fixture in wood joist construction • Integral T-bar notch and clip for suspended ceilings.

*Nominal input wattage @ 120-volt operation with dedicated 120-volt driver under stable operating conditions.

DIMENSIONS

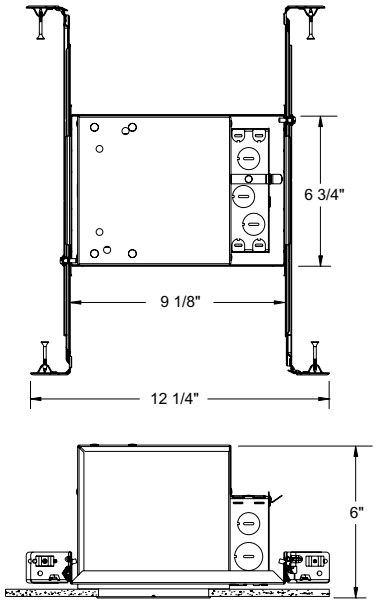

4 1/2" CEILING CUTOUT

4" IC 600 LUMEN LED DOWNLIGHT NEW CONSTRUCTION

IC1LED (G4 06LM) RECESSED HOUSING

HYPERBOLIC TRIMS

ELECTRICAL DATA

Dedicated 120V Only Driver Option (120 FRPC)

	120V
Input Power	8.6W (+/-5%)
Input Current	0.07A
Frequency	50/60Hz
EMI/RFI	FCC Title 47 CFR, Part 15, Class B (residential)
Minimum starting temp	-25°C

ELECTRICAL DATA

Universal Voltage

	MVOLT EZ10 and EZ1		MVOLT ZT10 and ZT1	
	120V	277V	120V	277V
Input Power	8.3W (+/-5%)	8.9W (+/-5%)	8.3W (+/-5%)	8.9W (+/-5%)
Input Current	0.07A	0.03A	0.07A	0.03A
Frequency	50/60Hz	50/60Hz	50/60Hz	50/60Hz
EMI/RFI	FCC Title 47 CFR, Part 15, Class B (residential)	FCC Title 47 CFR, Part 15, Class B (residential)	FCC Title 47 CFR, Part 15, Class B (residential)	FCC Title 47 CFR, Part 15, Class B (residential)
Minimum starting temp	-20°C	-20°C	-20°C	-20°C

ORDERING INFORMATION

Housing and trim can be ordered together or separate, but will always ship separately.

Example: IC1LED G4 06LM 27K 90CRI 120 FRPC

Series	Generation	Lumens	Color Temperature	CRI	Voltage/Driver	Territory
IC1LED 4" LED IC New Construction Downlight	**G4** Generation 4	**06LM** 600 Nominal Lumens	**27K** 2700K	**90CRI** 90+ CRI	**120 FRPC** 120V Forward/Reverse Phase Cut, 5% dim	**CP** Chicago Plenum
			30K 3000K		**MVOLT ZT10** Multi-Volt (120-277), 0-10V, 10% dim	
			35K 3500K		**MVOLT ZT1** Multi-Volt (120-277), 0-10V, 1% dim	
			40K 4000K		**MVOLT EZ10** Multi-Volt (120-277), eldoLED 0-10V, 10% dim	
					MVOLT EZ1 Multi-Volt (120-277), eldoLED 0-10V, 1% dim	

A+ Capable options indicated by this color background

Trim/Description



17HYP2 BWH[1]	4" Hyperbolic Cone Trim - Black Cone, White Trim Ring
17HYP2 CWH	4" Hyperbolic Cone Trim - Clear Alzak® Cone, White Trim Ring
17HYP2 HZWH	4" Hyperbolic Cone Trim - Haze Cone, White Trim Ring
17HYP2 WHZBRZ[1]	4" Hyperbolic Cone Trim - Wheat Haze Cone, Bronze Trim Ring
17HYP2 WHZWH[1]	4" Hyperbolic Cone Trim - Wheat Haze, White Trim Ring
17HYP2 WWH[2]	4" Hyperbolic Cone Trim - White, White Trim Ring

Trim Size: 5" O.D.
Alzak is a registered trademark of Alcoa Corp.
Note: In Canada when insulation is present, Type IC fixtures must be used.

[1] Not ENERGY STAR® Certified or T24 certified
[2] ENERGY STAR® Certified and T24 certified @ 30K with 120 driver and @ 35K, 40K with all drivers

©2017-2022 Acuity Brands Lighting, Inc.

4" IC 600 LUMEN LED DOWNLIGHT NEW CONSTRUCTION

IC1LED (G4 06LM) RECESSED HOUSING

HYPERBOLIC TRIMS

PHOTOMETRICS

PHOTOMETRIC REPORT

Test Report #: PT06140404
Catalog No: IC1LED G4 06LM 35K 90CRI 120 with 17HYP2 HZWH Trim and standard nano mixing chamber
Luminaire Spacing Criterion: 0.62
Luminaire LPW: 67

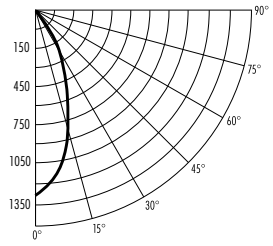

CANDLEPOWER DISTRIBUTION (Candelas)

Degrees Vertical	0°
0	1329
5	1233
15	826
25	442
35	44
45	3
55	0
65	0
75	0
85	0
90	0

Multiplier: 27K - 0.89
30K - 0.94
40K - 1.03

AVERAGE INITIAL FOOTCANDLES

Multiple Units (Square Array, 60'x60' room)
Ceiling 80% Wall 50% Floor 20%

Spacing	RCR1	RCR3	RCR5
4.0´	40	36	33
5.0´	26	23	21
6.0´	18	16	15
7.0´	14	13	12
8.0´	11	10	9
9.0´	9	8	7
10.0´	6	6	5

ZONAL LUMEN SUMMARY

Zone	Lumens	%Lamp	%Fixture
0 - 30°	533	N/A	92.8
0 - 40°	571	N/A	99.4
0 - 60°	574	N/A	100.0
0 - 90°	574	N/A	100.0

INITIAL FOOTCANDLES (One Unit, 8.6W , 38.3° Beam)

Distance to Illuminated Plane (Feet)	Footcandles Beam Center	Beam Diameter
4	83.1	2.8′
6	36.9	4.2′
8	20.8	5.6′
10	13.3	6.9′

LUMINANCE (Average cd/m²)

Degrees	Average Luminance
45	691
55	33
65	0
75	0
85	0

PHOTOMETRIC REPORT

Test Report #: PT06140402
Catalog No: IC1LED G4 06LM 35K 90CRI 120 with 17HYP2 CWH Trim and standard nano mixing chamber
Luminaire Spacing Criterion: 0.56
Luminaire LPW: 70

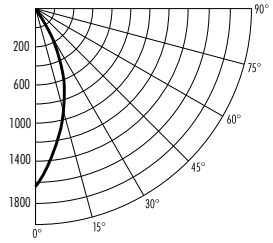

CANDLEPOWER DISTRIBUTION (Candelas)

Degrees Vertical	0°
0	1627
5	1457
15	918
25	438
35	26
45	1
55	0
65	0
75	0
85	0
90	0

Multiplier: 27K - 0.89
30K - 0.94
40K - 1.03

AVERAGE INITIAL FOOTCANDLES

Multiple Units (Square Array, 60'x60' room)
Ceiling 80% Wall 50% Floor 20%

Spacing	RCR1	RCR3	RCR5
4.0´	42	38	35
5.0´	27	24	22
6.0´	19	17	15
7.0´	15	14	13
8.0´	12	11	10
9.0´	9	8	8
10.0´	7	6	6

ZONAL LUMEN SUMMARY

Zone	Lumens	%Lamp	%Fixture
0 - 30°	575	N/A	95.0
0 - 40°	604	N/A	99.9
0 - 60°	605	N/A	100.0
0 - 90°	605	N/A	100.0

INITIAL FOOTCANDLES (One Unit, 8.6W , 34.2° Beam)

Distance to Illuminated Plane (Feet)	Footcandles Beam Center	Beam Diameter
4	101.7	2.5′
6	45.2	3.7′
8	25.4	4.9′
10	16.3	6.2′

LUMINANCE (Average cd/m²)

Degrees	Average Luminance
45	212
55	0
65	0
75	0
85	0

Fixtures tested to IES recommended standard for solid state lighting per LM-79-08. Photometric performance on a single unit represents a baseline of performance for the fixture. Results may vary in the field.

©2017-2022 Acuity Brands Lighting, Inc.

PLATE OUT DOUBLE 3450

SL-1

PROJECT PROJET

SPEC TYPE

NOTES



OPTIONS

WHE



BLKE

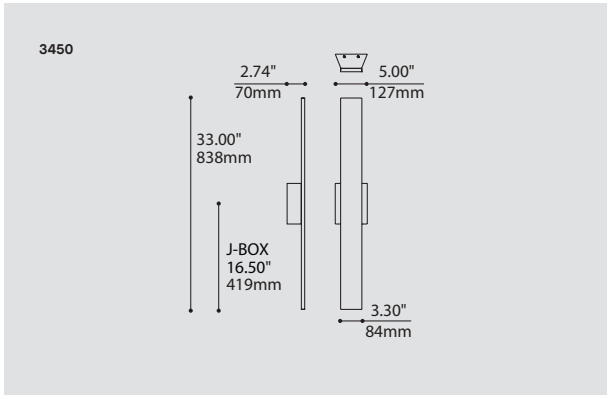

ORDERING SPECIFICATION SPÉCIFICATION DE COMMANDE — CODE

MODEL MODÈLE		**3450**
3450	PLATE OUT DOUBLE	
LIGHT SOURCE SOURCE LUMINEUSE		
(WATTAGE, LAMP TYPE, OTHER INFO)		
LED	REGULAR OUTPUT	
LED.HO	HIGH OUTPUT	
COLOR TEMPERATURE TEMPÉRATURE DE COULEUR		
27*	2700K	
30	3000K	
35	3500K	
40	4000K	
* LONGER LEAD TIME MAY APPLY, PLEASE CONTACT YOUR EUREKA REPRESENTATIVE		
VOLTAGE VOLTAGE		
120V	120 VOLT	
277V	277 VOLT	
DIMMING OPTION OPTION DE GRADATION		
DV	0-10V DIMMING (120-277V)	
HOUSING BOITIER		
WHE	WHITE FINE TEXTURE	
ANTE	ANTHRACITE FINE TEXTURE	
BLKE	BLACK FINE TEXTURE	

PRODUCT CHARACTERISTICS CARACTÉRISTIQUES DU PRODUIT

ADA BIM DIM IES LED

DESIGN: Designed for use in corridors and public areas, these wall mounted indirect luminaires are outdoor versions of our Plate and are built to be rugged and withstand the elements. They are available in a classic simple version or with the extended double light source version. Both are ADA compliant and can be used indoors.

LIGHT SOURCE: Linear LED strip with self-modulating temperature control for an optimal performance and lifetime. Available with standard 0-10V dimming.

CONSTRUCTION CNC machined aluminum, die-stamped galvanized steel and four levels of die-cut silicone gaskets for secure weather resistance.

DIFFUSER: Translucent frosted acrylic.

CERTIFIED: CSA Listed to US and Canadian safety standards; 25°C ambient and wet-locations. IP65 rated

CONCEPTION: Conçues pour être utilisées dans les couloirs et espaces publics, ces appliques murales à éclairage indirect sont des versions extérieures de notre Plate et sont conçues pour être robustes et résister aux intempéries. Elles sont offertes en version simple et en version étendue avec source lumineuse doublée. Elles sont conformes à la norme ADA et peuvent être installées à l'intérieur.

SOURCE LUMINEUSE: Bande lumineuse DEL avec autocontrôle de température pour une performance et durée de vie optimale. Offert avec gradation standard 0-10V.

CONSTRUCTION: Aluminium usiné par contrôle numérique, acier galvanisé découpé et plié avec les joints d'étanchéité en silicone comprimé pour résister aux intempéries.

DIFFUSEUR: Acrylique givré translucide.

CERTIFIÉ: Homologué CSA aux standards UL Canada et É.-U. - Température ambiante 25°C et emplacements mouillés. Conforme à la norme IP65

Eureka Lighting © 2021

PLATE OUT 3449/3450

DESIGNED FOR
CONÇU POUR **IP65**

CONTACT EUREKA FOR MORE INFORMATION
CONTACTEZ EUREKA POUR PLUS D'INFORMATIONS

3449

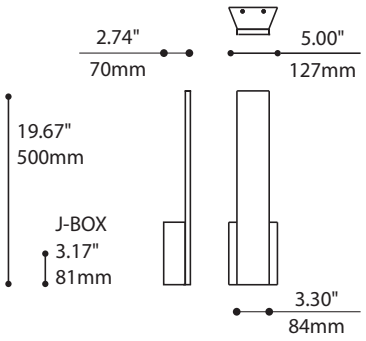

3450

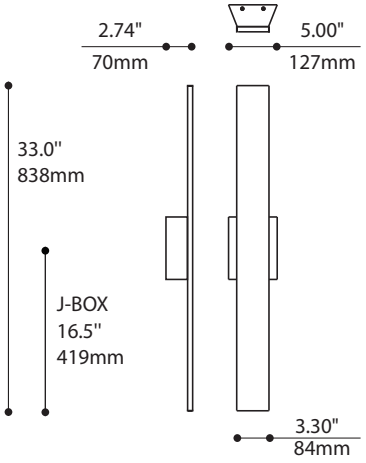

ALUMINUM STRUCTURE
Natural heat-sink
CNC machined with fine textured exterior polyester finish

LED LIGHT ENGINE
ANSI binned white LED with on-board thermal management located inside of aluminum structure

MOUNTING FASTENERS

DRIVER HOUSING
Fits regular drivers
Easy mounting installation

WEATHERPROOF
Self-adhesive gaskets
Die-cut silicone sponges
Fully sealed
Wet location rated

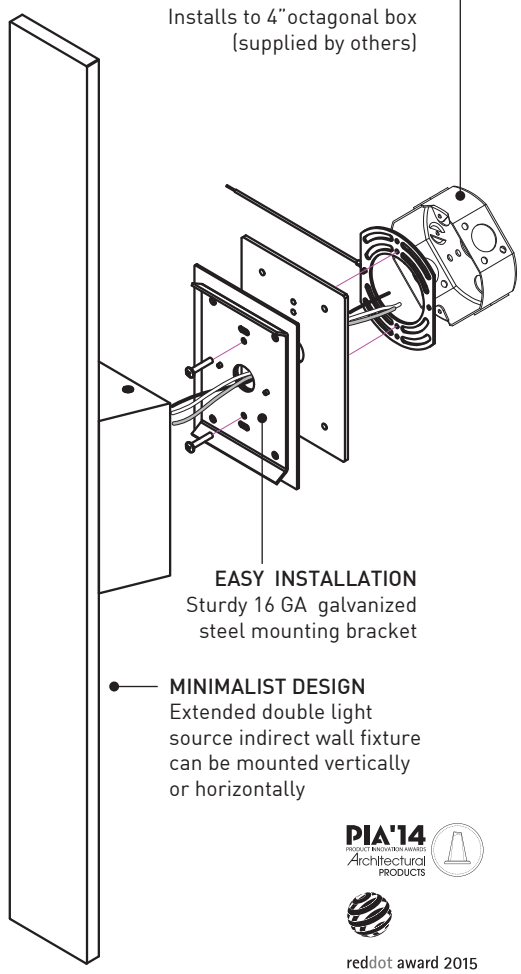

MOUNTING
Installs to 4"octagonal box (supplied by others)

EASY INSTALLATION
Sturdy 16 GA galvanized steel mounting bracket

MINIMALIST DESIGN
Extended double light source indirect wall fixture can be mounted vertically or horizontally

PIA'14 Architectural Products

reddot award 2015 winner

PRODUCT SPECIFICATION	3449 - REG	3449 - HO	3450 - REG	3450 - HO
PERFORMANCE				
SYSTEM WATTAGE	4.9 W	7.3 W	9.9 W	14.6 W
DELIVERED LUMENS (4000K)	394 LM	562 LM	787 LM	1124 LM
EFFICACY	80.4 LM/W	76.9 LM/W	79.5 LM/W	76.9 LM/W
OTHER INFORMATIONS				
LUMINAIRE'S WEIGHT	6,53LBS LBS / 2.97 KG	6,53LBS LBS / 2.97 KG	8.45 LBS LBS / 3.84 KG	8.45 LBS / 3.84 KG
L70 (LUMEN MAINTENANCE)	> 60 000 HRS	> 60 000 HRS	> 60 000 HRS	> 60 000 HRS

EFFICACY MULTIPLIERS

CRI	CCT	FACTOR
80+	4000K	1.00
80+	3500K	0.98
80+	3000K	0.94
80+	2700K	0.91
90+	4000K	0.88
90+	3500K	0.85
90+	3000K	0.81
90+	2700K	0.77

LIGHT DISTRIBUTION

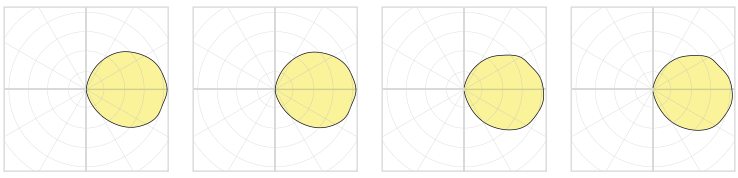

3449-REG | 3449-HO | 3450-REG | 3450-HO

5 years warranty

Visit our website for warranty terms and conditions.

EUREKA

TECHNICAL DATA

All right reserved and all designs protected by copyrights. Eureka Lighting reserves the right to change or modify specification without notification.

PLATE OUT 3449/3450

DESIGNED FOR
CONÇU POUR **IP65**

CONTACT EUREKA FOR MORE INFORMATION
CONTACTEZ EUREKA POUR PLUS D'INFORMATIONS

3449

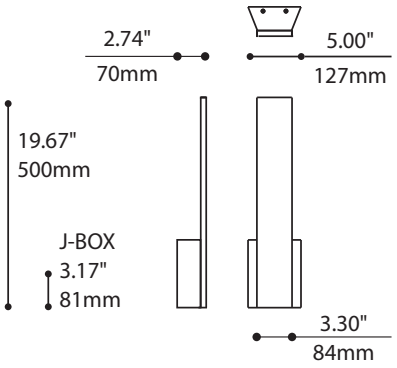

3450

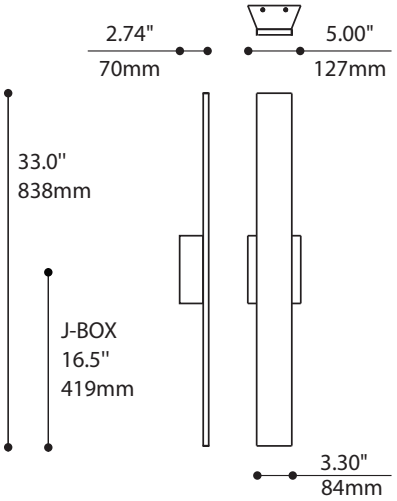

STRUCTURE D'ALUMINIUM
Pièces usinées par contrôle numérique fonctionnant comme dissipateur thermique et peinturées à base de polyester fine texture

SOURCE LUMINEUSE À DEL
Bandes DEL blanches offertes avec un dissipateur thermique intégré, localisées à l'intérieur de la structure en aluminium

VIS DE SÉCURITÉ CACHÉS

BOÎTIER DE LUMINAIRE
Convient aux pilotes de DEL avec un système d'installation facile

RÉSISTE AUX INTEMPÉRIES
Joints d'étanchéité autocollants
Silicone éponges découpées
Scellage complet
Convient aux endroits mouillés



SYSTÈME DE MONTAGE
Convient à la boîte de jonction octogone 4" (non incluse)

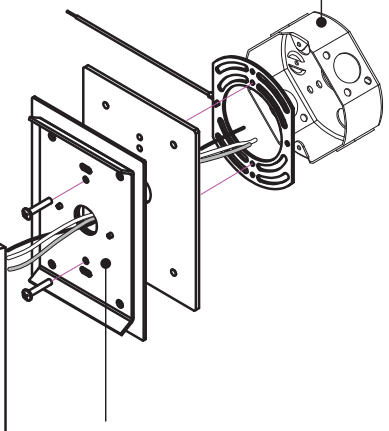

INSTALLATION SOLIDE
Plaque murale en acier galvanisé 16 GA

DESIGN MINIMALISTE
Version à double source lumineuse indirecte pouvant être montée verticalement ou horizontalement

PIA'14 Product Innovation Awards Architectural Products

reddot award 2015 winner

reddot 21 world of design

SPÉCIFICATION PRODUIT	3449 - REG	3449 - HO	3450 - REG	3450 - HO
PERFORMANCE				
PUISSANCE TOTALE	4.9 W	7.3 W	9.9 W	14.6 W
LUMENS RÉELS (4000K)	394 LM	562 LM	787 LM	1124 LM
EFFICACITÉ	80.4 LM/W	76.9 LM/W	79.5 LM/W	76.9 LM/W
AUTRES INFORMATIONS				
POIDS PAR TÊTE	6,53LBS LBS / 2.97 KG	6,53LBS LBS / 2.97 KG	8.45 LBS LBS / 3.84 KG	8.45 LBS / 3.84 KG
L70 (MAINTENANCE DE LA LUMIÈRE)	> 60 000 H	> 60 000 H	> 60 000 H	> 60 000 H

FACTEUR D'EFFICACITÉ

IRC	CCT	FACTEUR
80+	4000K	1.00
80+	3500K	0.98
80+	3000K	0.94
80+	2700K	0.91
90+	4000K	0.88
90+	3500K	0.85
90+	3000K	0.81
90+	2700K	0.77

DISTRIBUTION LUMINEUSE

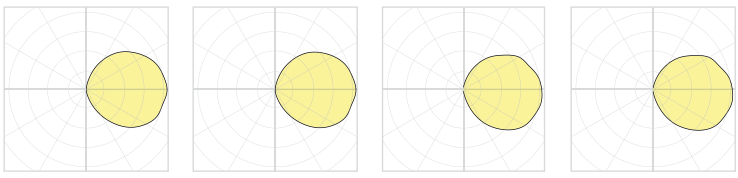

3449-REG **3449-HO** **3450-REG** **3450-HO**

5 ans de garantie

Visitez notre site Web pour les termes et conditions.

EUREKA

DONNÉES TECHNIQUES

Tous droits réservés et tous les dessins protégés par le droit d'auteur. Eureka Lighting se réserve le droit de changer ou de modifier les spécifications sans préavis.

PLATE OUT DOUBLE 3450

SL-2

PROJECT PROJET

SPEC TYPE

NOTES



OPTIONS

WHE



BLKE

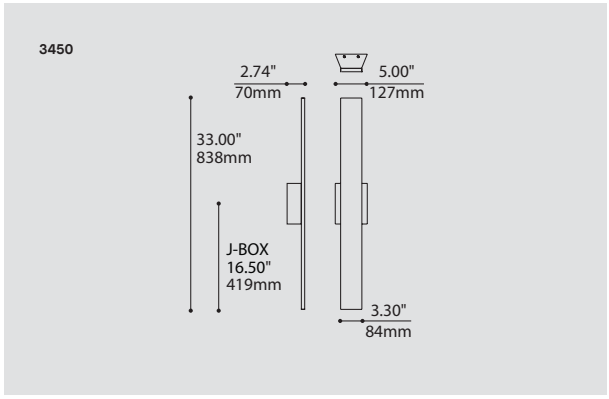

ORDERING SPECIFICATION SPÉCIFICATION DE COMMANDE — CODE

MODEL MODÈLE		**3450**
3450	PLATE OUT DOUBLE	
LIGHT SOURCE SOURCE LUMINEUSE		
(WATTAGE, LAMP TYPE, OTHER INFO)		
LED	REGULAR OUTPUT	
LED.HO	HIGH OUTPUT	
COLOR TEMPERATURE TEMPÉRATURE DE COULEUR		
27*	2700K	
30	3000K	
35	3500K	
40	4000K	
* LONGER LEAD TIME MAY APPLY, PLEASE CONTACT YOUR EUREKA REPRESENTATIVE		
VOLTAGE VOLTAGE		
120V	120 VOLT	
277V	277 VOLT	
DIMMING OPTION OPTION DE GRADATION		
DV	0-10V DIMMING (120-277V)	
HOUSING BOITIER		
WHE	WHITE FINE TEXTURE	
ANTE	ANTHRACITE FINE TEXTURE	
BLKE	BLACK FINE TEXTURE	

PRODUCT CHARACTERISTICS CARACTÉRISTIQUES DU PRODUIT

ADA BIM DIM IES LED

DESIGN: Designed for use in corridors and public areas, these wall mounted indirect luminaires are outdoor versions of our Plate and are built to be rugged and withstand the elements. They are available in a classic simple version or with the extended double light source version. Both are ADA compliant and can be used indoors.

LIGHT SOURCE: Linear LED strip with self-modulating temperature control for an optimal performance and lifetime. Available with standard 0-10V dimming.

CONSTRUCTION CNC machined aluminum, die-stamped galvanized steel and four levels of die-cut silicone gaskets for secure weather resistance.

DIFFUSER: Translucent frosted acrylic.

CERTIFIED: CSA Listed to US and Canadian safety standards; 25°C ambient and wet-locations. IP65 rated

CONCEPTION: Conçues pour être utilisées dans les couloirs et espaces publics, ces appliques murales à éclairage indirect sont des versions extérieures de notre Plate et sont conçues pour être robustes et résister aux intempéries. Elles sont offertes en version simple et en version étendue avec source lumineuse doublée. Elles sont conformes à la norme ADA et peuvent être installées à l'intérieur.

SOURCE LUMINEUSE: Bande lumineuse DEL avec autocontrôle de température pour une performance et durée de vie optimale. Offert avec gradation standard 0-10V.

CONSTRUCTION: Aluminium usiné par contrôle numérique, acier galvanisé découpé et plié avec les joints d'étanchéité en silicone comprimé pour résister aux intempéries.

DIFFUSEUR: Acrylique givré translucide.

CERTIFIÉ: Homologué CSA aux standards UL Canada et É.-U. - Température ambiante 25°C et emplacements mouillés. Conforme à la norme IP65

Eureka Lighting © 2021

PLATE OUT 3449/3450

DESIGNED FOR
CONÇU POUR **IP65**

CONTACT EUREKA FOR MORE INFORMATION
CONTACTEZ EUREKA POUR PLUS D'INFORMATIONS

3449

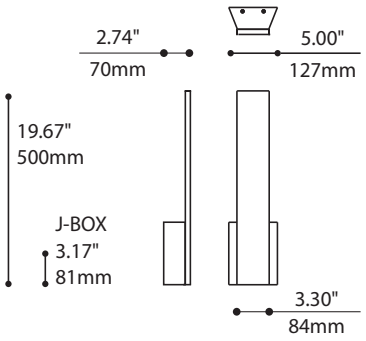

3450

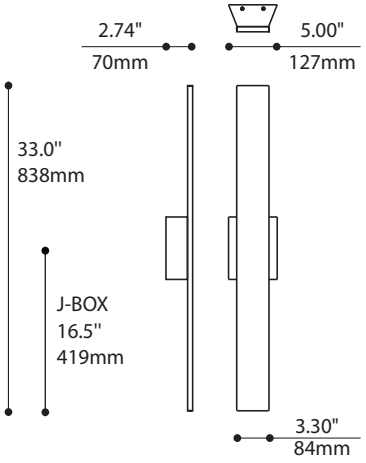

ALUMINUM STRUCTURE
Natural heat-sink
CNC machined with fine textured exterior polyester finish

LED LIGHT ENGINE
ANSI binned white LED with on-board thermal management located inside of aluminum structure

MOUNTING FASTENERS

DRIVER HOUSING
Fits regular drivers
Easy mounting installation

WEATHERPROOF
Self-adhesive gaskets
Die-cut silicone sponges
Fully sealed
Wet location rated

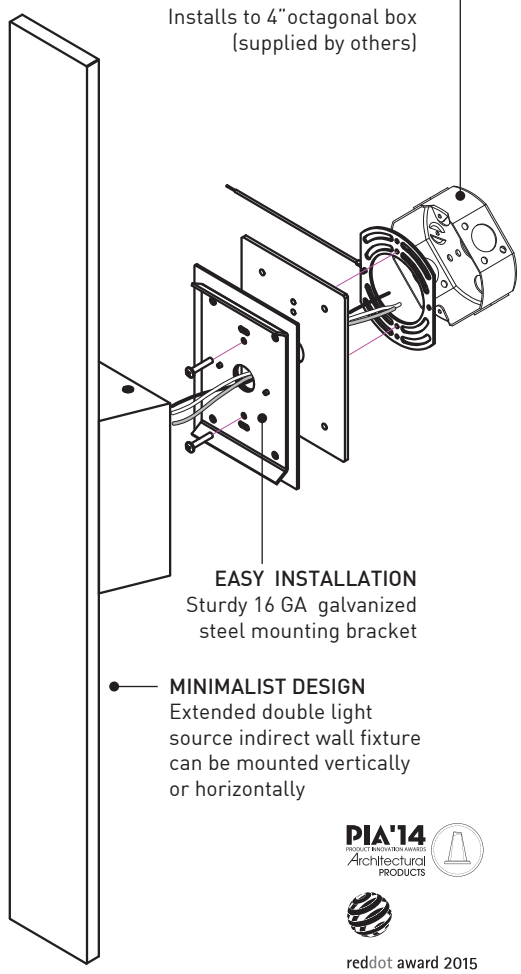

MOUNTING
Installs to 4"octagonal box (supplied by others)

EASY INSTALLATION
Sturdy 16 GA galvanized steel mounting bracket

MINIMALIST DESIGN
Extended double light source indirect wall fixture can be mounted vertically or horizontally

PIA'14 Architectural Products

reddot award 2015 winner

PRODUCT SPECIFICATION	3449 - REG	3449 - HO	3450 - REG	3450 - HO
PERFORMANCE				
SYSTEM WATTAGE	4.9 W	7.3 W	9.9 W	14.6 W
DELIVERED LUMENS (4000K)	394 LM	562 LM	787 LM	1124 LM
EFFICACY	80.4 LM/W	76.9 LM/W	79.5 LM/W	76.9 LM/W
OTHER INFORMATIONS				
LUMINAIRE'S WEIGHT	6,53LBS LBS / 2.97 KG	6,53LBS LBS / 2.97 KG	8.45 LBS LBS / 3.84 KG	8.45 LBS / 3.84 KG
L70 (LUMEN MAINTENANCE)	> 60 000 HRS	> 60 000 HRS	> 60 000 HRS	> 60 000 HRS

EFFICACY MULTIPLIERS

CRI	CCT	FACTOR
80+	4000K	1.00
80+	3500K	0.98
80+	3000K	0.94
80+	2700K	0.91
90+	4000K	0.88
90+	3500K	0.85
90+	3000K	0.81
90+	2700K	0.77

LIGHT DISTRIBUTION

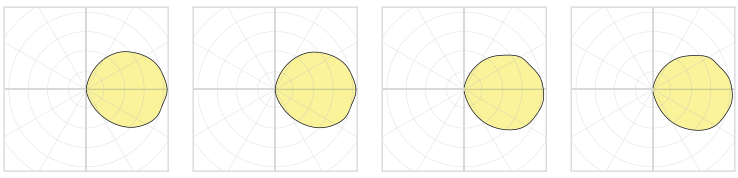

3449-REG | 3449-HO | 3450-REG | 3450-HO

5 years warranty

Visit our website for warranty terms and conditions.

EUREKA

TECHNICAL DATA

All right reserved and all designs protected by copyrights. Eureka Lighting reserves the right to change or modify specification without notification.

PLATE OUT 3449/3450

DESIGNED FOR
CONÇU POUR **IP65**

CONTACT EUREKA FOR MORE INFORMATION
CONTACTEZ EUREKA POUR PLUS D'INFORMATIONS

3449

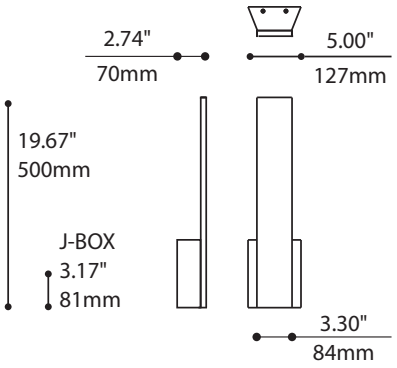

3450

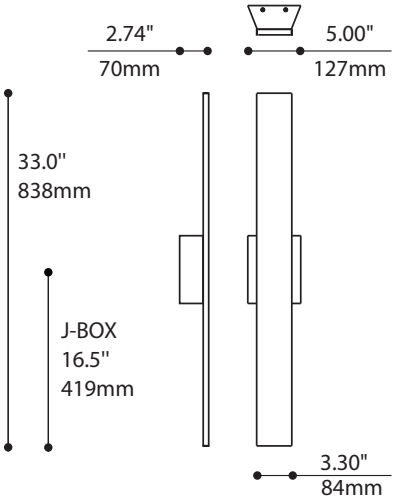

STRUCTURE D'ALUMINIUM
Pièces usinées par contrôle numérique fonctionnant comme dissipateur thermique et peinturées à base de polyester fine texture

SOURCE LUMINEUSE À DEL
Bandes DEL blanches offertes avec un dissipateur thermique intégré, localisées à l'intérieur de la structure en aluminium

VIS DE SÉCURITÉ CACHÉS

BOÎTIER DE LUMINAIRE
Convient aux pilotes de DEL avec un système d'installation facile

RÉSISTE AUX INTEMPÉRIES
Joints d'étanchéité autocollants
Silicone éponges découpées
Scellage complet
Convient aux endroits mouillés

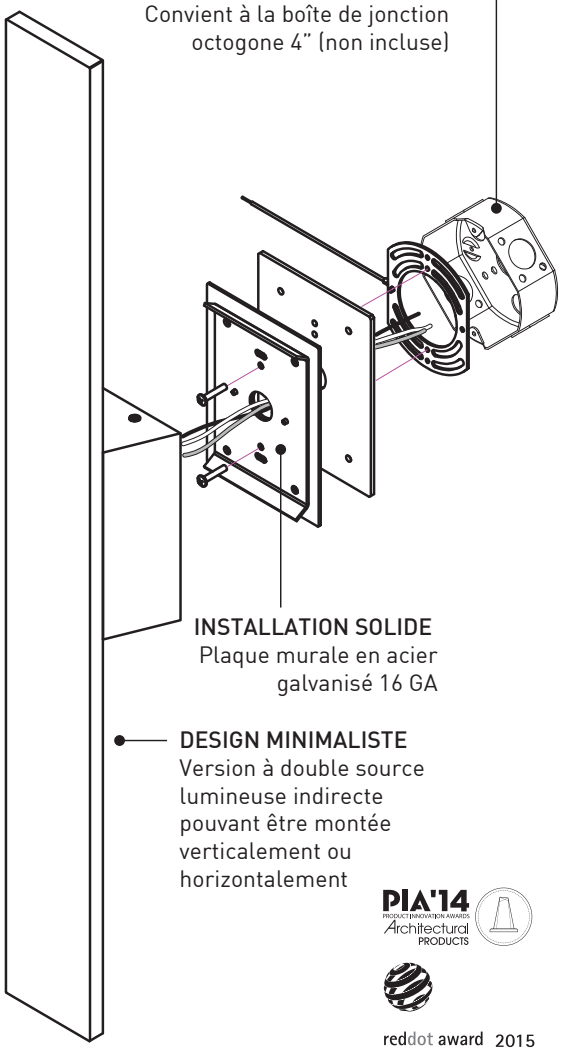

SYSTÈME DE MONTAGE
Convient à la boîte de jonction octogone 4" (non incluse)

INSTALLATION SOLIDE
Plaque murale en acier galvanisé 16 GA

DESIGN MINIMALISTE
Version à double source lumineuse indirecte pouvant être montée verticalement ou horizontalement

PIA'14 Product Innovation Awards Architectural Products

reddot award 2015 winner

reddot 21 world of design

SPÉCIFICATION PRODUIT	3449 - REG	3449 - HO	3450 - REG	3450 - HO
PERFORMANCE				
PUISSANCE TOTALE	4.9 W	7.3 W	9.9 W	14.6 W
LUMENS RÉELS (4000K)	394 LM	562 LM	787 LM	1124 LM
EFFICACITÉ	80.4 LM/W	76.9 LM/W	79.5 LM/W	76.9 LM/W
AUTRES INFORMATIONS				
POIDS PAR TÊTE	6,53LBS LBS / 2.97 KG	6,53LBS LBS / 2.97 KG	8.45 LBS LBS / 3.84 KG	8.45 LBS / 3.84 KG
L70 (MAINTENANCE DE LA LUMIÈRE)	> 60 000 H	> 60 000 H	> 60 000 H	> 60 000 H

FACTEUR D'EFFICACITÉ

IRC	CCT	FACTEUR
80+	4000K	1.00
80+	3500K	0.98
80+	3000K	0.94
80+	2700K	0.91
90+	4000K	0.88
90+	3500K	0.85
90+	3000K	0.81
90+	2700K	0.77

DISTRIBUTION LUMINEUSE

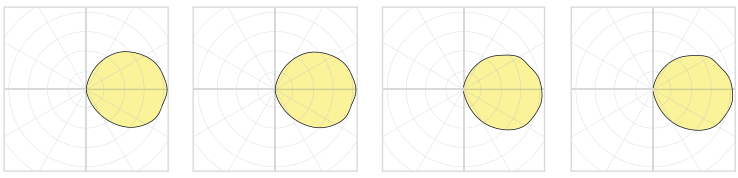

3449-REG **3449-HO** **3450-REG** **3450-HO**

c SA US FC 5 ans de garantie

Visitez notre site Web pour les termes et conditions.

EUREKA

DONNÉES TECHNIQUES

Tous droits réservés et tous les dessins protégés par le droit d'auteur. Eureka Lighting se réserve le droit de changer ou de modifier les spécifications sans préavis.

SHOP NOW

ALCON LIGHTING

Project Name: _____ Type: _____ Quantity: _____

FIXTURE SPECIFICATIONS

INTENDED USE

Add architectural-grade uplighting and downlighting to your commercial, hospitality and residential exterior walls. Our cylindrical sconces illuminate with elegance and versatility. Choose a nickel, black, bronze or white finish.

PRODUCT FAMILY

SHORT | Dia ø 4" x **H** 8" x **W** 5-3/4"
TALL | Dia ø 4" x **H** 12" x **W** 5-3/4"

FEATURES

Construction: Die-cast Aluminum
Color Temperature Switching: Capable of switching from 3 color temperatures: 3000K/4000K/5000K
Voltage: 120V AC
Dimming: TRIAC
Beam Spread: 45° Flood
CRI: 80
Maximum Ambient Temperature: -68°F to 104°F
Warranty: 7 Years Carefree for Parts & Components (Labor Not Included)
Listings: cETLus Listed, Suitable for Wet Locations, IP44



SHORT (1)
Down Light Only

TALL (2)
Up and Down Light

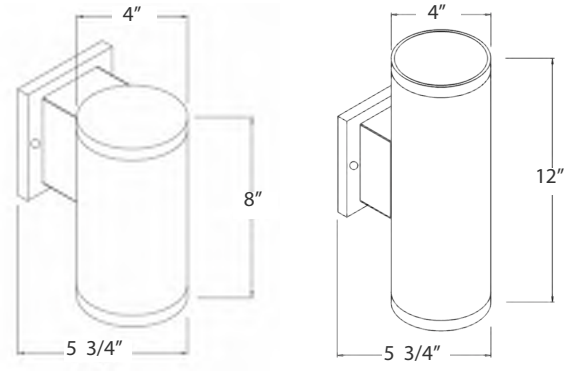



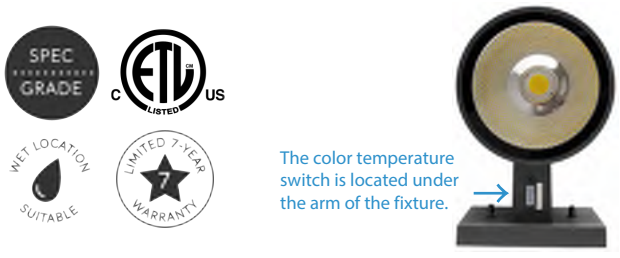

ORDERING INFORMATION Example: (11240-1-BK)

Model	Size | Light Direction | Wattage | Lumens	Finish
11240 Zen	**1** Short | Down Light Only | 15W | 1200lm **2** Tall | ~~Up and~~ Down Light | 30W | 2400lm	**BK** Black **WH** White **BR** Bronze **BN** Brushed Nickel

Photometrics: 11240-1 (Downlight)

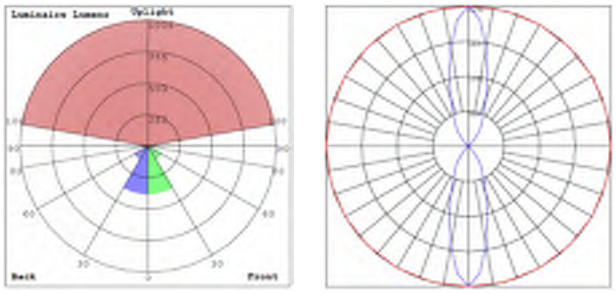

BUG Rating: B1-U5-G0

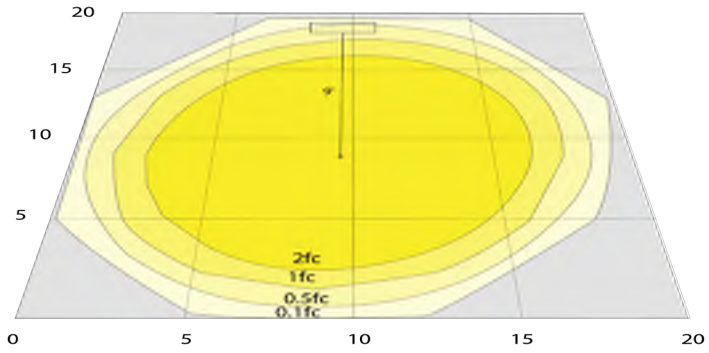

15W 5000K, Area 20'x 20' Mounting Height: 9'

Photometrics: 11240-2 (Up & Down Light)

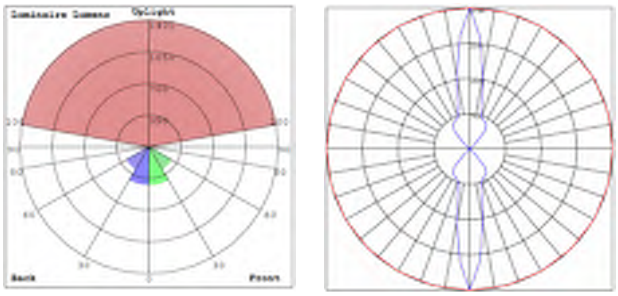

BUG Rating: B1-U5-G0

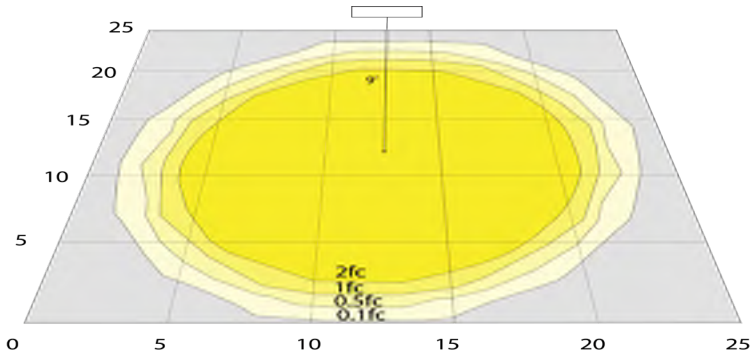

30W 5000K Area 25'x 25' Mounting Height: 9'

