SOUTH CENTRAL LIBRARY
CITY OF MADISON
DANE COUNTY
WISCONSIN

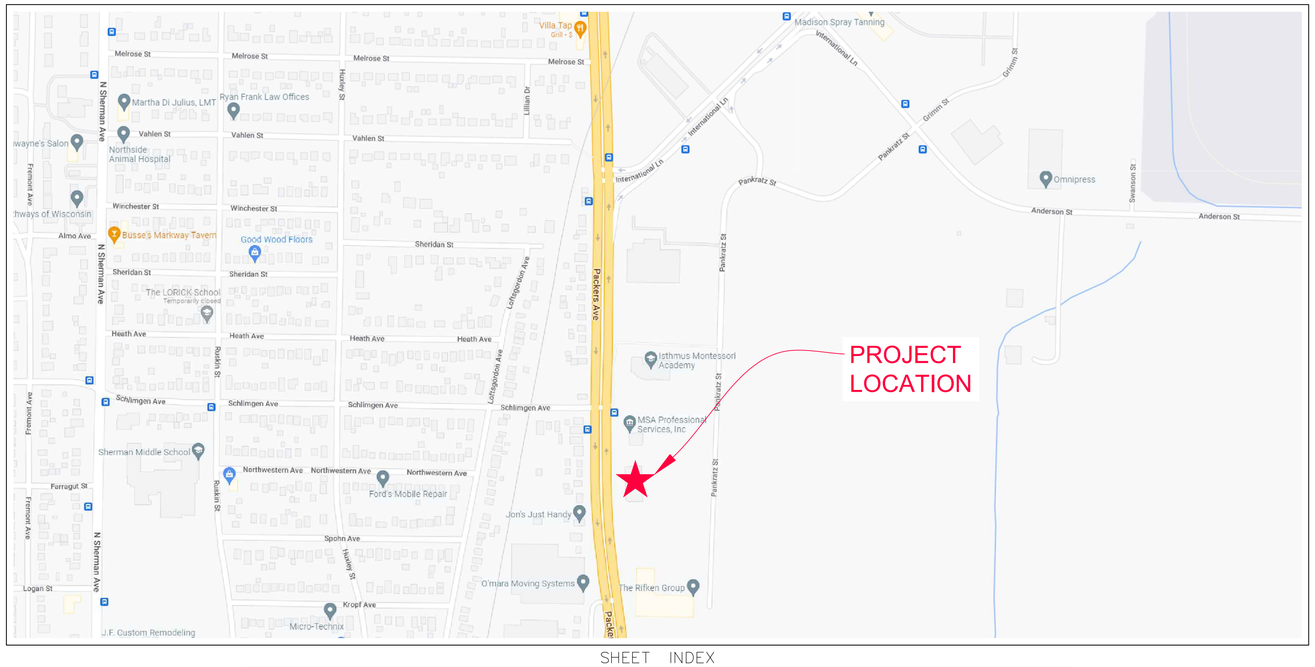

LOCATION MAP IS NOT TO SCALE

SHEET INDEX

SHEET NO.	DESCRIPTION
C1.0	COVER SHEET
C2.0	GENERAL NOTES
C3.0	EXISTING CONDITIONS
C4.0	DEMOLITION PLAN
C5.0	SITE PLAN
C6.0	GRADING & EROSION CONTROL PLAN
C7.0	UTILITY PLAN
C8.0 - C8.9	CONSTRUCTION DETAILS

ORIGINAL PLAN SET IS IN COLOR

Keller
PLANNERS | ARCHITECTS | BUILDERS

FOX CITIES
N216 State Road 55
P.O. Box 620
Kaukauna, WI 54130
Phone (920)766-5795
1-800-236-2534
Fax (920)766-5004

MADISON
3308 Nursery Drive
Middleton, WI 53562
Phone (608)445-2245

MILWAUKEE
W204 N11509
Goldendale Rd
Germantown, WI 53022
Phone (262)250-9710
1-800-236-2534
Fax (262)250-9740

WAUSAU
5605 Lilac Ave
Wausau, WI 54401
Phone (715)849-3141
Fax (715)849-3181

www.kellerbuilds.com

PROPOSED FOR: SOUTH CENTRAL LIBRARY MADISON WISCONSIN

"COPYRIGHT NOTICE"
This design, drawing and detail is the copyrighted property of KELLER, INC. No part hereof shall be copied, duplicated, distributed, disclosed or made available to anyone without the expressed written consent of KELLER, INC.

REVISIONS

OWNER:
SOUTH CENTRAL LIBRARY SYSTEM
4610 S. BILTMORE LN SUITE 101
MADISON, WI 53718

ENGINEER:
RUEKERT-MIELKE INC.
1400 LOMBARDI AVE, GREEN BAY, WI

R & M PROJECT #8341-10064.200
PROJECT MANAGER: COLIN MEISEL, PE
PHONE: (920) 876-6382

WISCONSIN COLIN L. MEISEL 41512 Appleton, WI PROFESSIONAL ENGINEER

PROJECT MANAGER: D. FLANIGAN
DESIGNER: C. MEISEL
DRAWN BY: G. DEPREY
EXPEDITOR: S. LAMON
SUPERVISOR: D. CRAKER
PRELIMINARY NO: _____
CONTRACT NO: _____
DATE: 12/19/2022
SHEET: C1.0

COVER SHEET

"ISSUED NOT FOR CONSTRUCTION"

Ruekert•Mielke
Waukesha • Kenosha • Madison
Global Water Center • Fox Valley
www.ruekertmielke.com

RUEKERT/MIELKE TAKES NO RESPONSIBILITY FOR ANY UNDERGROUND STRUCTURES OR BURIED MATERIALS SUCH AS, BUT NOT LIMITED TO, FOUNDATIONS, WELLS, SEPTIC, HOLDING TANKS, UTILITIES, HAZARDOUS MATERIALS, OR ANY OTHER ITEMS OF WHICH NO EVIDENCE CAN BE FOUND ON THE SURFACE BY A REASONABLE INSPECTION.

PURSUANT TO WISCONSIN STATUTE 182.0175, AVAILABLE DATA ON UNDERGROUND STRUCTURES, CONDUIT AND PIPES HAS BEEN SHOWN ON THIS MAP. THE LOCATIONS SHOWN HAVE BEEN COMPILED FROM A COMBINATION OF EXISTING UTILITY MAPS AND MARKINGS PLACED IN THE FIELD FOR THE VARIOUS FACILITIES BY "DIGGERS HOTLINE" (TICKET NO. 202114408347) SHALL NOT BE TAKEN AS CONCLUSIVE. FIELD VERIFICATION SHALL BE REQUIRED BEFORE ANY EXCAVATION.

GENERAL NOTES:

1. CONTRACTOR TO CONTACT DIGGERS HOTLINE FOR UTILITY LOCATES PRIOR TO CONSTRUCTION. CONTRACTOR SHALL VERIFY WITH UTILITY COMPANIES IF UTILITY COMPANY'S STAFF IS REQUIRED TO BE ON SITE WHEN CONSTRUCTION ACTIVITIES ARE NEAR UTILITY FACILITIES.
2. LOCATION OF ALL STRUCTURES, OBSTACLES, AND EXISTING FACILITIES SHOWN SHALL NOT BE TAKEN AS CONCLUSIVE. CONTRACTOR SHALL VERIFY LOCATIONS AS A CONDITION OF THEIR BID AND BE RESPONSIBLE FOR ALL DAMAGES RESULTING FROM THEIR ACTIVITIES.
3. CONTRACTOR SHALL TAKE CARE WHEN EXCAVATING AROUND EXISTING UTILITY LINES AND EQUIPMENT. VERIFY COVERAGE REQUIREMENTS WITH UTILITY COMPANIES.
4. EXISTING UTILITIES SHOWN ARE APPROXIMATE AND HAVE BEEN OBTAINED FROM AVAILABLE RESOURCES FOR FIELD LOCATES. THERE MAY BE ADDITIONAL UTILITIES NOT SHOWN. CONTRACTOR IS REQUIRED TO VERIFY LOCATION OF EXISTING UTILITIES.
5. CONTRACTOR SHALL BE RESPONSIBLE FOR OBTAINING ALL PERMITS NECESSARY TO CARRY OUT THEIR WORK, UNLESS OTHERWISE NOTED.
6. CONTRACTOR SHALL PROVIDE STAKING AS NECESSARY TO LAYOUT AND PROVIDE GRADES FOR ANY SECTION OF THE WORK.
7. A COMPETENT REPRESENTATIVE WHO HAS AUTHORITY TO ACT FOR THE CONTRACTOR MUST BE AT THE SITE AT ALL TIMES.
8. STAGING AND MATERIAL STORAGE AREAS SHALL BE COORDINATED WITH THE OWNER AND SHALL BE DONE IN A MANNER TO AVOID INTERFERENCE WITH THE OWNER'S ACTIVITIES.
9. CONTRACTOR SHALL BE RESPONSIBLE FOR PROTECTING ALL EXISTING PROPERTY CORNERS AND SURVEY MONUMENTS.
10. CONTRACTOR SHALL BE RESPONSIBLE FOR BARRICADING AREAS OF CONSTRUCTION TO PROTECT AGAINST PERSONAL INJURY.
11. EXISTING FACILITIES TO REMAIN INCLUDING PAVEMENT, SIDEWALKS, BUILDINGS, LANDSCAPING AND TREES SHALL BE PROTECTED DURING CONSTRUCTION.
12. CONTRACTOR SHALL BE RESPONSIBLE FOR PROTECTING THEIR WORK FROM ALL DAMAGE INCLUDING THE PUBLIC, OTHER CONTRACTORS, AND THE ENVIRONMENT.
13. EXCESS MATERIALS SHALL BE REMOVED FROM THE SITE UNLESS OTHERWISE DIRECTED BY THE OWNER.

UTILITIES AND STORM SEWER:

1. ALL EXISTING SURFACE INFRASTRUCTURE INCLUDING HYDRANTS, VALVES, HANDHOLES, CASTINGS, IRRIGATION SYSTEMS, AND UTILITY PEDESTALS ARE REQUIRED TO BE ADJUSTED TO PROPOSED GRADE BY CONTRACTOR.
2. WHERE NOT IDENTIFIED IN THE CIVIL SPECIFICATION MANUAL, UTILITY MATERIALS AND INSTALLATION SHALL CONFORM TO LOCAL STANDARDS AND SPECIFICATIONS FOR UTILITY COMPANIES HAVING JURISDICTION.
3. CONTRACTOR SHALL COORDINATE INSTALLATION OF UTILITIES AND CONDUITS TO AVOID CONFLICTS AND TO PROVIDE MINIMUM REQUIRED DEPTHS OF COVER. ADDITIONAL BENDS AND ASSOCIATED MATERIALS ARE TO BE INSTALLED AS REQUIRED FOR WATER MAINS AND LATERALS.
4. ALL STORM AND SANITARY SEWER PIPES AND STRUCTURES SHALL BE CONSTRUCTED IN ACCORDANCE WITH THE PROJECT CIVIL SPECIFICATIONS MANUAL AND SUPPLEMENTAL PLAN NOTES HEREIN.
5. STORM SEWER STRUCTURES SHALL BE PRECAST CONCRETE AND THE SIZE AS NOTED ON THE PLANS.
6. TRENCHES SHALL BE BACKFILLED WITH CRUSHED STONE BEDDING WITHIN 1:1 OF PAVEMENT AREAS AND WITH SPOIL IN LANDSCAPING AREAS.
7. STORM SEWER 8-INCHES OR SMALLER CONNECTED TO MAINS OR LATERALS SHALL BE PLACED HORIZONTALLY AT THE SPRING LINE OF THE PIPE WITH A WATER TIGHT CONNECTION.
8. CONNECTIONS TO EXISTING MANHOLES SHALL BE CORED AND A WATER TIGHT SEAL PROVIDED.
9. TRACER WIRE OR OTHER MEANS OF LOCATING UNDERGROUND PIPES SHALL BE INSTALLED ON ALL PIPING PER THE PROJECT CIVIL SPECIFICATIONS MANUAL.
10. ALL DIMENSIONS ARE TO THE CENTERLINE OF UTILITIES AND STRUCTURES.
11. ALL SANITARY, WATER, AND STORM SEWER UTILITY WORK PERFORMED IN THE RIGHT-OF-WAY SHALL BE PERFORMED IN ACCORDANCE WITH THE CITY OF MADISON STANDARD SPECIFICATIONS FOR PUBLIC WORKS CONSTRUCTION 2022 EDITION.

EROSION CONTROL:

1. CONSTRUCTION ACTIVITIES SHALL NOT COMMENCE UNTIL EROSION CONTROL DEVICES HAVE BEEN INSTALLED.
2. EROSION CONTROL DEVICES SHALL BE INSTALLED ACCORDING TO WDNR BEST MANAGEMENT PRACTICES AND THE CIVIL SPECIFICATIONS MANUAL.
3. EXISTING LANDSCAPING AND TREES TO REMAIN SHALL BE PRUNED TO REMOVE LOW HANGING, BROKEN, AND UNDESIRABLE GROWTH TO ENSURE HEALTHY AND SYMMETRICAL NEW GROWTH.
4. ALL AREAS DISTURBED BY CONTRACTOR OPERATIONS SHALL BE PREPARED FOR GRASS SEED BY LOOSENING RUTS AND WORKING THE SOIL AREAS TO A MINIMUM OF 6-INCHES PRIOR TO THE FINE GRADING AND SEEDING. AREAS SHALL HAVE A MINIMUM OF 4-INCHES OF TOPSOIL PLACED, SEEDED, AND MULCHED UNLESS OTHERWISE INDICATED.
5. INSPECTION OF ALL EROSION AND SEDIMENT CONTROL MEASURES SHALL BE DONE BY CONTRACTOR ONCE PER WEEK AND WITHIN 24 HOURS OF EVERY PRECIPITATION EVENT OF 1/2-INCH OR GREATER.
6. CONTRACTOR SHALL REPAIR DEFICIENT EROSION AND SEDIMENT CONTROL MEASURES WITHIN 24-HOURS AFTER INSPECTION. ADDITIONAL EROSION AND SEDIMENT CONTROL DEVICES NOT SHOWN ON THIS PLAN MAY BE NECESSARY AS A RESULT OF CONSTRUCTION PRACTICES OR AS DIRECTED BY OWNER AND/OR ENGINEER.
7. CONTRACTOR SHALL NOTIFY AND OBTAIN WRITTEN ACCEPTANCE FROM ENGINEER OF PROPOSED CHANGES TO THE EROSION CONTROL PLAN AND/OR SEQUENCE PRIOR TO IMPLEMENTING THE CHANGE.
8. EXCESS MATERIAL THAT IS HAULED OFF SITE SHALL BE CONTRACTOR'S RESPONSIBILITY. CONTRACTOR SHALL OBTAIN PROPER PERMIT APPROVALS FOR EACH FILL SITE. EROSION AND SEDIMENT CONTROL MEASURES, RESTORATION, AND STABILIZATION AT FILL SITE IS CONTRACTOR'S RESPONSIBILITY. CONTRACTOR TO NOTIFY OWNER OF ALL FILL AND BORROW SITES.
9. CONTRACTOR SHALL SWEEP STREETS ADJACENT TO PROJECT AS NEEDED.
10. ALL INSTALLATION, MAINTENANCE, AND REMOVAL OF EROSION AND SEDIMENT CONTROL MEASURES SHALL COMPLY WITH THE WDNR TECHNICAL STANDARDS.
11. IF DEWATERING IS NECESSARY, CONTRACTOR SHALL PROVIDE PROPER DEWATERING SEDIMENT CONTROL DEVICES. DISCHARGE OF SEDIMENT LADEN WATER TO THE STORM OR SURFACE WATER IS PROHIBITED.
12. STABILIZE NEWLY GRADED AREAS WITHIN 3 DAYS OF BEING INACTIVE.
13. REMOVE EROSION AND SEDIMENT CONTROL DEVICES AFTER 80% OF VEGETATION HAS BEEN ESTABLISHED IN RESTORED AREAS.

GRADING AND PAVING:

1. ALL SITE CONSTRUCTION INCLUDING GRADING, EXCAVATION, AND PAVEMENT CONSTRUCTION SHALL BE DONE IN ACCORDANCE WITH THE CORRESPONDING PROJECT CIVIL SPECIFICATIONS MANUAL AND SUPPLEMENTAL PLAN NOTES HEREIN.
2. CONTRACTOR SHALL STRIP AND REMOVE TOPSOIL AND ORGANIC MATERIALS FOUND WITH THE SITE IN ACCORDANCE WITH THE PROJECT CIVIL SPECIFICATIONS. LANDSCAPING AREAS SHALL BE GRADED LOW TO ALLOW FOR TOPSOIL PLACEMENT.
3. ALL MATERIAL TESTING SHALL CONFORM TO THE PROJECT CIVIL SPECIFICATIONS. RETESTING AND CORRECTION OF FAILING MATERIAL SHALL BE COMPLETED AT THE CONTRACTOR'S EXPENSE.
4. SUBGRADE SHALL BE COMPACTED PRIOR TO PLACEMENT OF BASE AGGREGATE AS REQUIRED IN THE STANDARD SPECIFICATIONS. SUBGRADE SHALL BE PROOF ROLLED PRIOR TO PLACEMENT OF BASE COURSE. AREAS IDENTIFIED AS SOFT AND YIELDING SHALL BE IDENTIFIED FOR REMOVAL PRIOR TO PLACEMENT OF BASE AGGREGATE.
5. BACKFILL AND FILL MATERIALS SHALL BE PLACED IN LAYERS NOT MORE THAN 8-INCHES LOOSE IF COMPACTED WITH HEAVY EQUIPMENT AND NOT MORE THAN 4-INCHES LOOSE IF COMPACTED BY HAND EQUIPMENT.
6. ACCESSIBLE ROUTES AND HANDICAP PARKING SHALL BE CONSTRUCTED IN ACCORDANCE WITH ADA STANDARDS.
7. ALL CONCRETE FLATWORK SHALL HAVE A LIGHT BROOMED FINISH.
8. EXTERIOR CONCRETE SHALL BE SEPARATED FROM BUILDINGS WITH A CONTINUOUS 0.5-INCH FIBER EXPANSION JOINT.
9. TWO PAINT COATS SHALL BE APPLIED ON NEW PAVEMENT. THE FIRST COAT SHALL BE AFTER PAVING OPERATIONS HAVE BEEN COMPLETED. THE SECOND COAT SHALL BE APPLIED 30 CALENDAR DAYS AFTER PAVING HAS BEEN COMPLETED.
10. ELEVATIONS ARE TO FLANGE.

LEGEND – CIVIL ENGINEERING DRAWINGS

CONTROL
- BENCHMARK
- CHIS — CHISELED MARK
- CP — CONTROL POINT
- IP — IRON PIPE (GENERIC)
- IP — IRON PIPE (1" DIA)
- IP — IRON PIPE (2" DIA)
- IP SET — IRON PIPE SET
- IR — IRON ROD (GENERIC)
- IP — IRON ROD (3/4" DIA)
- IP — IRON ROD (1 1/4" DIA)
- MONUMENT
- NAIL — NAIL
- PM — PAINT MARK
- PK — PK NAIL
- RX — RAILROAD SPIKE
- RTIE — REFERENCE TIE
- SECTION CORNER
- SIXT — SECTION CORNER MONUMENT
- TCP — TEMPORARY CONTROL POINT
- USGS — USGS MONUMENT

GROUND
- WZ 000.00 — WATER ELEVATION
- WETLANDS (SURVEYED LOCATION)
- CROPFIELD
- DITCH
- GUARD RAIL
- TOE OF SLOPE
- TOP OF BANK
- WETLAND BOUNDARY

EROSION CONTROL
- PROPOSED DITCH CHECK
- PROPOSED EROSION LOGS/EROSION WADDLES
- A — PROPOSED INLET PROTECTION TYPE A
- B — PROPOSED INLET PROTECTION TYPE B
- C — PROPOSED INLET PROTECTION TYPE C
- D — PROPOSED INLET PROTECTION TYPE D
- PROPOSED BARRIER FENCE
- PROPOSED SILT FENCE
- PROPOSED EROSION MAT
- PROPOSED RIP RAP
- PROPOSED TRACKING PAD

SANITARY SEWER
- SS — SANITARY MANHOLE
- SEPTIC — SEPTIC SYSTEM
- SEPC — SEPTIC TANK COVER
- SEPV — SEPTIC VENT
- ?" SAN SWR — SANITARY SEWER
- PROPOSED SANITARY MANHOLE
- PROPOSED SANITARY RISER
- PROPOSED SANITARY LATERAL
- PROPOSED SANITARY SEWER

STORM SEWER
- STORM CATCH BASIN
- STORM FIELD INLET
- STORM INLET
- STORM MANHOLE
- STORM YARD DRAIN
- ?" STO SWR — STORM SEWER
- CULVERT (SIZE & TYPE NOTED)
- PROPOSED STORM INL/CB
- PROPOSED STORM MANHOLE
- PROPOSED STORM LATERAL
- PROPOSED STORM SEWER

GENERAL
- A/C — AIR CONDITIONER
- CO — CLEAN OUT
- DP — DELINEATOR POST
- FP — FLAG POLE
- HAND HOLE — GENERIC HAND HOLE
- GENERIC MANHOLE
- GENERIC METER
- GENERIC PEDESTAL
- VLV — GENERIC VALVE
- VENT — GENERIC VENT
- GUY POLE — GUY POLE
- GUY — GUY WIRE
- LIGHT POLE
- MB — MAIL BOX
- MP — MARKER POST
- MWEL — MONITORING WELL
- PILE — PILING
- P — POST
- REVISION LABEL
- SOIL BORING
- UTILITY POLE
- YARD LIGHT

UTILITIES
- CB — CABLE BOX
- CM — CABLE MANHOLE
- C — UNDERGROUND TV CABLE
- E — ELECTRIC BOX
- E — ELECTRIC MANHOLE
- E — ELECTRIC METER
- EP — ELECTRIC PAD
- ELECTRIC TRANFORMER
- POWER POLE
- E — UNDERGROUND ELECTRIC
- E — PROPOSED UNDERGROUND ELECTRIC
- PROPOSED UNDERGROUND ELECTRIC
- GAS CURB STOP
- GM — GAS MANHOLE
- G — GAS METER
- GTST — GAS TEST STATION
- GAS VALVE
- GVT — GAS VALVE TEST
- GAS VENT — GAS VENT
- G — UNDERGROUND GAS MAIN
- G — PROPOSED UNDERGROUND GAS MAIN
- T — TELEPHONE BOX
- TM — TELEPHONE MANHOLE
- T — UNDERGROUND TELEPHONE
- FO — UNDERGROUND FIBER OPTIC
- FO — PROPOSED UNDERGROUND FIBER OPTIC

LANDSCAPE
- CONIFEROUS MULTIPLE TRUNK TREE
- CONIFEROUS TREE
- DECIDUOUS TREE
- DECIDUOUS MULTIPLE TRUNK TREE
- DECORATIVE ROCK
- STUMP
- EDGE OF PLANTER/LANDSCAPE BED
- EDGE OF TREES & BRUSH
- X — X — FENCE

RAILROAD
- RRSB — RAILROAD SIGNAL BOX
- RAILROAD SIGNAL FLASHER
- RX — RAILROAD SPIKE
- RAILROAD TRACKS

TRAFFIC SIGNAL
- CONTROL BOX/LIGHTING CABINET
- PULL BOX
- TRAFFIC SIGNAL
- LD — UNDERGROUND LOOP DETECTOR

WATER MAIN
- EXISTING HYDRANT
- EXISTING LOCATOR BOX
- EXISTING SPRINKLER HEAD
- EXISTING WATER CURB STOP
- EXISTING WATER MAIN BEND
- EXISTING WATER MAIN CROSS
- EXISTING WATER MAIN OFFSET
- EXISTING WATER MAIN PLUG
- EXISTING WATER MAIN PLUG W/ AIR RELEASE
- EXISTING WATER MAIN REDUCER
- EXISTING WATER VALVE
- WM — EXISTING WATER VALVE MANHOLE
- WELL — EXISTING WELL
- EXISTING YARD HYDRANT
- ?" WM — EXISTING WATER MAIN
- EXISTING WATER SERVICE
- PROPOSED CURB STOP
- PROPOSED HYDRANT
- PROPOSED LOCATOR BOX
- PROPOSED WATER MAIN BEND (ANGLE NOTED)
- PROPOSED WATER MAIN CROSS
- PROPOSED WATER MAIN OFFSET
- PROPOSED WATER MAIN PLUG
- PROPOSED WATER MAIN PLUG W/AIR RELEASE
- PROPOSED WATER MAIN REDUCER
- PROPOSED WATER MAIN TEE
- PROPOSED WATER VALVE
- PROPOSED WATER VALVE MANHOLE
- PROPOSED YARD HYDRANT
- PROPOSED WATER MAIN
- PROPOSED WATER SERVICE

PAVEMENT
- EXISTING SIGN
- EDGE OF ASPHALT PAVEMENT
- EDGE OF GRAVEL PAVEMENT
- EDGE OF CONCRETE PAVEMENT
- PROPOSED DETECTABLE WARNING FIELD
- PROPOSED SIGN
- PROPOSED EDGE OF ASPHALT PAVEMENT
- PROPOSED EDGE OF CONCRETE PAVEMENT
- PROPOSED EDGE OF GRAVEL PAVEMENT
- PROPOSED SLOPE INTERCEPT

Keller™
PLANNERS | ARCHITECTS | BUILDERS

FOX CITIES
N216 State Road 55
P.O. Box 620
Kaukauna, WI 54130
Phone (920)766–5795
1–800–236–2534
Fax (920)766–5004

MADISON
3308 Nursery Drive
Middleton, WI 53562
Phone (608)445–2245

MILWAUKEE
W204 N11509
Goldendale Rd
Germantown, WI 53022
Phone (262)250–9710
1–800–236–2534
Fax (262)250–9740

WAUSAU
5605 Lilac Ave
Wausau, WI 54401
Phone (715)849–3141
Fax (715)849–3181

www.kellerbuilds.com

PROPOSED FOR:
SOUTH CENTRAL LIBRARY
MADISON WISCONSIN

"COPYRIGHT NOTICE"
This design, drawing and detail is the copyrighted property of KELLER, INC. No part hereof shall be copied, duplicated, distributed, disclosed or made available to anyone without the expressed written consent of KELLER, INC.

REVISIONS

PROJECT MANAGER: D. FLANIGAN
DESIGNER: C. MEISEL
DRAWN BY: G. DEPREY
EXPEDITOR: S. LAMON
SUPERVISOR: D. CRAKER
PRELIMINARY NO: _____
CONTRACT NO: _____
DATE: 12/19/2022
SHEET: C2.0

Ruekert•Mielke
Waukesha • Kenosha • Madison
Global Water Center • Fox Valley
www.ruekertmielke.com

RUEKERT/MIELKE TAKES NO RESPONSIBILITY FOR ANY UNDERGROUND STRUCTURES OR BURIED MATERIALS SUCH AS, BUT NOT LIMITED TO, FOUNDATIONS, WELLS, SEPTIC, HOLDING TANKS, UTILITIES, HAZARDOUS MATERIALS, OR ANY OTHER ITEMS OF WHICH NO EVIDENCE CAN BE FOUND ON THE SURFACE BY A REASONABLE INSPECTION.

PURSUANT TO WISCONSIN STATUTE 182.0175, AVAILABLE DATA ON UNDERGROUND STRUCTURES, CONDUIT AND PIPES HAS BEEN SHOWN ON THIS MAP. THE LOCATIONS SHOWN HAVE BEEN COMPILED FROM A COMBINATION OF EXISTING UTILITY MAPS AND MARKINGS PLACED IN THE FIELD FOR THE VARIOUS FACILITIES BY "DIGGERS HOTLINE" (TICKET NO. 202114408347) SHALL NOT BE TAKEN AS CONCLUSIVE. FIELD VERIFICATION SHALL BE REQUIRED BEFORE ANY EXCAVATION.

DIGGERS HOTLINE
Toll Free (800) 242-8511
Milwaukee Area (414) 259-1181
Hearing Impaired TDD (800) 542-2289
www.DiggersHotline.com

GENERAL NOTES

"ISSUED NOT FOR CONSTRUCTION"

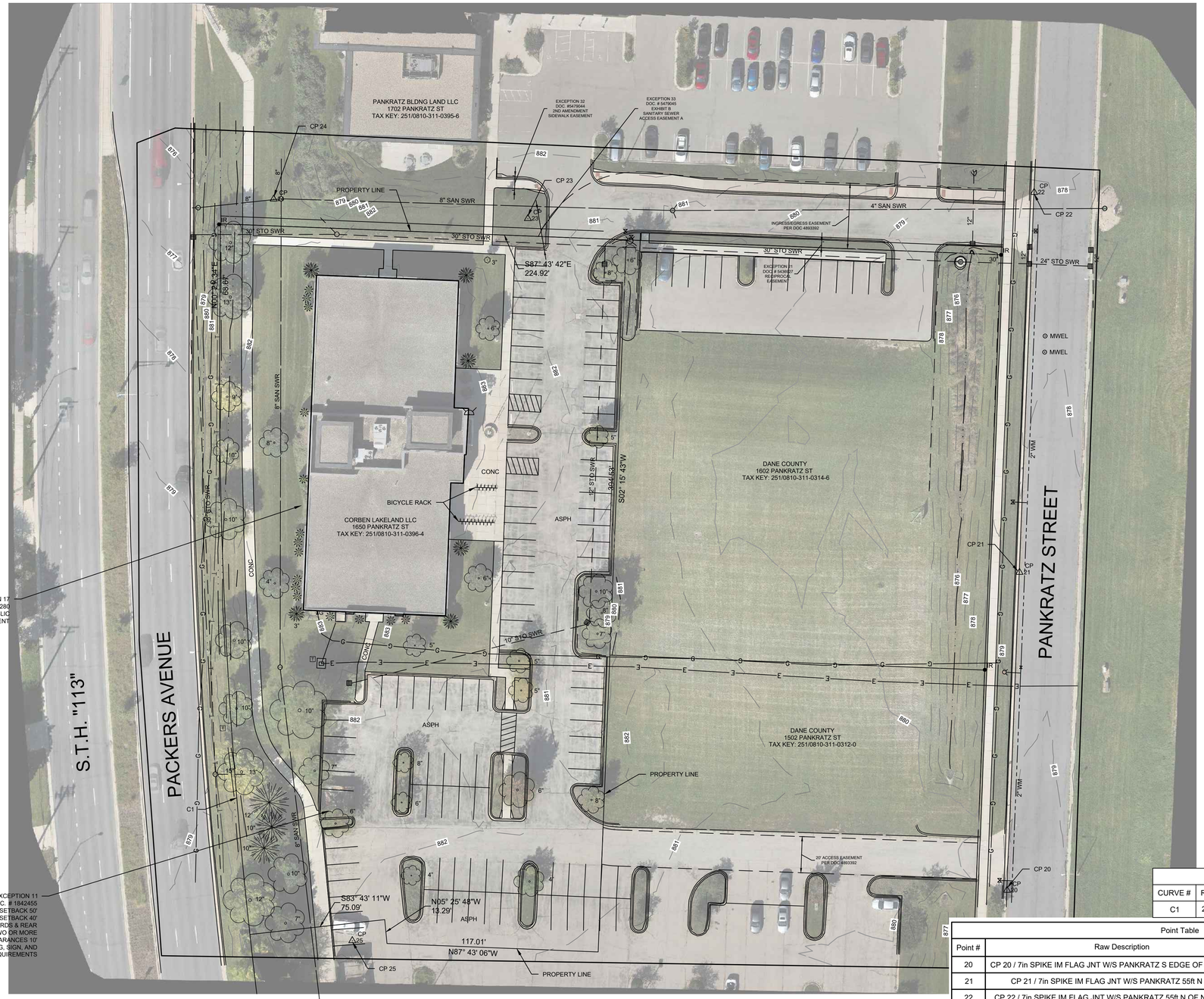

CURVE TABLE					
CURVE #	RADIUS	DELTA	CHORD	CHORD BRG.	ARC
C1	2,809.8'	06°38'08"	325.23'	N02° 157' 33"W	325.41'

Point Table				
Point #	Raw Description	Elevation	Northing	Easting
20	CP 20 / 7in SPIKE IM FLAG JNT W/S PANKRATZ S EDGE OF S ENTRANCE	879.135	498280.6340	829428.5270
21	CP 21 / 7in SPIKE IM FLAG JNT W/S PANKRATZ 55ft N OF HYD	878.367	498456.6610	829435.4200
22	CP 22 / 7in SPIKE IM FLAG JNT W/S PANKRATZ 55ft N OF N ENTRANCE	877.734	498667.0110	829443.5230
23	CP 23 / IR W/CAP CNT CURB BUMP OUT N/S LOT	882.320	498652.5340	829163.2210
24	CP 24 _ IR W/CAP NWCOR SITE 3ft W OF SANMH	881.595	498663.3300	829022.4680
25	CP 25 _ 7in SPIKE IN CRACK N OF FNC FOR GARBAGE	881.884	498252.7330	829066.0260

0 10 20 30 60
SCALE IN FEET

Keller
PLANNERS | ARCHITECTS | BUILDERS

FOX CITIES
N216 State Road 55
P.O. Box 620
Kaukauna, WI 54130
Phone (920)766-5795
1-800-236-2534
Fax (920)766-5004

MADISON
3308 Nursery Drive
Middleton, WI 53562
Phone (608)445-2245

MILWAUKEE
W204 N11509
Goldendale Rd
Germantown, WI 53022
Phone (262)250-9710
1-800-236-2534
Fax (262)250-9740

WAUSAU
5605 Lilac Ave
Wausau, WI 54401
Phone (715)849-3141
Fax (715)849-3181

www.kellerbuilds.com

PROPOSED FOR:
SOUTH CENTRAL LIBRARY
MADISON WISCONSIN

"COPYRIGHT NOTICE"
This design, drawing and detail is the copyrighted property of KELLER, INC. No part hereof shall be copied, duplicated, distributed, disclosed or made available to anyone without the expressed written consent of KELLER, INC.

REVISIONS

PROJECT MANAGER: D. FLANIGAN
DESIGNER: C. MEISEL
DRAWN BY: G. DEPREY
EXPEDITOR: S. LAMON
SUPERVISOR: D. CRAKER
PRELIMINARY NO: _____
CONTRACT NO: _____
DATE: 12/19/2022
SHEET: C3.0

Ruekert • Mielke
Waukesha • Kenosha • Madison
Global Water Center • Fox Valley
www.ruekertmielke.com

RUEKERT/MIELKE TAKES NO RESPONSIBILITY FOR ANY UNDERGROUND STRUCTURES OR BURIED MATERIALS SUCH AS, BUT NOT LIMITED TO, FOUNDATIONS, WELLS, SEPTIC, HOLDING TANKS, UTILITIES, HAZARDOUS MATERIALS, OR ANY OTHER ITEMS OF WHICH NO EVIDENCE CAN BE FOUND ON THE SURFACE BY A REASONABLE INSPECTION.

PURSUANT TO WISCONSIN STATUTE 182.0175, AVAILABLE DATA ON UNDERGROUND STRUCTURES, CONDUIT AND PIPES HAS BEEN SHOWN ON THIS MAP. THE LOCATIONS SHOWN HAVE BEEN COMPILED FROM A COMBINATION OF EXISTING UTILITY MAPS AND MARKINGS PLACED IN THE FIELD FOR THE VARIOUS FACILITIES BY "DIGGERS HOTLINE" (TICKET NO. 202114408347) SHALL NOT BE TAKEN AS CONCLUSIVE. FIELD VERIFICATION SHALL BE REQUIRED BEFORE ANY EXCAVATION.

EXISTING CONDITIONS

"ISSUED NOT FOR CONSTRUCTION"

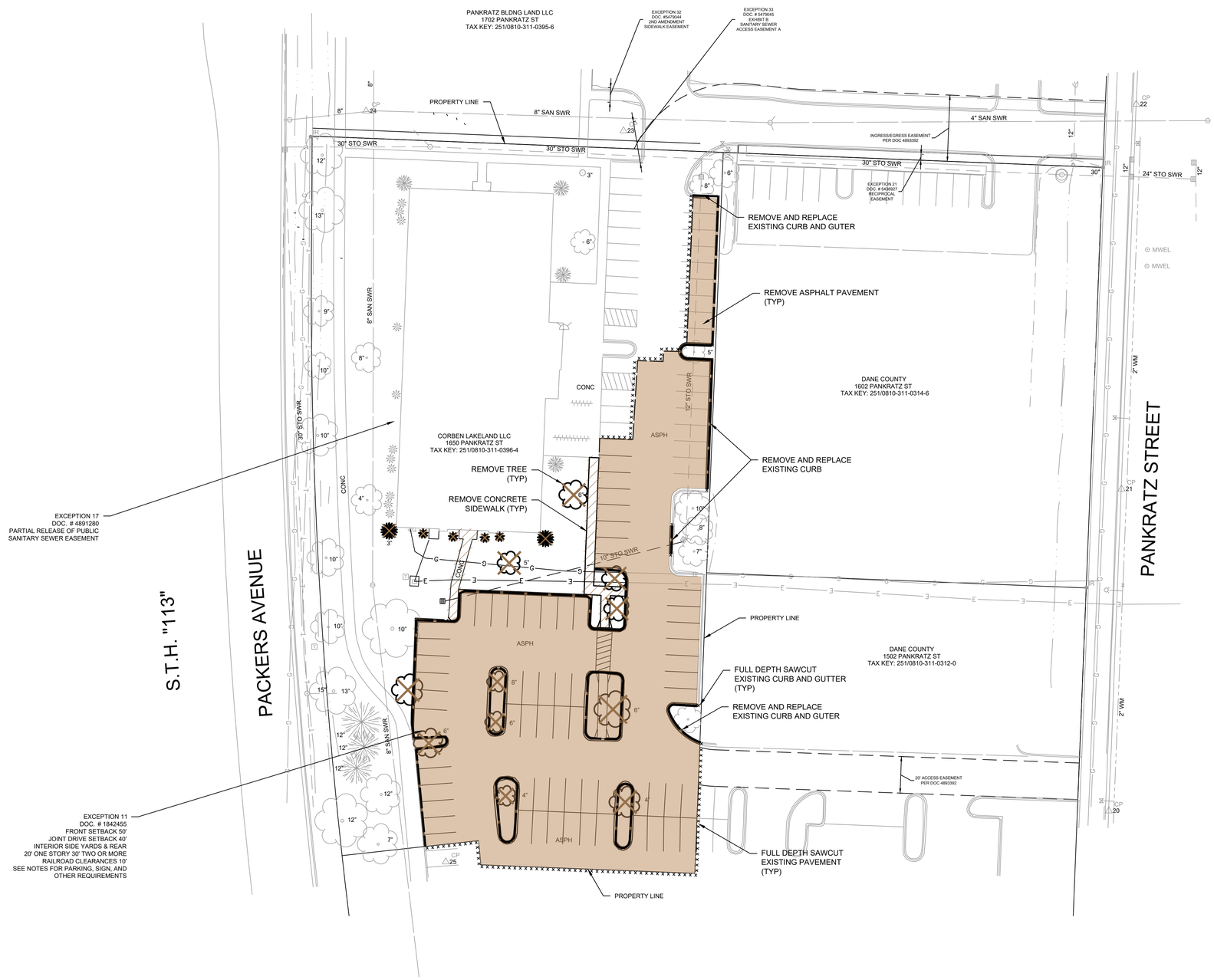

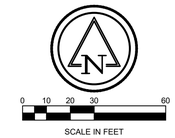

Keller
PLANNERS | ARCHITECTS | BUILDERS

FOX CITIES
N216 State Road 55
P.O. Box 620
Kaukauna, WI 54130
Phone (920)766-5795
1-800-236-2534
Fax (920)766-5004

MADISON
3308 Nursery Drive
Middleton, WI 53562
Phone (608)445-2245

MILWAUKEE
W204 N11509
Goldendale Rd
Germantown, WI 53022
Phone (262)250-9710
1-800-236-2534
Fax (262)250-9740

WAUSAU
5605 Lilac Ave
Wausau, WI 54401
Phone (715)849-3141
Fax (715)849-3181

www.kellerbuilds.com

PROPOSED FOR:
SOUTH CENTRAL LIBRARY
MADISON WISCONSIN

"COPYRIGHT NOTICE"
This design, drawing and detail is the copyrighted property of KELLER, INC. No part hereof shall be copied, duplicated, distributed, disclosed or made available to anyone without the expressed written consent of KELLER, INC.

REVISIONS

PROJECT MANAGER: D. FLANIGAN
DESIGNER: C. MEISEL
DRAWN BY: G. DEPREY
EXPEDITOR: S. LAMON
SUPERVISOR: D. CRAKER
PRELIMINARY NO: ------
CONTRACT NO: ------
DATE: 12/19/2022
SHEET: C4.0

Ruekert • Mielke
Waukesha • Kenosha • Madison
Global Water Center • Fox Valley
www.ruekertmielke.com

RUEKERT/MIELKE TAKES NO RESPONSIBILITY FOR ANY UNDERGROUND STRUCTURES OR BURIED MATERIALS SUCH AS, BUT NOT LIMITED TO, FOUNDATIONS, WELLS, SEPTIC, HOLDING TANKS, UTILITIES, HAZARDOUS MATERIALS, OR ANY OTHER ITEMS OF WHICH NO EVIDENCE CAN BE FOUND ON THE SURFACE BY A REASONABLE INSPECTION.

PURSUANT TO WISCONSIN STATUTE 182.0175, AVAILABLE DATA ON UNDERGROUND STRUCTURES, CONDUIT AND PIPES HAS BEEN SHOWN ON THIS MAP. THE LOCATIONS SHOWN HAVE BEEN COMPILED FROM A COMBINATION OF EXISTING UTILITY MAPS AND MARKINGS PLACED IN THE FIELD FOR THE VARIOUS FACILITIES BY "DIGGERS HOTLINE" (TICKET NO. 202114408347) SHALL NOT BE TAKEN AS CONCLUSIVE. FIELD VERIFICATION SHALL BE REQUIRED BEFORE ANY EXCAVATION.

DEMOLITION PLAN

"ISSUED NOT FOR CONSTRUCTION"

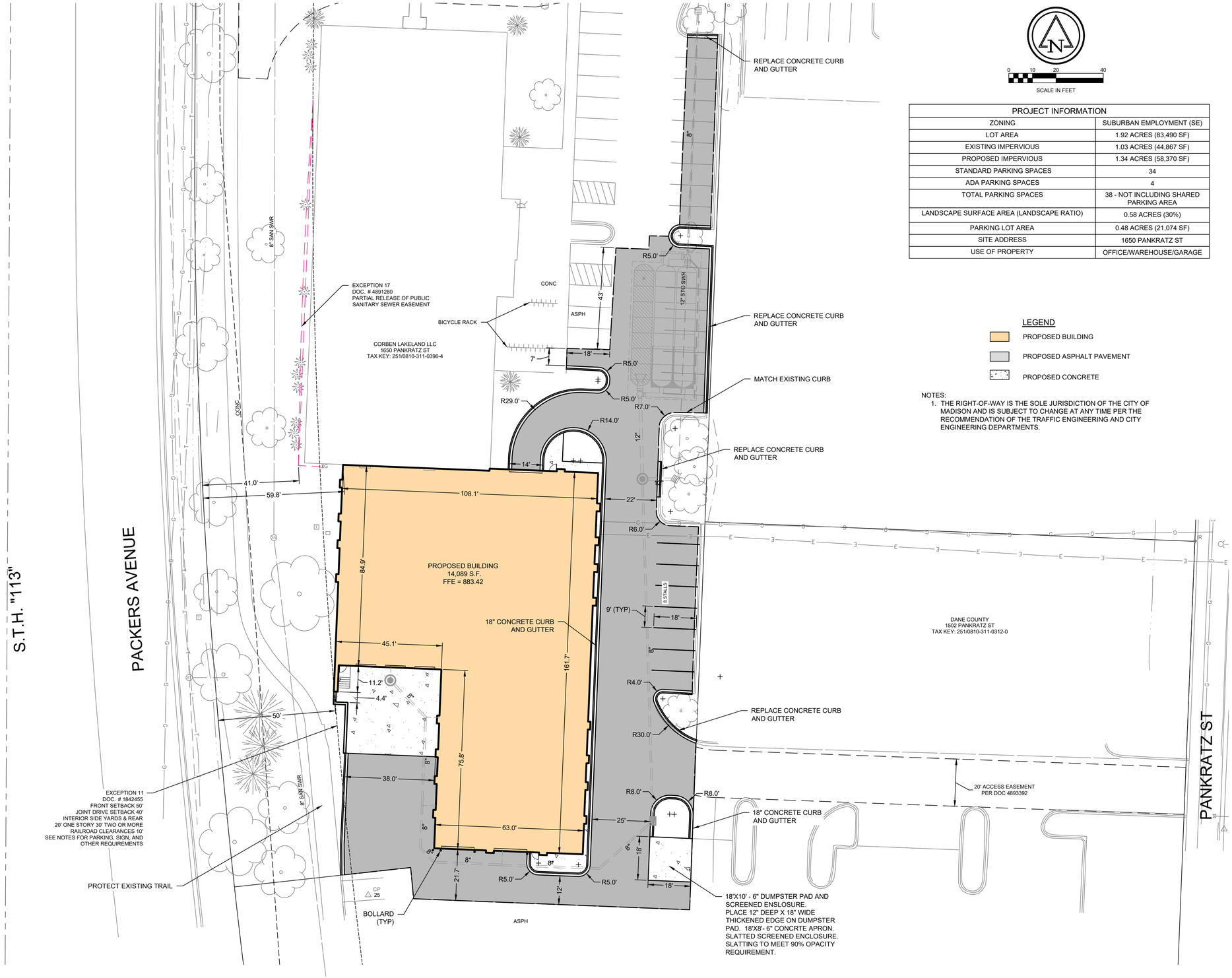

0 10 20 40
SCALE IN FEET

PROJECT INFORMATION	
ZONING	SUBURBAN EMPLOYMENT (SE)
LOT AREA	1.92 ACRES (83,490 SF)
EXISTING IMPERVIOUS	1.03 ACRES (44,867 SF)
PROPOSED IMPERVIOUS	1.34 ACRES (58,370 SF)
STANDARD PARKING SPACES	34
ADA PARKING SPACES	4
TOTAL PARKING SPACES	38 - NOT INCLUDING SHARED PARKING AREA
LANDSCAPE SURFACE AREA (LANDSCAPE RATIO)	0.58 ACRES (30%)
PARKING LOT AREA	0.48 ACRES (21,074 SF)
SITE ADDRESS	1650 PANKRATZ ST
USE OF PROPERTY	OFFICE/WAREHOUSE/GARAGE

LEGEND

- PROPOSED BUILDING
- PROPOSED ASPHALT PAVEMENT
- PROPOSED CONCRETE

NOTES:

1. THE RIGHT-OF-WAY IS THE SOLE JURISDICTION OF THE CITY OF MADISON AND IS SUBJECT TO CHANGE AT ANY TIME PER THE RECOMMENDATION OF THE TRAFFIC ENGINEERING AND CITY ENGINEERING DEPARTMENTS.

Keller
PLANNERS | ARCHITECTS | BUILDERS

FOX CITIES
N216 State Road 55
P.O. Box 620
Kaukauna, WI 54130
Phone (920)766-5795
1-800-236-2534
Fax (920)766-5004

MADISON
3308 Nursery Drive
Middleton, WI 53562
Phone (608)445-2245

MILWAUKEE
W204 N11509
Goldendale Rd
Germantown, WI 53022
Phone (262)250-9710
1-800-236-2534
Fax (262)250-9740

WAUSAU
5605 Lilac Ave
Wausau, WI 54401
Phone (715)849-3141
Fax (715)849-3181

www.kellerbuilds.com

PROPOSED FOR:
SOUTH CENTRAL LIBRARY
MADISON WISCONSIN

"COPYRIGHT NOTICE"
This design, drawing and detail is the copyrighted property of KELLER, INC. No part hereof shall be copied, duplicated, distributed, disclosed or made available to anyone without the expressed written consent of KELLER, INC.

REVISIONS

PROJECT MANAGER: D. FLANIGAN
DESIGNER: C. MEISEL
DRAWN BY: G. DEPREY
EXPEDITOR: S. LAMON
SUPERVISOR: D. CRAKER
PRELIMINARY NO: ------
CONTRACT NO: ------
DATE: 12/19/2022
SHEET: C5.0

Ruekert • Mielke
Waukesha • Kenosha • Madison
Global Water Center • Fox Valley
www.ruekertmielke.com

RUEKERT/MIELKE TAKES NO RESPONSIBILITY FOR ANY UNDERGROUND STRUCTURES OR BURIED MATERIALS SUCH AS, BUT NOT LIMITED TO, FOUNDATIONS, WELLS, SEPTIC, HOLDING TANKS, UTILITIES, HAZARDOUS MATERIALS, OR ANY OTHER ITEMS OF WHICH NO EVIDENCE CAN BE FOUND ON THE SURFACE BY A REASONABLE INSPECTION.

PURSUANT TO WISCONSIN STATUTE 182.0175, AVAILABLE DATA ON UNDERGROUND STRUCTURES, CONDUIT AND PIPES HAS BEEN SHOWN ON THIS MAP. THE LOCATIONS SHOWN HAVE BEEN COMPILED FROM A COMBINATION OF EXISTING UTILITY MAPS AND MARKINGS PLACED IN THE FIELD FOR THE VARIOUS FACILITIES BY "DIGGERS HOTLINE" (TICKET NO. 202114408347) SHALL NOT BE TAKEN AS CONCLUSIVE. FIELD VERIFICATION SHALL BE REQUIRED BEFORE ANY EXCAVATION.

SITE PLAN

"ISSUED NOT FOR CONSTRUCTION"

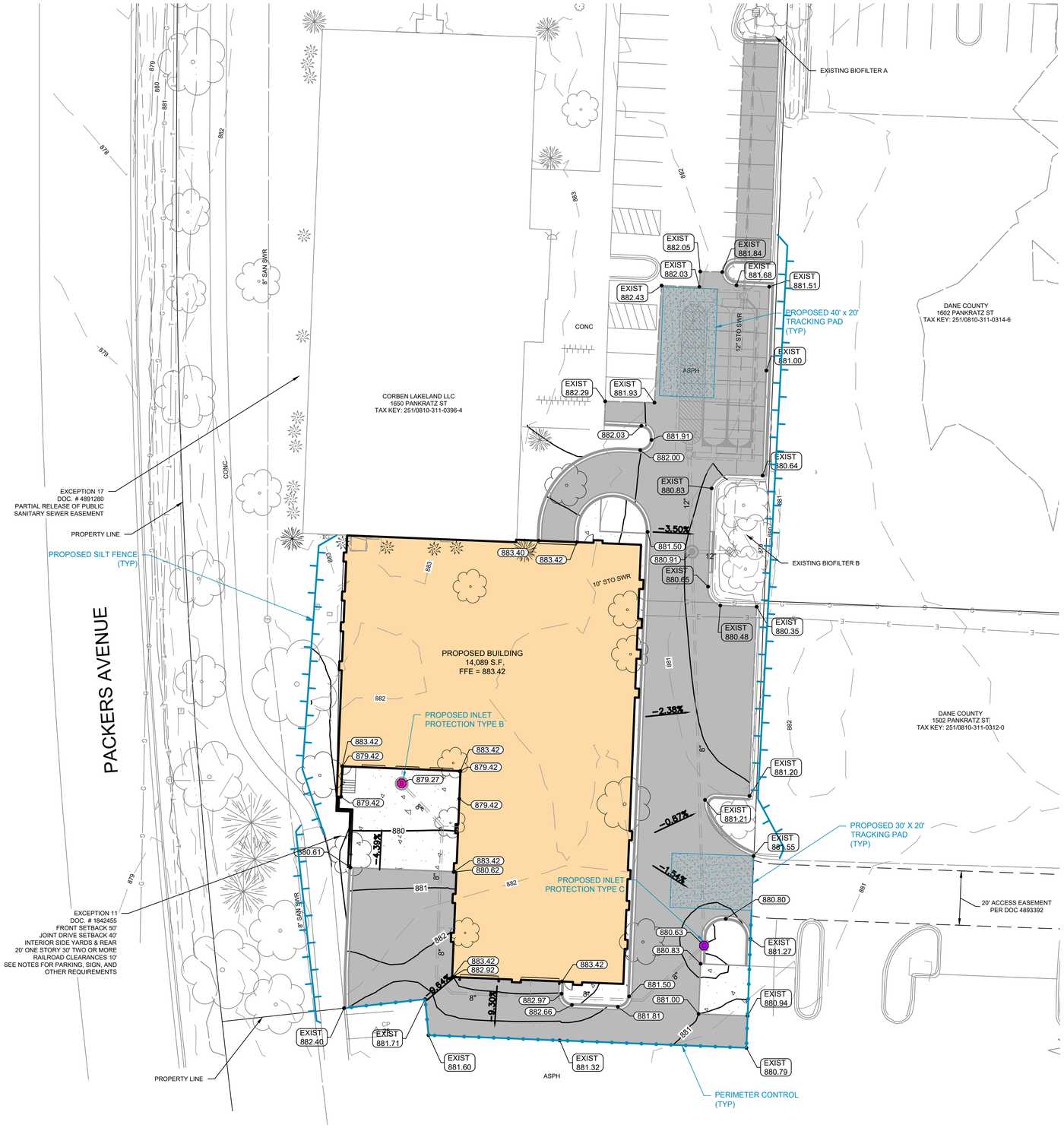

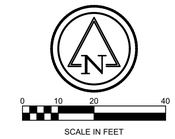

CONSTRUCTION SEQUENCE

1. INSTALL TRACKING PAD WHERE SHOWN IN ACCORDANCE WITH WDNR TECHNICAL STANDARD NO. 1057. MAINTAIN AND REINSTALL AS GRADING ACTIVITIES AND USAGE REQUIRE.
2. INSTALL SILT FENCE WHERE SHOWN IN ACCORDANCE WITH WDNR TECHNICAL STANDARD NO. 1056. CLEAR AND GRUB AS NECESSARY FOR INSTALLATION OF THESE MEASURES.
3. COMPLETE CLEARING AND GRUBBING.
4. STRIP AND STOCKPILE TOPSOIL NECESSARY TO COMPLETE EACH COMPONENT OF THE PROJECT PLANS. STRIPPED TOPSOIL SHALL BE STOCKPILED AND SECURED WITH SILT FENCE AROUND THE PERIMETER AND STABILIZED WITH TEMPORARY SEEDING.
5. CONSTRUCT STORM SEWER. INSTALL INLET PROTECTION ON ALL NEW STORM SEWER INLETS. GRADE AND IMMEDIATELY STABILIZE STORM SEWER OUTFALLS.
6. GRADE PARKING LOT TO SUBGRADE. INSTALL TEMPORARY SEED AND STABILIZE ALL NON-PAVED AREAS DISTURBED DURING PARKING LOT GRADING.
7. CONSTRUCT CURB AND GUTTER, SIDEWALK, AND INSTALL BINDER AND SURFACE COURSE PAVEMENT FOR PARKING LOT.
8. COMPLETE ALL REMAINING PERIMETER RESTORATION AND STABILIZATION.
9. ONCE SITE IS 70% VEGETATED REMOVE ALL TEMPORARY EROSION CONTROL MEASURES. RESTORE DISTURBED AREAS.
10. CLEAN OUT STORM SEWER AND INLETS. CLEAN SITE.
11. CONTRACTOR TO COMPLETE SITE EROSION CONTROL INSPECTIONS WEEKLY AND WITHIN 24 HOURS AFTER ANY 0.5" RAIN EVENT AND SUBMIT THROUGH CITY OF MADISON ONLINE PERMITTING SYSTEM PER CHAPTER 37 OF THE CITY OF MADISON CODE OF ORDINANCES.

NOTES:
1. THE RIGHT-OF-WAY IS THE SOLE JURISDICTION OF THE CITY OF MADISON AND IS SUBJECT TO CHANGE AT ANY TIME PER THE RECOMMENDATION OF THE TRAFFIC ENGINEERING AND CITY ENGINEERING DEPARTMENTS.
2. NO CATCH BASINS ARE LOCATED SOUTH OR EAST OF THE PROJECT IN THE PARKING LOT. NO OFFSITE INLET PROTECTION IS REQUIRED

Keller
PLANNERS | ARCHITECTS | BUILDERS

FOX CITIES
N216 State Road 55
P.O. Box 620
Kaukauna, WI 54130
Phone (920)766-5795
1-800-236-2534
Fax (920)766-5004

MADISON
3308 Nursery Drive
Middleton, WI 53562
Phone (608)445-2245

MILWAUKEE
W204 N11509
Goldendale Rd
Germantown, WI 53022
Phone (262)250-9710
1-800-236-2534
Fax (262)250-9740

WAUSAU
5605 Lilac Ave
Wausau, WI 54401
Phone (715)849-3141
Fax (715)849-3181

www.kellerbuilds.com

PROPOSED FOR:
SOUTH CENTRAL LIBRARY
MADISON WISCONSIN

"COPYRIGHT NOTICE"
This design, drawing and detail is the copyrighted property of KELLER, INC. No part hereof shall be copied, duplicated, distributed, disclosed or made available to anyone without the expressed written consent of KELLER, INC.

REVISIONS

PROJECT MANAGER: D. FLANIGAN
DESIGNER: C. MEISEL
DRAWN BY: G. DEPREY
EXPEDITOR: S. LAMON
SUPERVISOR: D. CRAKER
PRELIMINARY NO: -------
CONTRACT NO: -------
DATE: 12/19/2022
SHEET: C6.0

Ruekert•Mielke
Waukesha • Kenosha • Madison
Global Water Center • Fox Valley
www.ruekertmielke.com

RUEKERT/MIELKE TAKES NO RESPONSIBILITY FOR ANY UNDERGROUND STRUCTURES OR BURIED MATERIALS SUCH AS, BUT NOT LIMITED TO, FOUNDATIONS, WELLS, SEPTIC, HOLDING TANKS, UTILITIES, HAZARDOUS MATERIALS, OR ANY OTHER ITEMS OF WHICH NO EVIDENCE CAN BE FOUND ON THE SURFACE BY A REASONABLE INSPECTION.

PURSUANT TO WISCONSIN STATUTE 182.0175, AVAILABLE DATA ON UNDERGROUND STRUCTURES, CONDUIT AND PIPES HAS BEEN SHOWN ON THIS MAP. THE LOCATIONS SHOWN HAVE BEEN COMPILED FROM A COMBINATION OF EXISTING UTILITY MAPS AND MARKINGS PLACED IN THE FIELD FOR THE VARIOUS FACILITIES BY "DIGGERS HOTLINE" (TICKET NO. 202114408347) SHALL NOT BE TAKEN AS CONCLUSIVE. FIELD VERIFICATION SHALL BE REQUIRED BEFORE ANY EXCAVATION.

GRADING & EROSION CONTROL PLAN

"ISSUED NOT FOR CONSTRUCTION"

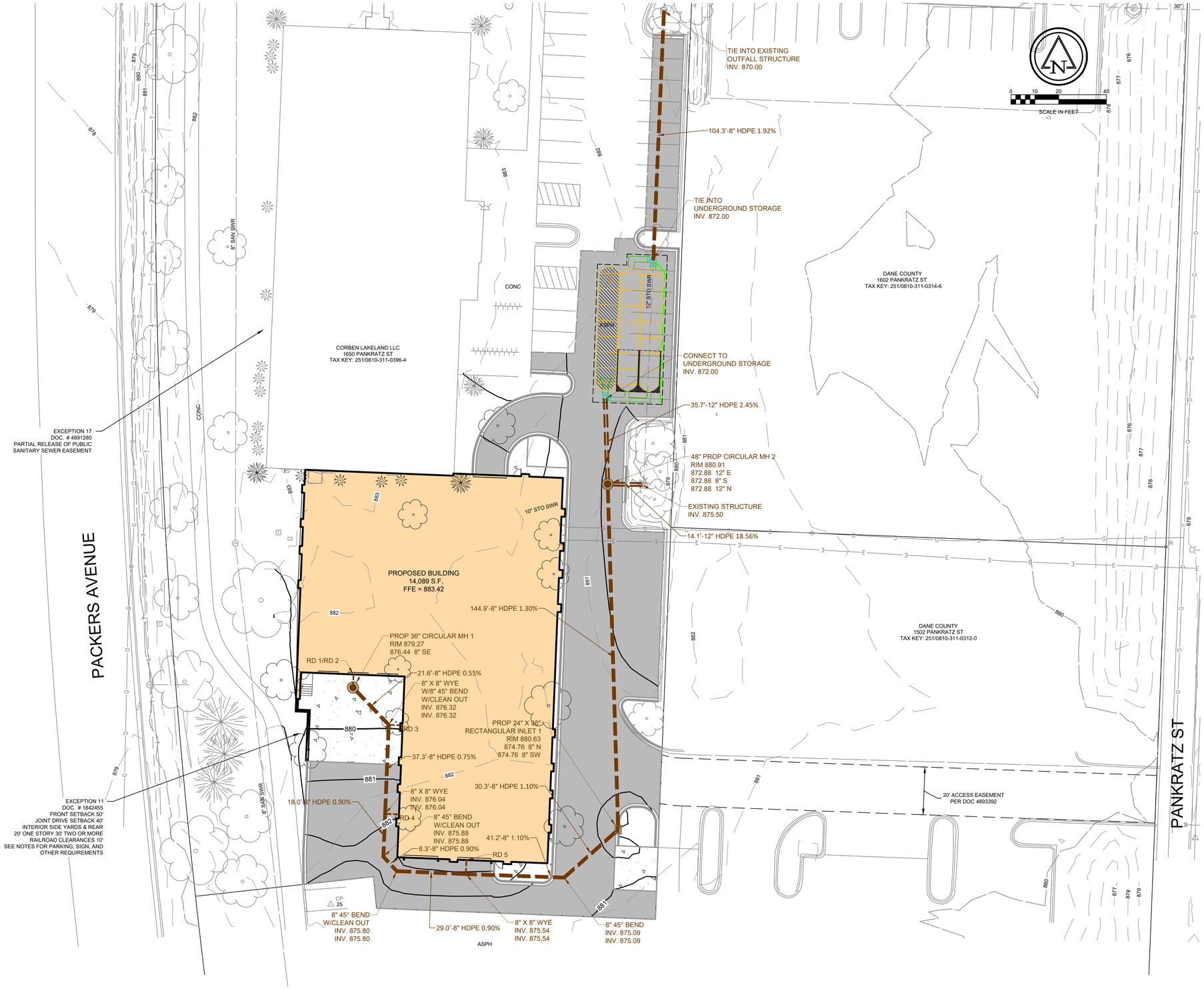

Ruekert • Mielke
Waukesha • Kenosha • Madison
Global Water Center • Fox Valley
www.ruekertmielke.com

RUEKERT/MIELKE TAKES NO RESPONSIBILITY FOR ANY UNDERGROUND STRUCTURES OR BURIED MATERIALS SUCH AS, BUT NOT LIMITED TO, FOUNDATIONS, WELLS, SEPTIC, HOLDING TANKS, UTILITIES, HAZARDOUS MATERIALS, OR ANY OTHER ITEMS OF WHICH NO EVIDENCE CAN BE FOUND ON THE SURFACE BY A REASONABLE INSPECTION.

PURSUANT TO WISCONSIN STATUTE 182.0175, AVAILABLE DATA ON UNDERGROUND STRUCTURES, CONDUIT AND PIPES HAS BEEN SHOWN ON THIS MAP. THE LOCATIONS SHOWN HAVE BEEN COMPILED FROM A COMBINATION OF EXISTING UTILITY MAPS AND MARKINGS PLACED IN THE FIELD FOR THE VARIOUS FACILITIES BY "DIGGERS HOTLINE" (TICKET NO. 202114408347) SHALL NOT BE TAKEN AS CONCLUSIVE. FIELD VERIFICATION SHALL BE REQUIRED BEFORE ANY EXCAVATION.

UTILITY PLAN

"ISSUED NOT FOR CONSTRUCTION"

Keller
PLANNERS | ARCHITECTS | BUILDERS

FOX CITIES
N216 State Road 55
P.O. Box 620
Kaukauna, WI 54130
Phone (920)766-5795
1-800-236-2534
Fax (920)766-5004

MADISON
3308 Nursery Drive
Middleton, WI 53562
Phone (608)445-2245

MILWAUKEE
W204 N11509
Goldendale Rd
Germantown, WI 53022
Phone (262)250-9710
1-800-236-2534
Fax (262)250-9740

WAUSAU
5605 Lilac Ave
Wausau, WI 54401
Phone (715)849-3141
Fax (715)849-3181

www.kellerbuilds.com

PROPOSED FOR:
SOUTH CENTRAL LIBRARY
MADISON WISCONSIN

"COPYRIGHT NOTICE"
This design, drawing and detail is the copyrighted property of KELLER, INC. No part hereof shall be copied, duplicated, distributed, disclosed or made available to anyone without the expressed written consent of KELLER, INC.

REVISIONS

PROJECT MANAGER: D. FLANIGAN
DESIGNER: C. MEISEL
DRAWN BY: G. DEPREY
EXPEDITOR: S. LAMON
SUPERVISOR: D. CRAKER
PRELIMINARY NO: ------
CONTRACT NO: ------
DATE: 12/19/2022
SHEET: C7.0

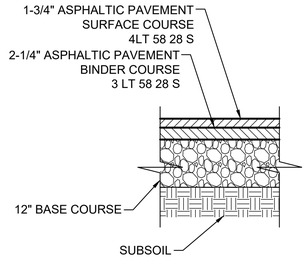

PARKING LOT PAVEMENT CROSS SECTION

NO SCALE

PV-SECT-07 12

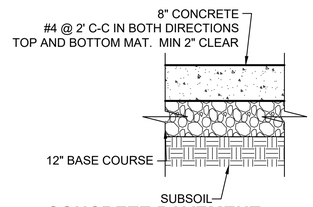

CONCRETE PAVEMENT CROSS SECTION

NO SCALE

PV-SECT-07A 12

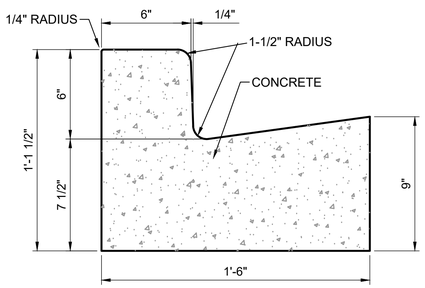

VERTICAL FACE CURB & GUTTER

NO SCALE

PV-CURB-15 1

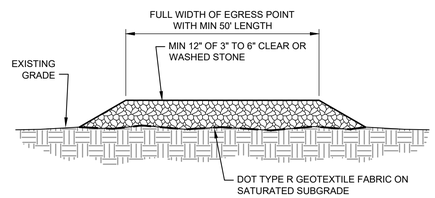

PAD MAY BE POSITIONED AS PERMANENT DRIVEWAY SUBBASE IF PLACED ON MINERAL SOIL AND IT MEETS BEARING & COMPACTION REQUIREMENTS BEFORE BASE PLACEMENT AND ELEVATIONS MATCH PROPOSED GRADING PLAN.

TRACKING PAD

NO SCALE

01570PAD 1

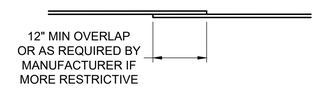

TYPICAL PERIMETER CONTROL PLAN

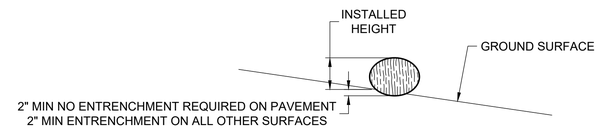

NOTE:
INSTALLED HEIGHT IS MEASURED FROM THE UPSLOPE GROUND SURFACE TO THE TOP OF THE PRODUCT. DUE TO SETTLEMENT AND/ OR DEFORMATION, THE INSTALLED HEIGHT MAY NOT BE EQUIVALENT TO THE NOMINAL DIAMETER OF THE PRODUCT.

TYPICAL PERIMETER CONTROL CROSS SECTION

PERIMETER CONTROL DETAIL (EROSION LOGS)

NO SCALE

EC-DITCH-07a 16

SDD 8e9 Silt Fence

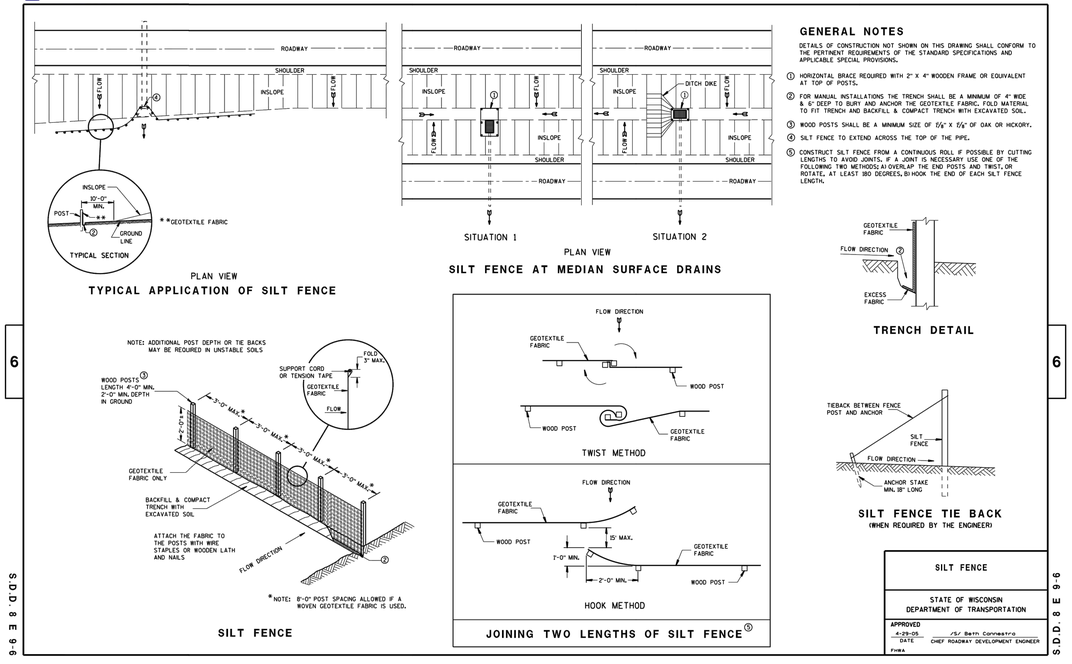

GENERAL NOTES

DETAILS OF CONSTRUCTION NOT SHOWN ON THS DRAWING SHALL CONFORM TO THE PERTINENT REQUIREMENTS OF THE STANDARD SPECIFICATIONS AND APPLICABLE SPECIAL PROVISIONS.

1. HORIZONTAL BRACE REQUIRED WITH 2" X 4" WOODEN FRAME OR EQUIVALENT AT TOP OF POSTS.
2. FOR MANUAL INSTALLATIONS THE TRENCH SHALL BE A MINIMUM OF 4" WIDE & 6" DEEP TO BURY AND ANCHOR THE GEOTEXTILE FABRIC. FOLD MATERIAL TO FIT TRENCH AND BACKFILL & COMPACT TRENCH WITH EXCAVATED SOIL.
3. WOOD POSTS SHALL BE A MINIMUM SIZE OF 1½" X 1½" OF OAK OR HICKORY.
4. SILT FENCE TO EXTEND ACROSS THE TOP OF THE PIPE.
5. CONSTRUCT SILT FENCE FROM A CONTINUOUS ROLL IF POSSIBLE BY CUTTING LENGTHS TO AVOID JOINTS. IF A JOINT IS NECESSARY USE ONE OF THE FOLLOWING TWO METHODS: A) OVERLAP THE END POSTS AND TWIST, OR ROTATE, AT LEAST 180 DEGREES. B) HOOK THE END OF EACH SILT FENCE LENGTH.

SILT FENCE	
STATE OF WISCONSIN DEPARTMENT OF TRANSPORTATION	
APPROVED 4-29-05 DATE	/S/ Beth Cormastro CHIEF ROADWAY DEVELOPMENT ENGINEER
FHWA	

SDD. 8 E 9-6

SDD 8e10 Inlet Protection Type A, B, C and D

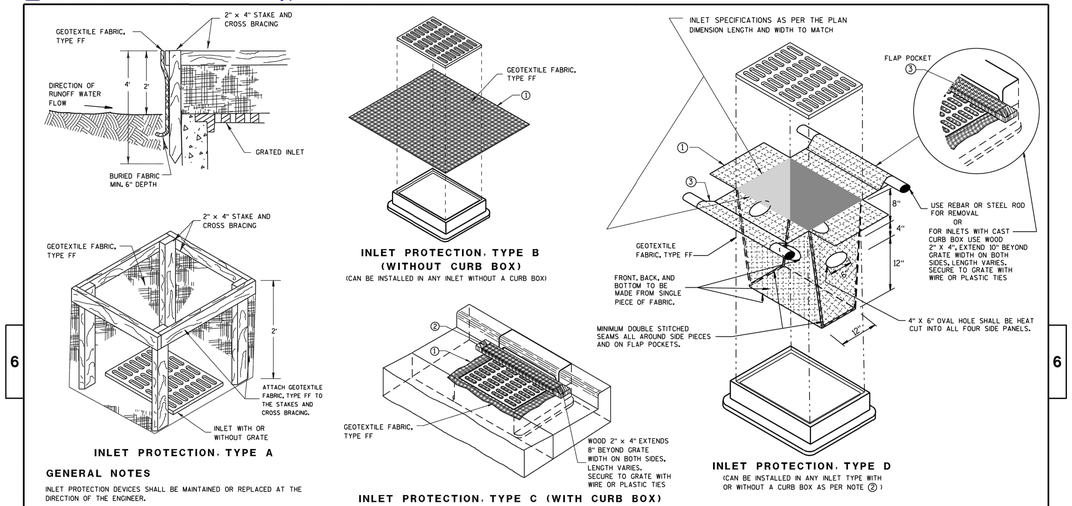

GENERAL NOTES

INLET PROTECTION DEVICES SHALL BE MAINTAINED OR REPLACED AT THE DIRECTION OF THE ENGINEER.

MANUFACTURED ALTERNATIVES APPROVED AND LISTED ON THE DEPARTMENT'S EROSION CONTROL PRODUCT ACCEPTABILITY LIST MAY BE SUBSTITUTED.

WHEN REMOVING OR MAINTAINING INLET PROTECTION, CARE SHALL BE TAKEN SO THAT THE SEDIMENT TRAPPED ON THE GEOTEXTILE FABRIC DOES NOT FALL INTO THE INLET. ANY MATERIAL FALLING INTO THE INLET SHALL BE REMOVED IMMEDIATELY.

1. FINISHED SIZE, INCLUDING FLAP POCKETS WHERE REQUIRED, SHALL EXTEND A MINIMUM OF 10" AROUND THE PERIMETER TO FACILITATE MAINTENANCE OR REMOVAL.
2. FOR INLET PROTECTION, TYPE C (WITH CURB BOX), AN ADDITIONAL 18" OF FABRIC IS WRAPPED AROUND THE WOOD AND SECURED WITH STAPLES. THE WOOD SHALL NOT BLOCK THE ENTIRE HEIGHT OF THE CURB BOX OPENING.
3. FLAP POCKETS SHALL BE LARGE ENOUGH TO ACCEPT WOOD 2X4.

INSTALLATION NOTES

TYPE B & C

TRIM EXCESS FABRIC IN THE FLOW LINE TO WITHIN 3" OF THE GRATE.

THE CONTRACTOR SHALL DEMONSTRATE A METHOD OF MAINTENANCE, USING A SEWN FLAP, HAND HOLDS OR OTHER METHOD TO PREVENT ACCUMULATED SEDIMENT FROM ENTERING THE INLET.

TYPE D

DO NOT INSTALL INLET PROTECTION TYPE D IN INLETS SHALLOWER THAN 30", MEASURED FROM THE BOTTOM OF THE INLET TO THE TOP OF THE GRATE.

TRIM EXCESS FABRIC IN THE FLOW LINE TO WITHIN 3" OF THE GRATE.

THE INSTALLED BAG SHALL HAVE A MINIMUM SIDE CLEARANCE, BETWEEN THE INLET WALLS AND THE BAG, MEASURED AT THE BOTTOM OF THE OVERFLOW HOLES, OF 3". WHERE NECESSARY THE CONTRACTOR SHALL CINCH THE BAG, USING PLASTIC ZIP TIES, TO ACHIEVE THE 3" CLEARANCE. THE TIES SHALL BE PLACED AT A MAXIMUM OF 4" FROM THE BOTTOM OF THE BAG.

INLET PROTECTION TYPE A, B, C, AND D	
STATE OF WISCONSIN DEPARTMENT OF TRANSPORTATION	
APPROVED 12-16-02 DATE	/S/ Beth Cormastro CHIEF ROADWAY DEVELOPMENT ENGINEER
FHWA	

SDD. 8 E 10-2

Keller
PLANNERS | ARCHITECTS | BUILDERS

FOX CITIES
N216 State Road 55
P.O. Box 620
Kaukauna, WI 54130
Phone (920)766-5795
1-800-236-2534
Fax (920)766-5004

MADISON
3308 Nursery Drive
Middleton, WI 53562
Phone (608)445-2245

MILWAUKEE
W204 N11509
Goldendale Rd
Germantown, WI 53022
Phone (262)250-9710
1-800-236-2534
Fax (262)250-9740

WAUSAU
5605 Lilac Ave
Wausau, WI 54401
Phone (715)849-3141
Fax (715)849-3181

www.kellerbuilds.com

PROPOSED FOR:
SOUTH CENTRAL LIBRARY
MADISON WISCONSIN

"COPYRIGHT NOTICE"
This design, drawing and detail is the copyrighted property of KELLER, INC. No part hereof shall be copied, duplicated, distributed, disclosed or made available to anyone without the expressed written consent of KELLER, INC.

REVISIONS

PROJECT MANAGER: D. FLANIGAN
DESIGNER: C. MEISEL
DRAWN BY: G. DEPREY
EXPEDITOR: S. LAMON
SUPERVISOR: D. CRAKER
PRELIMINARY NO: ------
CONTRACT NO: ------
DATE: 12/19/2022
SHEET: C8.0

Ruekert • Mielke
Waukesha • Kenosha • Madison
Global Water Center • Fox Valley
www.ruekertmielke.com

RUEKERT/MIELKE TAKES NO RESPONSIBILITY FOR ANY UNDERGROUND STRUCTURES OR BURIED MATERIALS SUCH AS, BUT NOT LIMITED TO, FOUNDATIONS, WELLS, SEPTIC, HOLDING TANKS, UTILITIES, HAZARDOUS MATERIALS, OR ANY OTHER ITEMS OF WHICH NO EVIDENCE CAN BE FOUND ON THE SURFACE BY A REASONABLE INSPECTION.

PURSUANT TO WISCONSIN STATUTE 182.0175, AVAILABLE DATA ON UNDERGROUND STRUCTURES, CONDUIT AND PIPES HAS BEEN SHOWN ON THIS MAP. THE LOCATIONS SHOWN HAVE BEEN COMPILED FROM A COMBINATION OF EXISTING UTILITY MAPS AND MARKINGS PLACED IN THE FIELD FOR THE VARIOUS FACILITIES BY "DIGGERS HOTLINE" (TICKET NO. 202114408347) SHALL NOT BE TAKEN AS CONCLUSIVE. FIELD VERIFICATION SHALL BE REQUIRED BEFORE ANY EXCAVATION.

CONSTRUCTION DETAILS

"ISSUED NOT FOR CONSTRUCTION"

Keller - Planners, Architects, Builders - An Employee Owned Company

Keller Commercial Standards

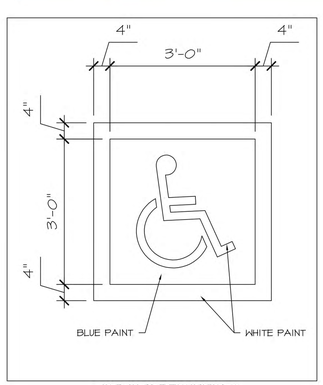

NOTE: ALL PAVEMENT MARKINGS TO BE SAFETY YELLOW UNLESS NOTED OTHERWISE

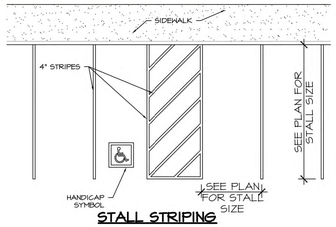

STALL STRIPING

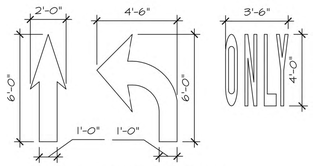

DIRECTION ARROWS

PAVEMENT MARKINGS | REVISION 5/2/2012 | 2.9.2

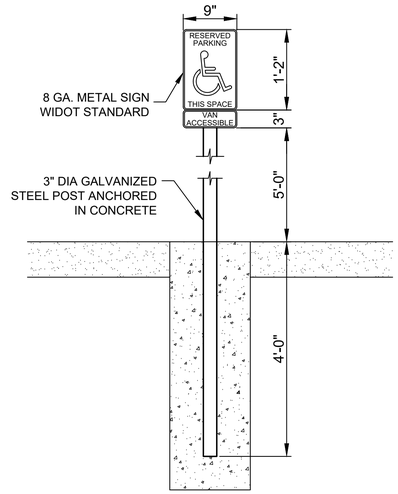

HANDICAP PARKING SIGN NO SCALE

PV-SIGN-01 1

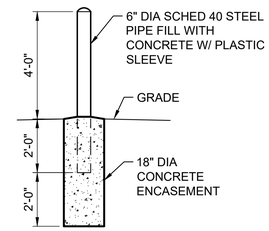

BOLLARD NO SCALE

SS-POST-01 1

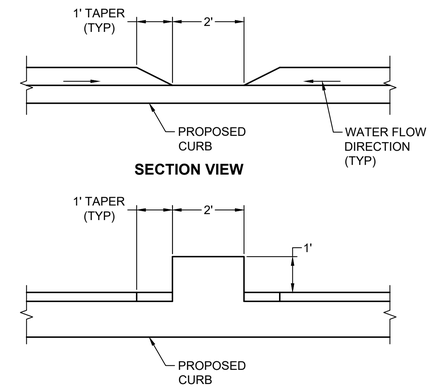

CONCRETE FLUME NO SCALE

PV-FLM-11 1

PLAN

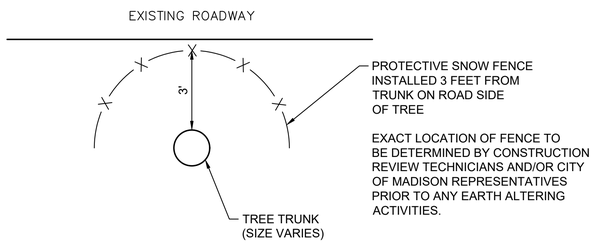

PROFILE

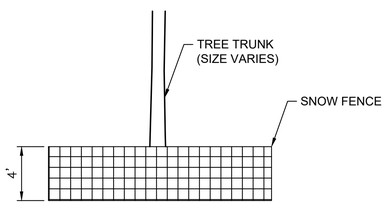

EXISTING TREE PROTECTIVE FENCING DETAIL NO SCALE

LS-GNL-02 1

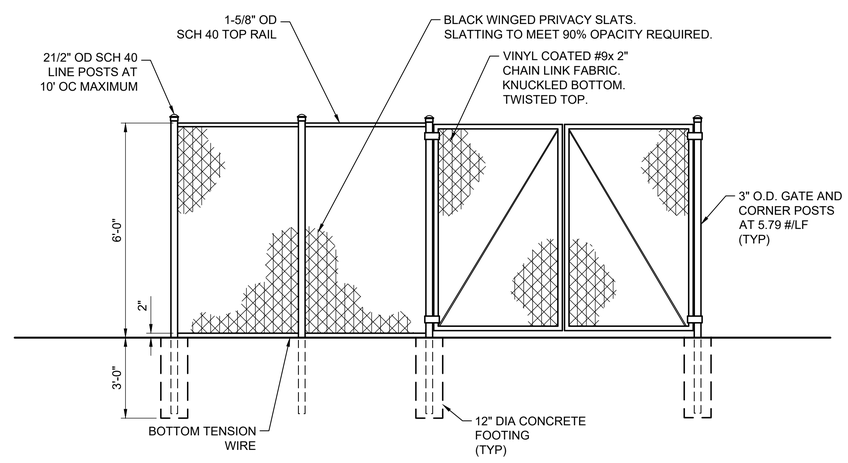

FENCING NO SCALE

SS-FENCE-07 64

Keller
PLANNERS | ARCHITECTS | BUILDERS

FOX CITIES
N216 State Road 55
P.O. Box 620
Kaukauna, WI 54130
Phone (920)766-5795
1-800-236-2534
Fax (920)766-5004

MADISON
3308 Nursery Drive
Middleton, WI 53562
Phone (608)445-2245

MILWAUKEE
W204 N11509
Goldendale Rd
Germantown, WI 53022
Phone (262)250-9710
1-800-236-2534
Fax (262)250-9740

WAUSAU
5605 Lilac Ave
Wausau, WI 54401
Phone (715)849-3141
Fax (715)849-3181

www.kellerbuilds.com

PROPOSED FOR: SOUTH CENTRAL LIBRARY MADISON WISCONSIN

"COPYRIGHT NOTICE"
This design, drawing and detail is the copyrighted property of KELLER, INC. No part hereof shall be copied, duplicated, distributed, disclosed or made available to anyone without the expressed written consent of KELLER, INC.

REVISIONS

PROJECT MANAGER: D. FLANIGAN
DESIGNER: C. MEISEL
DRAWN BY: G. DEPREY
EXPEDITOR: S. LAMON
SUPERVISOR: D. CRAKER
PRELIMINARY NO: -------
CONTRACT NO: -------
DATE: 12/19/2022
SHEET: C8.1

Ruekert•Mielke
Waukesha • Kenosha • Madison
Global Water Center • Fox Valley
www.ruekertmielke.com

RUEKERT/MIELKE TAKES NO RESPONSIBILITY FOR ANY UNDERGROUND STRUCTURES OR BURIED MATERIALS SUCH AS, BUT NOT LIMITED TO, FOUNDATIONS, WELLS, SEPTIC, HOLDING TANKS, UTILITIES, HAZARDOUS MATERIALS, OR ANY OTHER ITEMS OF WHICH NO EVIDENCE CAN BE FOUND ON THE SURFACE BY A REASONABLE INSPECTION.

PURSUANT TO WISCONSIN STATUTE 182.0175, AVAILABLE DATA ON UNDERGROUND STRUCTURES, CONDUIT AND PIPES HAS BEEN SHOWN ON THIS MAP. THE LOCATIONS SHOWN HAVE BEEN COMPILED FROM A COMBINATION OF EXISTING UTILITY MAPS AND MARKINGS PLACED IN THE FIELD FOR THE VARIOUS FACILITIES BY "DIGGERS HOTLINE" (TICKET NO. 202114408347) SHALL NOT BE TAKEN AS CONCLUSIVE. FIELD VERIFICATION SHALL BE REQUIRED BEFORE ANY EXCAVATION.

CONSTRUCTION DETAILS

"ISSUED NOT FOR CONSTRUCTION"

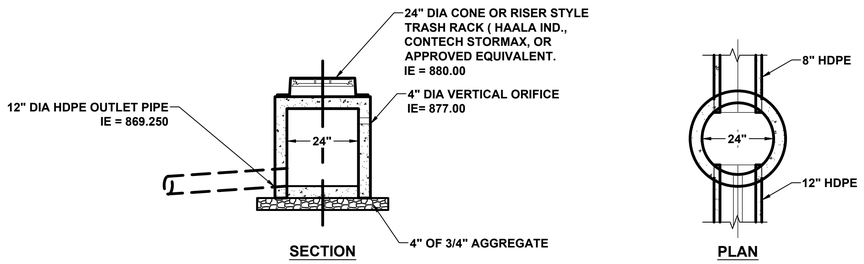

24" DIA BIOFILTER A CONTROL STRUCTURE

NO SCALE

Cgdt-Outlet Junction Structure 2

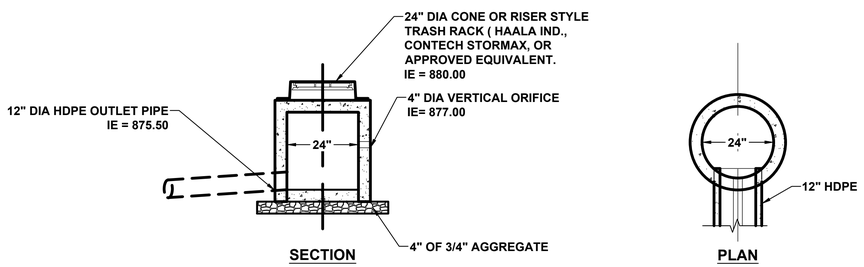

24" DIA BIOFILTER B CONTROL STRUCTURE

NO SCALE

Cgdt-Outlet Junction Structure 2

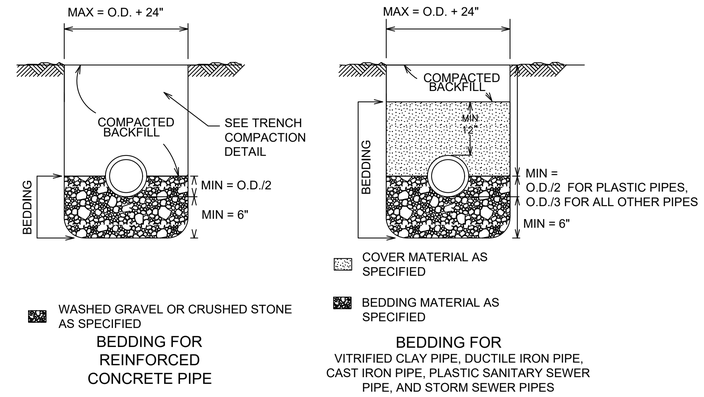

NOTES:

UNLESS OTHERWISE SPECIFIED, ALL SANITARY AND STORM SEWER PIPES, INCLUDING LATERALS AND LEADS,
SHALL BE INSTALLED WITH THE TYPE OF BEDDING SHOWN FOR THE TYPE AND SIZE OF PIPE INSTALLED.

THE COSTS OF BEDDING SHALL BE INCLUDED IN THE UNIT PRICES BID FOR THE PIPE.

ALL BEDDING SHALL BE MECHANICALLY COMPACTED.

THE MAXIMUM ALLOWABLE TRENCH WIDTH SHALL BE O.D. + 24", AND SHALL APPLY FROM THE BOTTOM OF THE TRENCH TO A POINT 12" ABOVE THE TOP OF THE PIPE. WHERE THIS WIDTH IS EXCEEDED, THE CONTRACTOR SHALL FURNISH AND INSTALL A HIGHER TYPE OF BEDDING AT NO EXTRA COST.

O.D. EQUALS THE OUTSIDE DIAMETER OF THE PIPE. THE MINIMUM DISTANCE OF O.D./2 IS SPECIFIED FOR PLASTIC SEWER PIPE.

PIPE BEDDING

NO SCALE

Cgdt-Pipe Bedding 64

NOTES:
ENGINEERED FILL SPECIFICATION - 70% SAND, 30% COMPOST
1. SAND COMPONENT CONFORMING TO EITHER:
   a. USDA COARSE SAND (.02-.04 INCHES)
   b. ASTM C33 (FINE AGGREGATE CONCRETE SAND)
   c. STATE SPECIFICATION 501.2.5.3.4
2. COMPOST COMPONENT CONFORMING TO:
   a. WDNR TECHNICAL SPECIFICATION S100

GRAVEL FILL LAYER SPECIFICATION:
1. GRAVEL SHALL MEET COARSE AGGREGATE #2 OF STATE SPECIFICATION 501.2.5
2. GRAVEL SHALL BE DOUBLE WASHED PRIOR TO INSTALLATION

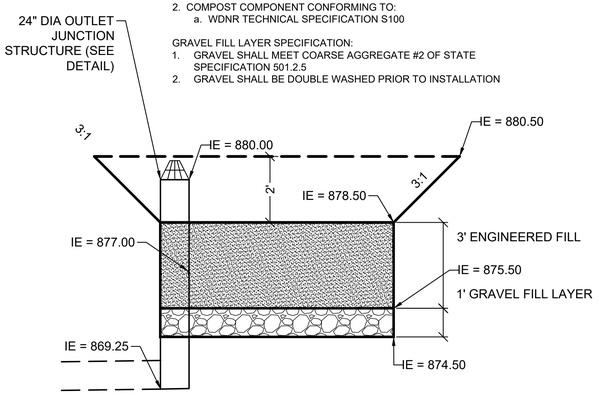

EXISTING BIOFILTER A

NO SCALE

Cgdt-Infiltration Basin 10

NOTES:
ENGINEERED FILL SPECIFICATION - 70% SAND, 30% COMPOST
1. SAND COMPONENT CONFORMING TO EITHER:
   a. USDA COARSE SAND (.02-.04 INCHES)
   b. ASTM C33 (FINE AGGREGATE CONCRETE SAND)
   c. STATE SPECIFICATION 501.2.5.3.4
2. COMPOST COMPONENT CONFORMING TO:
   a. WDNR TECHNICAL SPECIFICATION S100

GRAVEL FILL LAYER SPECIFICATION:
1. GRAVEL SHALL MEET COARSE AGGREGATE #2 OF STATE SPECIFICATION 501.2.5
2. GRAVEL SHALL BE DOUBLE WASHED PRIOR TO INSTALLATION

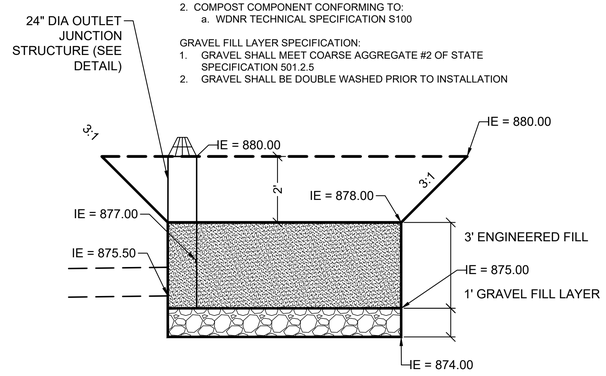

EXISTING BIOFILTER B

NO SCALE

Cgdt-Infiltration Basin 10

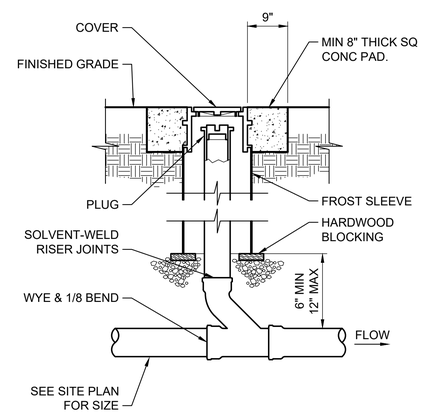

PAVEMENT AREA CLEANOUT

NO SCALE

SAN-CO-03A 1

Ruekert • Mielke
Waukesha • Kenosha • Madison
Global Water Center • Fox Valley
www.ruekertmielke.com

RUEKERT/MIELKE TAKES NO RESPONSIBILITY FOR ANY UNDERGROUND STRUCTURES OR BURIED MATERIALS SUCH AS, BUT NOT LIMITED TO, FOUNDATIONS, WELLS, SEPTIC, HOLDING TANKS, UTILITIES, HAZARDOUS MATERIALS, OR ANY OTHER ITEMS OF WHICH NO EVIDENCE CAN BE FOUND ON THE SURFACE BY A REASONABLE INSPECTION.

PURSUANT TO WISCONSIN STATUTE 182.0175, AVAILABLE DATA ON UNDERGROUND STRUCTURES, CONDUIT AND PIPES HAS BEEN SHOWN ON THIS MAP. THE LOCATIONS SHOWN HAVE BEEN COMPILED FROM A COMBINATION OF EXISTING UTILITY MAPS AND MARKINGS PLACED IN THE FIELD FOR THE VARIOUS FACILITIES BY "DIGGERS HOTLINE" (TICKET NO. 202114408347) SHALL NOT BE TAKEN AS CONCLUSIVE. FIELD VERIFICATION SHALL BE REQUIRED BEFORE ANY EXCAVATION.

Keller™
PLANNERS | ARCHITECTS | BUILDERS

FOX CITIES
N216 State Road 55
P.O. Box 620
Kaukauna, WI 54130
Phone (920)766-5795
1-800-236-2534
Fax (920)766-5004

MADISON
3308 Nursery Drive
Middleton, WI 53562
Phone (608)445-2245

MILWAUKEE
W204 N11509
Goldendale Rd
Germantown, WI 53022
Phone (262)250-9710
1-800-236-2534
Fax (262)250-9740

WAUSAU
5605 Lilac Ave
Wausau, WI 54401
Phone (715)849-3141
Fax (715)849-3181

www.kellerbuilds.com

PROPOSED FOR:
SOUTH CENTRAL LIBRARY
MADISON WISCONSIN

"COPYRIGHT NOTICE"
This design, drawing and detail is the copyrighted property of KELLER, INC. No part hereof shall be copied, duplicated, distributed, disclosed or made available to anyone without the expressed written consent of KELLER, INC.

REVISIONS

PROJECT MANAGER: D. FLANIGAN
DESIGNER: C. MEISEL
DRAWN BY: G. DEPREY
EXPEDITOR: S. LAMON
SUPERVISOR: D. CRAKER
PRELIMINARY NO: _____
CONTRACT NO: _____
DATE: 12/19/2022
SHEET: C8.2

CONSTRUCTION DETAILS

"ISSUED NOT FOR CONSTRUCTION"

PLANT LIST

SYM	BOTANIC NAME	COMMON NAME	SIZE	QTY	PTS
	SHADE TREES				
GYDI	Gymnocladus dioicus 'Espresso'	Kentucky Coffeetree	2.5"	2	70
			Sub-total		70
	LARGE SHRUBS				
COCA	Cotoneaster acutifolia	Peking Cotoneaster	2.5'	7	21
COSE	Cornus sericea 'Isanti'	Redosier Dogwood	2.5'	9	27
HYQU	Hydrangea quercifolia 'Ruby Slippers'	Oakleaf Hydrangea	2.5'	7	21
SYME	Syringa meyeri 'Palibin'	Dwarf Korean Lilac	2.5'	10	30
VIDE	Viburnum dentatum 'Christom'	Blue Muffin Arrowwood Viburnum	2.5'	14	42
VICA	Viburnum carlesii	Korean Spice Viburnum	2.5'	7	21
			Sub-total		162
	SMALL SHRUBS				
DISE	Diervilla sessilifolia 'Butterfly'	Bush Honeysuckle	1.5'	16	48
HYKA	Hypericum kalmianum 'SMHKBF'	Hypericum Blues Festival	1.5'	11	33
JUCH	Juniperus chinensis 'Kallay's Compact'	Kallay's Compact Juniper	1.5'	12	48
POBA	Potentilla fruticosa 'Bailbrule'	Crème Brulee Potentilla	1.5'	22	66
POFR	Potentilla fruticosa 'Jackmanii'	Jackman's Potentilla	1.5'	13	39
SPJA	Spiraea japonica 'Yan'	Spirea Double Play Gold	1.5'	25	75
SYSO	Symphoricarpos sp. 'Sofie'	Proud Berry Coralberry	1.5'	12	36
			Sub-total		345
			Total Proposed		577
			Preserve 25 ex. trees		55
			Project Total		632
			Required for Project		182

NOTES

1. All disturbed turf areas will be seeded with WISDOT turf mixture 10 at 3 pounds per 1000sf and covered with erosion blanket.
2. Topsoil depth shall be per the Engineers drawings. Recommend a 12" min. depth for all new landscape areas.
3. All trees and shrub beds shall be mulched with three inch (3") depth of shredded bark mulch.
4. Remove plants and weeds from foundation beds with existing building, leaving only the plants shown.

EXISTING TREE LIST

Sym.	Size	Species	Points
A	6"	Linden	84
B	8"	Riverbirch	112
C	6"	Riverbirch	84
D	3"	Japanese Lilac	42
E	12"	Norway Maple	168
F	13"	Norway Maple	182
G	9"	Hackberry	126
H	8"	Redbud	112
I	10"	Hackberry	140
J	10"	Hackberry	140
K	4"	Redbud	56
L	10"	Hackberry	140
M	10"	Hackberry	140
N	16"	Locust	200 (224)
O	13"	Hackberry	182
P	8"	Austrian Pine	112
Q	9"	Austrian Pine	126
R	8"	Austrian Pine	112
S	12"	Hackberry	168
T	7"	Austrian Pine	98
U	8"	Red Maple	112
V	7"	Riverbirch	98
W	8"	Riverbirch	112
X	10"	Riverbirch	140
Y	5"	Red Maple	70
		Total	3056

Keller
PLANNERS | ARCHITECTS | BUILDERS

FOX CITIES
N216 State Road 55
P.O. Box 620
Kaukauna, WI 54130
Phone (920)766-5795
1-800-236-2534
Fax (920)766-5004

MADISON
3308 Nursery Drive
Middleton, WI 53562
Phone (608)445-2245

MILWAUKEE
W204 N11509
Goldendale Rd
Germantown, WI 53022
Phone (262)250-9710
1-800-236-2534
Fax (262)250-9740

WAUSAU
5605 Lilac Ave
Wausau, WI 54401
Phone (715)849-3141
Fax (715)849-3181

www.kellerbuilds.com

PROPOSED FOR:
SOUTH CENTRAL LIBRARY
MADISON WISCONSIN

"COPYRIGHT NOTICE"
This design, drawing and detail is the copyrighted property of KELLER, INC. No part hereof shall be copied, duplicated, distributed, disclosed or made available to anyone without the expressed written consent of KELLER, INC.

REVISIONS

PROJECT MANAGER: P. VARGULICH
DESIGNER: P. VARGULICH
DRAWN BY: D. BOOR
EXPEDITOR: -------
SUPERVISOR: -------
PRELIMINARY NO: ------
CONTRACT NO: ------
DATE: 12/19/2022
SHEET: L1.0

Ruekert•Mielke
Waukesha • Kenosha • Madison
Global Water Center • Fox Valley
www.ruekertmielke.com

RUEKERT/MIELKE TAKES NO RESPONSIBILITY FOR ANY UNDERGROUND STRUCTURES OR BURIED MATERIALS SUCH AS, BUT NOT LIMITED TO, FOUNDATIONS, WELLS, SEPTIC, HOLDING TANKS, UTILITIES, HAZARDOUS MATERIALS, OR ANY OTHER ITEMS OF WHICH NO EVIDENCE CAN BE FOUND ON THE SURFACE BY A REASONABLE INSPECTION.

PURSUANT TO WISCONSIN STATUTE 182.0175, AVAILABLE DATA ON UNDERGROUND STRUCTURES, CONDUIT AND PIPES HAS BEEN SHOWN ON THIS MAP. THE LOCATIONS SHOWN HAVE BEEN COMPILED FROM A COMBINATION OF EXISTING UTILITY MAPS AND MARKINGS PLACED IN THE FIELD FOR THE VARIOUS FACILITIES BY "DIGGERS HOTLINE" (TICKET NO. 202114408347) SHALL NOT BE TAKEN AS CONCLUSIVE. FIELD VERIFICATION SHALL BE REQUIRED BEFORE ANY EXCAVATION.

THE LANDSCAPE ARCHITECT AND HIS CONSULTANTS DO NOT WARRANT OR GUARANTEE THE ACCURACY AND COMPLETENESS OF THE WORK PRODUCT THEREIN BEYOND A REASONABLE DILIGENCE. IF ANY MISTAKES, OMISSIONS, OR DISCREPANCIES ARE FOUND TO EXIST WITH THE WORK PRODUCT, THE LANDSCAPE ARCHITECT SHALL BE PROMPTLY NOTIFIED SO THAT HE MAY HAVE THE OPPORTUNITY TO TAKE ANY STEPS NECESSARY TO RESOLVE THEM. FAILURE TO PROMPTLY NOTIFY THE LANDSCAPE ARCHITECT OF SUCH CONDITIONS SHALL ABSOLVE THE LANDSCAPE ARCHITECT FROM ANY RESPONSIBILITY FOR THE CONSEQUENCES OF THE CONDITIONS. ACTIONS AND/OR OMISSIONS TAKEN BY THE OWNER, CONTRACTOR OR LANDSCAPE CONTRACTOR, OR IN CONTRADICTION TO THE LANDSCAPE ARCHITECT'S WORK PRODUCT, OR RECOMMENDATIONS, SHALL BECOME THE RESPONSIBILITY NOT OF THE LANDSCAPE ARCHITECT, BUT OF THE PARTIES RESPONSIBLE FOR THE TAKING OF SUCH ACTION.

BLUE STEM DESIGN, INC.
Planning – Urban Design – Landscape Architecture
503 S. 16th Street, St Charles IL 60174
630-618-8316

LANDSCAPE PLAN

"ISSUED NOT FOR CONSTRUCTION"

SOUTH CENTRAL LIBRARY

MADISON, WISCONSIN

Keller
Planners | Architects | Builders
Offices in the Twin Cities, Madison, Milwaukee and Warsaw

CONCEPT ONLY

KEYED PLAN NOTES

3 6" DIAMETER STEEL PIPE BOLLARD, FILLED SOLID W/CONC, PRIMED, PROVIDE PLASTIC SLEEVE COVER
4 CATCH BASIN ASSEMBLY, BY PLUMBING CONTRACTOR, TYP. PROVIDE OIL SEPARATOR(S) AS REQUIRED, PER LOCAL/ STATE CODES (FINISH COVER & RING WITH POWDER COAT PAINT, BLACK). PLUMBING CONTRACTOR TO VERIFY QUANTITY, LOCATION AND REQUIREMENTS. REFER TO PLUMBING DRAWINGS.
5 4" TRENCH DRAIN SYSTEM, REFER TO PLUMBING DRAWINGS.
6 RELOCATED BIKE RACK. COORDINATE WITH OWNER.
7 AIR DROP.
8 CURB STOP, BY OWNER.
10 4 POST HOIST (18' CLEAR HEIGHT). PROVIDED BY OWNER.
11 SHELVING, BY OWNER. VERIFY FINAL LOCATION WITH OWNER.
12 ROOF ACCESS LADDER TO ROOF ACCESS HATCH, REFER TO PLANS & DETAILS, TYP. (PAINT LADDER WITH EPOXY PAINT).
13 TRAFFIC RAIL ON 6" BOLLARDS @ 4'-0" O.C.
14 TOOL CHEST, BY OWNER. VERIFY FINAL LOCATION WITH OWNER.
15 WORKBENCH. VERIFY FINAL LOCATION AND REQUIREMENTS WITH OWNER.
16 55 GALLON DRUMS, BY OWNER. VERIFY FINAL LOCATION WITH OWNER.
17 TIG WELDER, BY OWNER. VERIFY FINAL LOCATION WITH OWNER.
18 DRILL PRESS, BY OWNER. VERIFY FINAL LOCATION WITH OWNER.
19 UTILITY SINK, COORDINATE LOCATION W/ PLUMBING CONTRACTOR/OWNER. REFER TO PLUMBING DRAWINGS.
20 HOSE REEL.
21 DOCK LEVELERS, PROVIDED BY OWNER FROM EXISTING BUILDING.
22 RETAINING WALL W/ PEDESTRIAN RAILING.
23 CARTS, BY OWNER. VERIFY FINAL LOCATION WITH OWNER.
24 EXISTING COLUMN
25 WALL MOUNTED FIRE EXSTINGUISHER, REFER TO LIFE SAFETY PLAN FOR ADDT'L. INFO.
26 CUBICLES, BY OWNER.
27 RELOCATED CASEWORK FROM DIGITIZATION ROOM 128.
28 BOOKSHELVES, BY OWNER.
29 RELOCATED CASEWORK FROM HALLWAY BY DIGITIZATION 128.
30 FURNITURE, BY OWNER. VERIFY FINAL LOCATION WITH OWNER.

KEYED PLAN NOTES

31 SOUND BAR, BY OWNER.
32 ELECTRICAL PANELS & EQUIPMENT, COORDINATE LOCATION W/ ELECTRICAL CONTRACTOR/OWNER. REFER TO ELECTRICAL DRAWINGS.
33 COPY MACHINE AND PRINTER, BY OWNER - CONTRACTOR TO SUPPLY POWER/DATA/PHONE. VERIFY LOCATION WITH OWNER AND OWNER'S FURNITURE VENDOR.
34 DRINKING FOUNTAIN WITH BOTTLE FILLER, REFER TO PLUMBING DRAWINGS.
35 LAMINATOR, BY OWNER, W/ 5' EXHAUST HOOD ABOVE. VERIFY FINAL LOCATION WITH OWNER.
36 STEEL STAIR ASSEMBLY AND 1 1/2" PAINTED STEEL PIPE RAIL, REFER TO STAIR SECTION FOR ADDITIONAL INFORMATION. RAILING TO BE PAINTED WITH RUSTOLEUM, INDUSTRIAL DTM URETANE MASTIC, VERIFY COLOR PRIOR TO ORDERING PAINT.
37 PLAM CABINET AND COUNTERTOP. FINAL DRAWINGS BY MILLWORK CONTRACTOR.
38 WORK COUNTER. VERIFY EXACT LOCATION AND REQUIREMENTS WITH OWNER.
39 FLAT SCREEN T.V. CONTRACTOR TO PROVIDE BLOCKING AND POWER/DATA AT MOUNTING HT. CONTRACTOR SHALL PROVIDE EMPTY CONDUIT TO T.V. FOR VIDEO CONNECTIONS. VERIFY EXACT REQUIREMENTS WITH OWNER.
40 WHITE BOARD, BY OWNER. VERIFY FINAL LOCATION WITH OWNER.
41 SOLID SURFACE WINDOW SILL.
42 PAINT EXPOSED COLUMNS.
43 HOSE BIB BY PLUMBING CONTRACTOR, REFER TO PLUMBING PLANS.
44 PROTECTICE SECURITY FILM OVER EXISTING GLAZING.
46 MAIL SLOTS W/ DELIVERY BELOW. FINAL DRAWINGS BY MILLWORK CONTRACTOR.
47 LINE DRYER. CONTRACTOR TO VERIFY REQUIREMENTS.
48 COMPRESSOR. CONTRACTOR TO VERIFY REQUIREMENTS.
50 CT CABINET AND PANEL.
51 SERVERS.

GENERAL FLOOR PLAN NOTES:

- CONSTRUCTION & INSTALLATION SHALL CONFORM TO ALL APPLICABLE LOCAL, STATE & NATIONAL BUILDING CODES & THE AMERICANS WITH DISABILITY ACT.
- ALL NEW WALLS SHALL BE CONSTRUCTED AS PER THE WALL TYPE & SHALL BE CARRIED TO THE STRUCTURE ABOVE, UNLESS OTHERWISE NOTED. PREPARE ALL SURFACES FOR FINISHES INDICATED.
- CONTRACTOR TO PROVIDE BLOCKING FOR ALL WALL SUPPORTED CASEWORK, TOILET ACCESSORIES, HANDRAILS, EQUIPMENT, DOOR STOPS, SHELVING, ETC. AS REQUIRED
- CONTRACTOR SHALL COORDINATE ALL WORK WITH EQUIPMENT MANUFACTURERS TO ENSURE APPROPRIATE ROUGH IN CLEARANCE FOR EQUIPMENT INSTALLATION & USE.
- WHERE MOUNTING HEIGHTS ARE NOT INDICATED, MOUNT INDIVIDUAL UNITS OF WORK AT A.D.A. STANDARD MOUNTING HEIGHTS FOR THE PARTICULAR APPLICATION INDICATED. REFER QUESTIONABLE MOUNTING HEIGHT CHOICES TO THE ARCHITECT FOR A FINAL DECISION.
- DO NOT SCALE THE DRAWINGS.
- ALL DIMENSIONS AND INTERIOR WALL THICKNESSES ARE FROM THE FACE OF STUD TO FACE OF STUD, UNLESS NOTED OTHERWISE.
- CONTRACTOR SHALL LAYOUT & MARK ALL WALLS & OPENINGS PRIOR TO CONSTRUCTION. ANY DISCREPANCY SHALL BE REPORTED TO THE ARCHITECT IMMEDIATELY FOR RESOLUTION.
- ALL FURNITURE AND EQUIPMENT NOT SPECIFICALLY NOTED ON PLANS SHALL BE SUPPLIED AND INSTALLED BY OWNER. CONTRACTOR SHALL COORDINATE ALL ELECTRICAL & DATA OUTLETS, ETC W/ FINAL FURNITURE LAYOUT DRAWINGS.
- ALL DOOR OFFSETS (HINGE SIDE) TO BE A MINIMUM OF 4", UNLESS NOTED OTHERWISE.
- ALL GYP. BOARD SHALL RETURN TO ALL WINDOW/DOOR FRAMES AT JAMBS & HEAD, TYPICAL, UNLESS NOTED OTHERWISE.
- PROVIDE 8' HIGH CORNER GUARDS AT OUTSIDE OF ALL DRYWALL CORNERS. INPRO, TAPE-ON WITHOUT FOAM, USE APPLIED ADHESIVE. COLOR: TBD. 1-1/2" WINGS, START AT TOP OF VINYL BASE.
- CONTRACTOR TO PROIVIDE ALL NECESSARY PERMITS & FEES REQUIRED TO COMPLETE THE PROJECT.
- PAINT EXPOSED DUCTWORK & CONDUIT.

STANDARD FLOOR PLAN NOTATION:

F.E.C. - INDICATES SEMI-RECESSED FIRE EXTINGUISHER CABINET

F.E. - INDICATES FIRE EXTINGUISHER - MIN. 10# "A-B-C" (UNLESS NOTED OTHERWISE) OR OTHER AS REQ'D. BY STATE AND/OR LOCAL CODE. SEE SPECIFICATIONS. (MOUNT AT 4'-0" A.F.F. MAX. TO TOP/EXTINGUISHER).

- INDICATES WALL TYPES, REFER TO INT. WALL TYPES FOR INFORMATION.

- SHADED FURNITURE BY OWNER

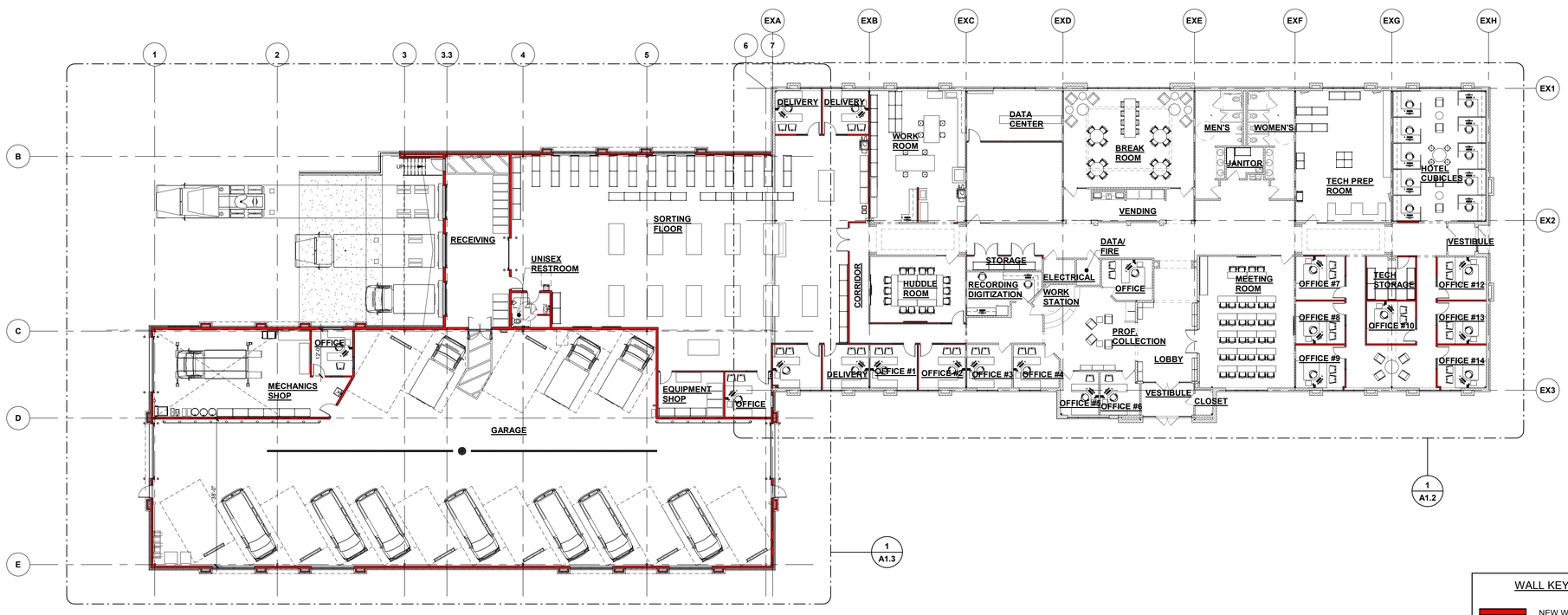

NORTH

OVERALL FLOOR PLAN

1/16" = 1'-0"

WALL KEY

- NEW WALL/FURRING
- NEW MASONRY/ VENEER WALL
- NEW FOUNDATION WALL
- TYPICAL EXISTING WALL
- DEMO WALLS
- FIRE WALL OR FIRE BARRIER

Keller
PLANNERS | ARCHITECTS | BUILDERS

FOX CITIES
N216 State Road 55
P.O. Box 620
Kaukauna, WI 54130
PHONE (920) 766-5795 / 1-800-236-2534
FAX (920) 766-5004

MADISON
711 Lois Dr.
Sun Prairie, WI 53590
PHONE (608) 318-2336
FAX (608) 318-2337

MILWAUKEE
W204 N11509
Goldendale Rd
Germantown, WI 53022
PHONE (262) 250-9710 1-800-236-2534
FAX (262) 250-9740

WAUSAU
5605 Lilac Ave
Wausau, WI 54401
PHONE (715) 849-3141
FAX (715) 849-3181

www.kellerbuilds.com

PROPOSED FOR:
SOUTH CENTRAL LIBRARY
MADISON, WISCONSIN

"COPYRIGHT NOTICE"
This design, drawing and detail is the copyrighted property of KELLER, INC. No part hereof shall be copied, duplicated, distributed, disclosed or made available to anyone without the expressed written consent of KELLER, INC.

PRELIMINARY - NOT FOR CONSTRUCTION

REVISIONS

1		
2		
3		
4		
5		
6		

PROJECT MANAGER: D. FLANIGAN
DESIGNER: R. LINDSTROM
DRAWN BY: NML
EXPEDITOR: -------
SUPERVISOR: -------
PRELIMINARY NO: P21289
CONTRACT NO: -------
DATE: 12.19.2022
SHEET: A1.1

REFER TO SHEET A1.1 FOR KEYED & GENERAL FLOOR PLAN NOTES

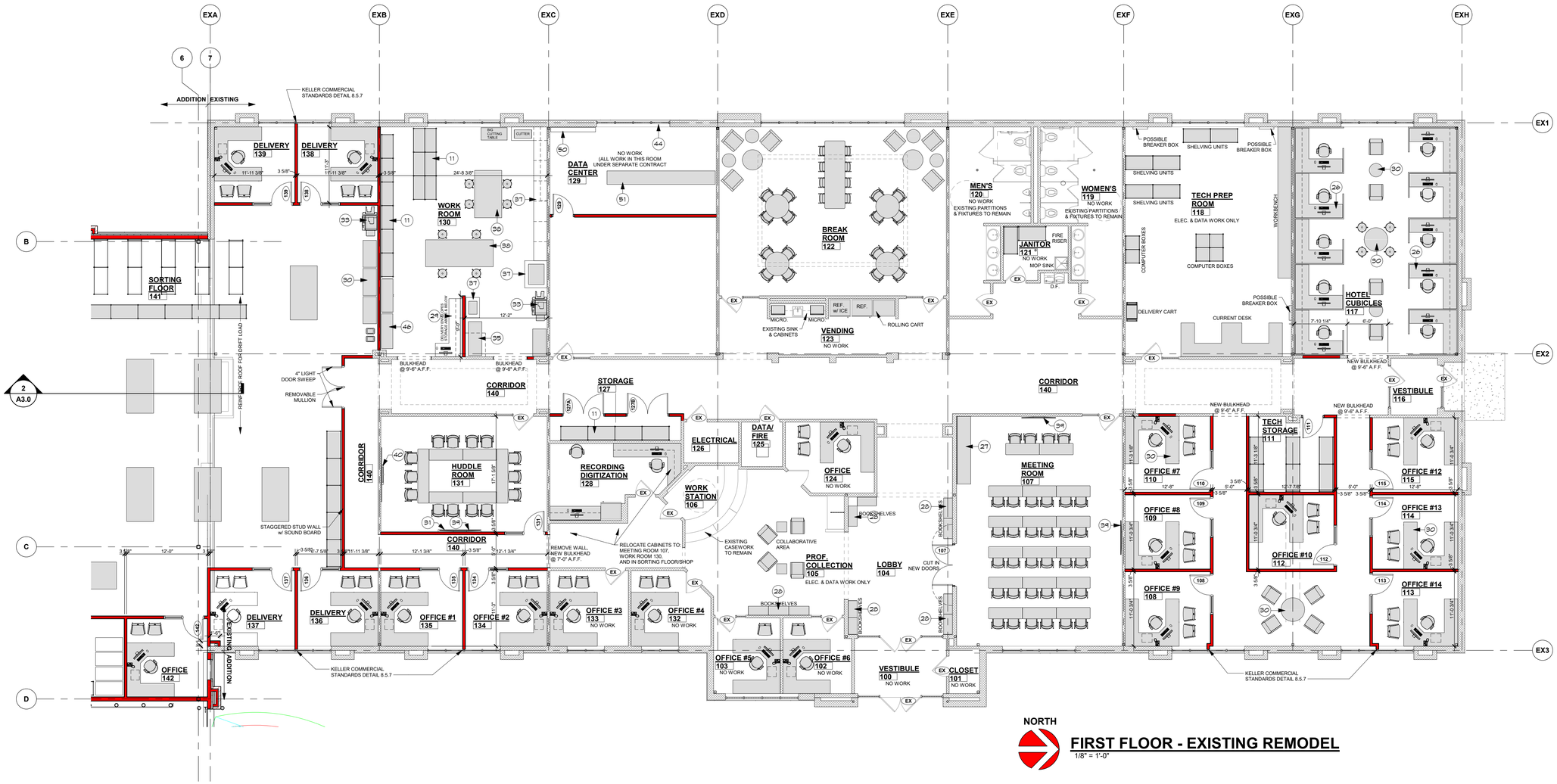

NORTH

FIRST FLOOR - EXISTING REMODEL

1/8" = 1'-0"

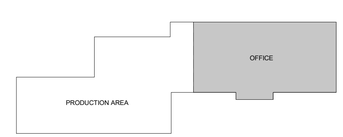

WALL KEY

- NEW WALL/FURRING
- NEW MASONRY/ VENEER WALL
- NEW FOUNDATION WALL
- TYPICAL EXISTING WALL
- DEMO WALLS
- FIRE WALL OR FIRE BARRIER

Keller
PLANNERS | ARCHITECTS | BUILDERS

FOX CITIES
N216 State Road 55
P.O. Box 620
Kaukauna, WI 54130
PHONE (920) 766-5795 / 1-800-236-2534
FAX (920) 766-5004

MADISON
711 Lois Dr.
Sun Prairie, WI 53590
PHONE (608) 318-2336
FAX (608) 318-2337

MILWAUKEE
W204 N11509
Goldendale Rd
Germantown, WI 53022
PHONE (262) 250-9710 1-800-236-2534
FAX (262) 250-9740

WAUSAU
5605 Lilac Ave
Wausau, WI 54401
PHONE (715) 849-3141
FAX (715) 849-3181

www.kellerbuilds.com

PROPOSED FOR:

SOUTH CENTRAL LIBRARY

MADISON, WISCONSIN

"COPYRIGHT NOTICE"

This design, drawing and detail is the copyrighted property of KELLER, INC. No part hereof shall be copied, duplicated, distributed, disclosed or made available to anyone without the expressed written consent of KELLER, INC.

PRELIMINARY - NOT FOR CONSTRUCTION

REVISIONS

1		
2		
3		
4		
5		
6		

PROJECT MANAGER: D. FLANIGAN

DESIGNER: R. LINDSTROM

DRAWN BY: NML

EXPEDITOR: -------

SUPERVISOR: -------

PRELIMINARY NO: P21289

CONTRACT NO: -------

DATE: 12.19.2022

SHEET: A1.2

REFER TO SHEET A1.1 FOR KEYED & GENERAL FLOOR PLAN NOTES

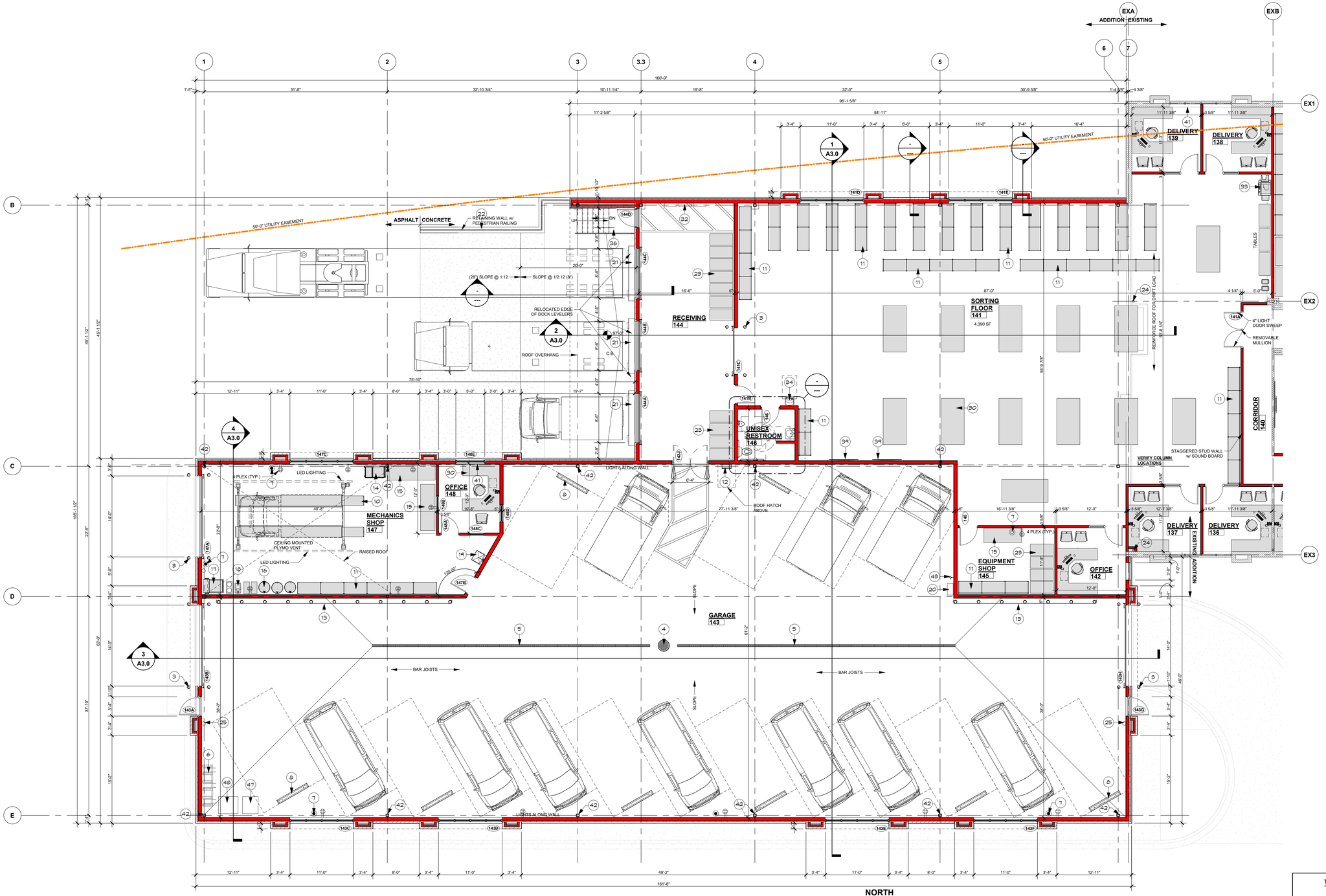

FIRST FLOOR - ADDITION

1/8" = 1'-0"

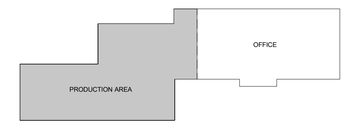

WALL KEY

- NEW WALL/FURRING
- NEW MASONRY/ VENEER WALL
- NEW FOUNDATION WALL
- TYPICAL EXISTING WALL
- DEMO WALLS
- FIRE WALL OR FIRE BARRIER

Keller
PLANNERS | ARCHITECTS | BUILDERS

FOX CITIES
N216 State Road 55
P.O. Box 620
Kaukauna, WI 54130
PHONE (920) 766-5795 / 1-800-236-2534
FAX (920) 766-5004

MADISON
711 Lois Dr.
Sun Prairie, WI 53590
PHONE (608) 318-2336
FAX (608) 318-2337

MILWAUKEE
W204 N11509
Goldendale Rd
Germantown, WI 53022
PHONE (262) 250-9710 / 1-800-236-2534
FAX (262) 250-9740

WAUSAU
5605 Lilac Ave
Wausau, WI 54401
PHONE (715) 849-3141
FAX (715) 849-3181

www.kellerbuilds.com

PROPOSED FOR:

SOUTH CENTRAL LIBRARY

MADISON, WISCONSIN

"COPYRIGHT NOTICE"

This design, drawing and detail is the copyrighted property of KELLER, INC. No part hereof shall be copied, duplicated, distributed, disclosed or made available to anyone without the expressed written consent of KELLER, INC.

PRELIMINARY - NOT FOR CONSTRUCTION

REVISIONS

1		
2		
3		
4		
5		
6		

PROJECT MANAGER: D. FLANIGAN

DESIGNER: R. LINDSTROM

DRAWN BY: NML

EXPEDITOR: -------

SUPERVISOR: -------

PRELIMINARY NO: P21289

CONTRACT NO: -------

DATE: 12.19.2022

SHEET: A1.3

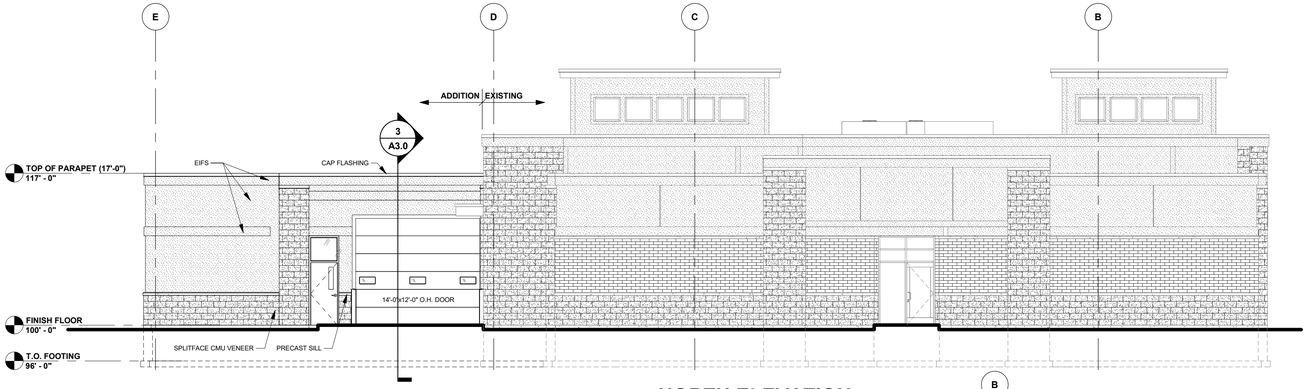

NORTH ELEVATION

1/8" = 1'-0"

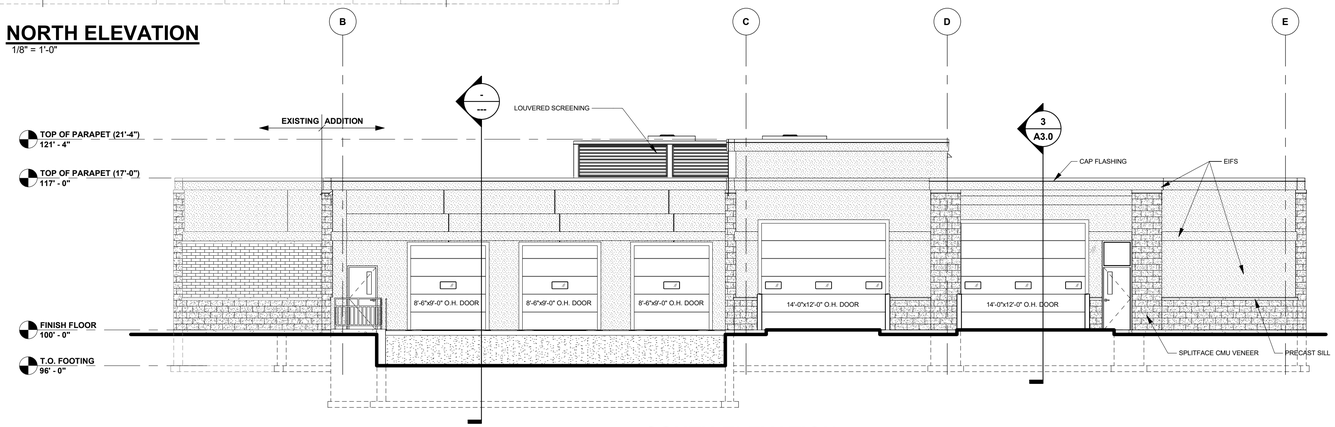

SOUTH ELEVATION

1/8" = 1'-0"

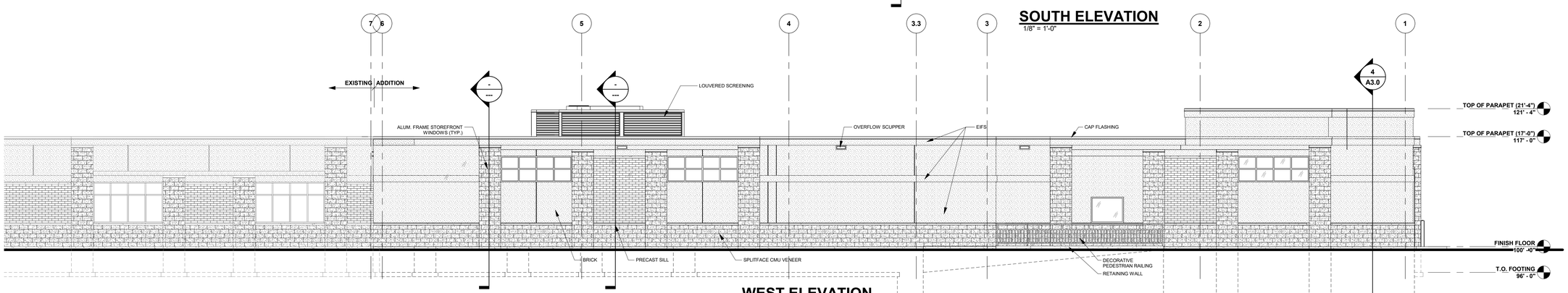

WEST ELEVATION

1/8" = 1'-0"

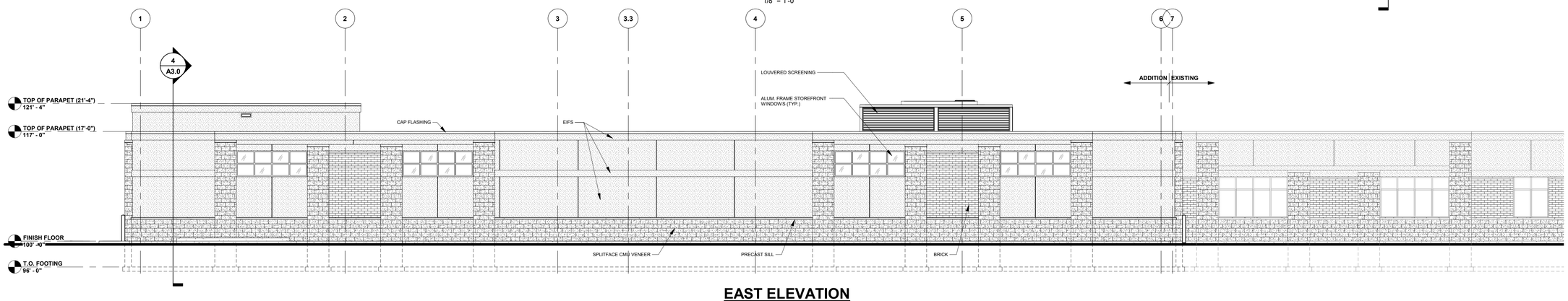

EAST ELEVATION

1/8" = 1'-0"

Keller
PLANNERS | ARCHITECTS | BUILDERS

FOX CITIES
N216 State Road 55
P.O. Box 620
Kaukauna, WI 54130
PHONE (920) 766-5795 / 1-800-236-2534
FAX (920) 766-5004

MADISON
711 Lois Dr.
Sun Prairie, WI 53590
PHONE (608) 318-2336
FAX (608) 318-2337

MILWAUKEE
W204 N11509
Goldendale Rd
Germantown, WI 53022
PHONE (262) 250-9710 1-800-236-2534
FAX (262) 250-9740

WAUSAU
5605 Lilac Ave
Wausau, WI 54401
PHONE (715) 849-3141
FAX (715) 849-3181

www.kellerbuilds.com

PROPOSED FOR:

SOUTH CENTRAL LIBRARY

MADISON, WISCONSIN

"COPYRIGHT NOTICE"

This design, drawing and detail is the copyrighted property of KELLER, INC. No part hereof shall be copied, duplicated, distributed, disclosed or made available to anyone without the expressed written consent of KELLER, INC.

PRELIMINARY - NOT FOR CONSTRUCTION

REVISIONS

1		
2		
3		
4		
5		
6		

PROJECT MANAGER: D. FLANIGAN

DESIGNER: R. LINDSTROM

DRAWN BY: NML

EXPEDITOR: -------

SUPERVISOR: -------

PRELIMINARY NO: P21289

CONTRACT NO: -------

DATE: 12.19.2022

SHEET: A2.0