EXHIBIT B

LICENSE

(This document is a license of less than 99 years and not a conveyance subject to Transfer Return and fee per Sec. 77.21(1) Wis. Stats.)

This License is entered into this _____ day of _____, 2022, by and between the **City of Madison**, a Wisconsin municipal corporation, located in Dane County, Wisconsin ("City"), and **New Cingular Wireless PCS, LLC**, a Delaware limited liability company ("Licensee").

RETURN TO: City of Madison
Economic Development Division
Office of Real Estate Services
P.O. Box 2983
Madison, WI 53701-2983

Tax Parcel No.: 251/0608-014-0501-5 (part of)

WITNESSETH:

WHEREAS, the City and TeleCorp Realty, LLC are parties to that certain License, dated June 25, 2002, as amended, and recorded with the Dane County Register of Deeds on July 2, 2002 as Document No. 3509221 (the "2002 License"); and

WHEREAS, the Licensee is the successor to TeleCorp Realty, LLC; and

WHEREAS, the 2002 License pertains to the placement by the Licensee of telecommunications equipment on the City-owned water tower located at 2829 Prairie Road, Madison, Wisconsin, together with the placement of equipment cabinets for housing telecommunications equipment on land near the base of the tower; and

WHEREAS, the term of the 2002 License is scheduled to expire on June 30, 2022, and the Licensee desires to continue to operate and maintain its telecommunications equipment at the site, and the City is agreeable to allowing such continued use.

NOW, THEREFORE, the Parties hereby agree as follows:

1. Termination of 2002 License. The 2002 License shall terminate effective as of midnight of the day immediately preceding the "Effective Date" set forth in Paragraph 3.

2. Premises. The City hereby grants to the Licensee the continued right to place telecommunications antennas and ancillary equipment on the City-owned water tower ("Tower") located at 2829 Prairie Road, Madison, Wisconsin, and to place telecommunications equipment within equipment cabinets on land near the base of the Tower ("Land"). The Tower and the Land are located on property ("Property") described on Exhibit A and are depicted on Exhibit B, which exhibits are attached hereto and incorporated herein by reference. The Land and the space on the Tower are hereinafter collectively referred to as the "Premises".

3. Term. This License shall be for an initial term of five (5) years, subject to early revocation or termination pursuant to the terms of this License. This License shall commence as of July 1, 2022 (the "Effective Date") and expire on June 30, 2027.

4. Renewal. This License may be renewed for three (3) subsequent five (5) year terms upon agreement of the parties as to the terms of the renewal. If the Licensee desires to renew this License, the Licensee must give notice in writing to the City a minimum of one hundred eighty (180) days prior to the expiration of the initial term or any renewal term in the manner specified in Paragraph 27. Following receipt of such notice, the City shall indicate by written notice to the Licensee, given within sixty (60) days after receipt of the Licensee's notice, of its approval or denial of the Licensee's request for renewal.

5. Hold Over. In the event the Licensee shall continue to occupy or use the Premises after the expiration of this License or any extension thereof, such holding over shall be deemed to constitute an occupancy from month to month, upon the same terms and conditions as herein provided except that a License Fee equal to one-twelfth (1/12) of the annual License Fee shall be paid monthly in advance, and in no event shall the occupancy be deemed to be from one (1) year to one (1) year.

6. Use.

   a. The Licensee's use of the Premises shall be limited to the placement, construction, operation, maintenance, repair, replacement and removal of up to twelve (12) telecommunications antennas ("Antenna" or "Antennas") on the Tower. The Licensee shall also be permitted to install ancillary equipment (e.g remote radio units, tower mounted amplifiers, etc.) ("Ancillary Equipment") on the Tower. The Antennas and Ancillary Equipment are hereinafter collectively referred to as the "Equipment".

   b. The Licensee shall also be permitted to operate, maintain, repair, replace and remove the existing communications equipment cabinets ("Equipment Cabinets") on the Land, together with wiring and conduit necessary to connect the Equipment on the Tower and the Equipment Cabinets and to provide necessary utility service thereto. The current as-built construction drawings, including a complete and detailed inventory of all Equipment and improvements installed on the Tower and upon the Land, are attached hereto as Exhibit C and made part of this License by reference. The parties acknowledge that this License is non-exclusive and that the City will continue to use the Tower and shall have the right to lease or grant other licenses to one or more entities on the Tower, provided that any such subsequent use, lease, or license shall not interfere with the Licensee's rights under this License.

7. Acceptance of Premises. The Licensee has taken possession of the Premises pursuant to the 2002 License. The taking of possession of the Premises by the Licensee is conclusive evidence that the Licensee:

   a. accepts the Premises as suitable for the purposes for which it is licensed; and

   b. accepts the Premises and every part thereof in an as-is condition, with all defects, except for latent defects.

8. Administrative Fees.

   a. The Licensee shall pay to the City a one-time administrative fee of Two Thousand Five Hundred and no/100 Dollars ($2,500.00), the receipt of which is hereby acknowledged by the City, as payment of the City's costs of negotiating and processing this License.

b. The Licensee shall pay to the City an administrative fee of Two Thousand and no/100 Dollars ($2,000.00) for each subsequent amendment to this License, if any except for (i) an amendment requested by City or (ii) necessitated by City's actions.

9. License Fee.

a. The Licensee shall pay to the City a base annual fee ("Base Antenna Fee") of Thirty Thousand and no/100 Dollars ($30,000.00) for the right to install Equipment occupying up to one hundred (100) cubic feet of air space on the Tower and for the use of the Land. The Base Antenna Fee shall increase annually by three percent (3%) effective as of each anniversary of the Effective Date of this License.

b. The Licensee shall pay an annual "Additional Fee" of Twenty-five and no/100 Dollars ($25.00) per cubic foot of air space on the Tower occupied by the Equipment in addition to the 100 cubic feet of air space allowed in Paragraph 9.a. above, which Additional Fee shall be indexed at a rate of three percent (3%) annually, calculated retroactively for each full year since the Effective Date.

c. The Base Antenna Fee and Additional Fee are hereinafter collectively referred to as the "License Fee". The License Fee schedule is set forth in attached Exhibit D.

d. The first payment shall be due within forty-five (45) days of the execution of this License. Subsequent License Fee payments shall be due on or before the anniversary of the Effective Date of this License. All payments are to be made to the City Treasurer, referenced to Real Estate Project No. 7013, and sent or personally delivered to the City's Economic Development Division at the address specified in Paragraph 27.

e. In addition to the provisions of Paragraph 20, the City shall have the right, under this Paragraph, to send late payments of the License Fee to a collection agency and to the Wisconsin Department of Revenue pursuant to the State Debt Collection program under Wis. Stat. §71.935.

10. Interference.

The Licensee's installation, operation, and maintenance of the Equipment and Equipment Cabinets shall not damage or interfere in any way the City's Tower operations or related repair and maintenance activities or with such activities of other licensees. The Licensee agrees to cease all such actions which materially interfere with the City's use of the Tower immediately upon actual notice of such interference, provided however, in such case, the Licensee shall have the right to terminate the License. The City, at all times during this License, reserves the right to take any action it deems necessary, in its sole discretion to repair, maintain, alter or improve the Premises in connection with Tower operations as may be necessary, including licensing part of the Tower and/or the Land to others, subject to the terms of this License. Except in cases of emergency, the City will endeavor to provide the Licensee with written notice in advance of any scheduled repair, maintenance, alteration or improvement of the Premises. The Licensee agrees to reimburse the City for any additional repair, maintenance, alteration or improvement costs which the City incurs as a result of the Licensee's Equipment being located on the Tower. The City shall attempt to minimize, at no additional expense to the City, any disturbance to the Licensee's operations during such repairs, maintenance, alterations or improvements. Should the

City's activities interfere with the Licensee's operation, the City shall, if feasible, allow the Licensee to install temporary facilities, at its sole cost, on the Property until such activities are completed.

Before making any modifications to the existing Equipment, the Licensee shall provide to the City, at the Licensee's expense, an interference study indicating whether the Licensee's modifications will interfere with any existing communications facilities on the Tower and an engineering study indicating whether the Tower is able to structurally support the modifications to the Licensee's Equipment without prejudice to the City's primary use of the Tower.

The City does not guarantee to the Licensee subsequent noninterference with the Licensee's communications operations, provided, however, that in the event any other party except a governmental unit, office or agency requests a license and/or permission to place any type of additional antenna or transmission facility on the Premises, the following procedures shall govern to determine whether such antenna or transmission facility will interfere with the Licensee's transmission operations:

> If the City receives any such request, the City shall submit a proposal complete with all technical specifications reasonably requested by the Licensee to the Licensee for review for noninterference; however, the City shall not be required to provide the Licensee with any specifications or information claimed to be of a proprietary nature by the third party. The third party shall be responsible for the reasonable cost of preparing the technical specifications for its proposed transmission facility. The Licensee shall have thirty (30) days following receipt of said proposal to make any objections thereto, and failure to make any objection within said thirty (30) day period shall be deemed consent by the Licensee to the installation of antennas or transmission facilities pursuant to said proposal. If the Licensee gives notice of objection due to interference during such thirty (30) day period and the Licensee's objections are verified by the City to be valid, then the City shall not proceed with such proposal unless the City modifies the proposal in a manner determined, in the City's reasonable judgment, to adequately reduce the interference. In that case, the City may proceed with the proposal.

The Licensee's use and operation of its Equipment shall not interfere with the use and operation of other communication facilities on the Tower which pre-existed the Licensee's Equipment. If the Licensee's Equipment causes interference, the Licensee shall take all measures reasonably necessary to correct and eliminate the interference. If the interference cannot be eliminated within five (5) days after the Licensee has actual notice of this interference, the Licensee shall immediately cease operating its Equipment until the interference has been eliminated (except for periodic testing pursuant to FCC regulations and generally accepted industry standards). If the interference cannot be eliminated within thirty (30) days, the Licensee shall have the right to terminate this License. If the interference cannot be eliminated within one hundred twenty (120) days, the City may revoke this License. In the event of termination or revocation of the License under this Paragraph, any License Fee that has been prepaid for the period following the termination or revocation shall be prorated on a per diem basis and refunded to the Licensee.

11. <u>RF Emissions</u>.

a. The Licensee shall be responsible for ensuring that the Equipment does not cause radio frequency ("RF") emissions that are in excess of the safe limits established by the FCC ("RF Standards"). Before installing or making any modifications to the Equipment, the

Licensee shall survey the existing RF environment at the Property. By installing the Equipment, the Licensee shall be deemed to have represented to the City that the Equipment shall not itself violate, or, in conjunction with other RF sources located at the Property as of the Effective Date cause to be violated, the RF Standards. The Licensee shall provide the City with safety recommendations that address the protection of those who must be on the Property due to maintenance, repair, or other activities related to the operations carried out at the Property.

b. The Licensee shall cooperate with the City in reducing RF exposure to maintenance personnel by powering down the Equipment, as necessary, during periods of maintenance at the Property. The City shall provide the Licensee with as much advance notice of any such maintenance as is reasonably available.

12. Construction or Mechanics Liens.

a. The Licensee shall not suffer or permit any construction or mechanics' liens to be filed, or if filed, to remain uncontested, against the fee of the Premises, nor against the Licensee's interest in the Premises, by reason of work, labor services or materials supplied or claimed to have been supplied to the Licensee or anyone holding the Premises or any part thereof through or under the Licensee; and nothing contained herein shall be deemed or construed in any way as constituting the consent or request of the City, express or implied, by inference or otherwise, to any contractor, subcontractor, laborer or materialman for the performance of any labor or the furnishing of any materials for any specific improvement, alteration or repair of or to the Premises or any part thereof, nor as giving the Licensee any right, power or authority to contract for or permit the rendering of any services or the furnishing of any materials that would give rise to the filing of any mechanics' or construction liens against the fee of the Premises. If any such lien is filed, the Licensee shall immediately cause the same to be discharged or released or shall upon request provide adequate and acceptable security or bond to protect the City's interest.

b. If any such construction or mechanics' lien shall at any time be filed against the Premises, the Licensee covenants that it will promptly take and diligently prosecute appropriate action to have the same discharged by payment, bonding or otherwise, and that it will hold the City free and harmless of and from any and all liability to any contractor, subcontractor, materialman, laborer or any other person relating to or arising because of any improvements or alterations on or to the Premises, and that it will also defend on behalf of the City, at the Licensee's sole cost and expense, any action, suit or proceeding which may be brought for the enforcement of any such lien, and that it will pay any damages and discharge any judgments entered therein. Upon the Licensee's failure to do any of the foregoing things, the City may take such action as may be reasonably necessary to protect the City's interest, in addition to any other right or remedy which it may have; and any amount paid by the City in connection with such action shall be repaid by the Licensee to the City upon demand, together with interest thereon at the rate of twelve percent (12%) per annum.

13. Special Conditions.

a. The Licensee shall work to minimize the impact of any and all cable routes on the overall operation of and clearance spaces within the Tower. If the City finds Licensee's future

cables to be intruding into the City's work or access space, the Licensee shall reroute, resize or eliminate the interfering cable to the satisfaction of the City.

b. The Licensee shall limit the number of structural penetrations into the Tower to what is reasonably required for Licensee's use of the Premises. Licensee agrees not to make any unnecessary structural penetrations into the Tower. The City may review Licensee's proposed structural penetrations and provide feedback to Licensee. Licensee shall use good faith efforts to attempt to address the City's feedback regarding Licensee's proposed structural penetrations. The City may limit the use of existing structural penetrations and may limit the size and location of any proposed structural penetrations, as long as such limitations do not unreasonably interfere with Licensee's use of the Premises or Licensee's rights under this License. This penetration limit may require the Licensee to reroute or resize some cables to the extent reasonable and practicable for Licensee's use, in order to meet the needs of the City.

c. No exterior storage of material, equipment or vehicles is permitted on the Property, except the temporary and orderly placement of items in conjunction with maintenance, repair, replacement or removal activities.

d. The Licensee shall be responsible for maintaining the Equipment and Equipment Cabinets.

e. The Licensee shall have non-exclusive, unlimited access, 24 hours a day, 7 days a week, 365 days a year, to the Land.

f. Access to the Tower shall be provided to the Licensee at all times upon notice to the City. The Licensee shall arrange for access to the Tower by contacting the City's Water Works Operator at (608) 266-4665 a minimum of two (2) business days in advance of the Licensee's desired access date. In the event of an emergency, shorter advance notice to the Water Works Operator shall be permissible. At all times during which the Licensee has access to the Tower, the Licensee will take all reasonable steps to ensure that all enclosures, gates, ladders and any other access ways to the Tower are properly secured in order to prevent unauthorized access to the Tower. The Licensee shall be assessed a penalty of Two Thousand and no/100 Dollars ($2,000.00) for each instance of non-compliance with the requirements of this Subparagraph, payable within forty-five (45) days after Licensee's receipt of notice and invoice from the City; provided, however, that the City must provide the Licensee with written evidence that such violation is due to the acts of the Licensee, its employees, contractors, subcontractors, or agents; and, in the event that curing such violation requires the Licensee to access the Premises, the City shall grant the Licensee such access as soon as reasonably possible after providing notice of such violation.

g. At all times during which the Licensee has access to the Premises, the Licensee will take all reasonable steps to ensure that all enclosures, gates, ladders and any other access ways to the Premises are properly secured when not in use in order to prevent unauthorized access to the Premises. The Licensee shall be assessed a penalty of Two Thousand and no/100 Dollars ($2,000.00) for each instance of non-compliance with the requirements of this Subparagraph, payable within forty-five (45) days after Licensee's receipt of notice and invoice from the City; and, in the event that curing such violation requires the Licensee to access the Premises, the City shall grant the Licensee such access as soon as reasonably possible after providing notice of such violation.

h. The City shall not be liable for any damage to the Equipment, Equipment Cabinets or other site improvements.

i. Any modifications to the Equipment or Equipment Cabinets shall be subject to the written approval of the City and any other required governmental approvals before the Licensee may begin the modification of the Equipment and/or Equipment Cabinets. The Licensee shall complete and submit to the City the Equipment Modification Form attached as Exhibit E, together with all requisite studies and reports. The City shall have a minimum of thirty (30) days to review and comment on the Licensee's submission of the Equipment Modification Form. In the event a modification should result in a change to the License Fee calculation set forth in Exhibit D, the parties agree to enter into an amendment to this License for the purpose of updating Exhibit D. The adjustment to the License Fee shall be effective upon the date the City issues a consent letter allowing for the Equipment Modification, regardless of the actual date of installation on the Tower, and shall be prorated for any partial year. Notwithstanding any provision of this Subparagraph to the contrary, without obtaining the City's prior consent, the Licensee shall have the right to: (i) make additions, alterations or improvements to the Licensee's equipment housed within any Equipment Cabinet on the Premises; and (ii) replace any or all of its Equipment installed on or about the Tower with replacement equipment of the same kind, which is reinstalled in the same place and position and is of the same size and weight as the replaced Equipment.

j. In the event the City requires the expertise of a third party engineer/consultant to review the installation of the Licensee's Equipment and/or Equipment Cabinets, or any future modifications to the Licensee's Equipment and/or Equipment Cabinets, the Licensee shall be required to reimburse the City of Madison Water Utility ("MWU") for costs incurred by the MWU as a result of hiring said engineer/consultant. Such third party review shall include, but not be limited to, the following: the review of plans and specifications; review of structural, interference, and other reports; and on-site inspections and meetings. All fees and invoices must be paid within forty-five (45) days after the MWU sends the Licensee an invoice for the same together with reasonable supporting documentation evidencing such fees.

k. The Equipment shall remain the exclusive property of the Licensee.

l. The Licensee shall in no way encumber, or allow to be encumbered, the City's title to the Premises.

m. Within sixty (60) days following any modification to the Equipment or Equipment Cabinets, the Licensee shall provide the City with an as-built construction drawings showing the actual location of the Equipment and/or Equipment Cabinets installed on the Premises. Said drawings shall be accompanied by a complete and detailed inventory of all Equipment installed on the Tower and the Land.

n. The Licensee shall, at its own expense, keep and maintain the Premises in a presentable condition consistent with good business practice and in a manner consistent with the preservation and protection of the general appearance and value of other premises in the immediate vicinity. Maintenance responsibilities include, but shall not be limited to, any required paving, general repairs, removal of garbage and debris, snow removal, landscape

and upkeep. No exterior storage of materials, equipment or vehicles is permitted on the Premises, except the temporary and orderly placement of items in conjunction with maintenance, repair or construction activities.

o. The Licensee agrees to join and maintain membership in Diggers Hotline and secure and maintain the services of a competent locating service. That membership in Diggers Hotline and contracting of a locating service shall be continuous and uninterrupted throughout the term of this License.

14. Destruction of Premises. If the Tower is damaged or destroyed by fire, winds, flood, lightning or other natural or manmade cause, the City shall have the option to repair or replace the Tower at its sole expense or to revoke the License effective on the date of such damage or destruction. In the event the City revokes the License, the Licensee may install, at its sole expense, temporary facilities to allow the continuation of its telecommunications operations for a period not to exceed one (1) year, unless otherwise agreed to by the City and the Licensee. If the City elects to repair or replace the Tower, the annual License Fee shall be abated until such repair or replacement is completed and any prepaid License Fee for such abatement period shall be a credit against the License Fee for the following year. During the abatement period the Licensee may install, at its sole expense, temporary facilities to allow the continuation of its telecommunication operations. Said temporary facilities shall not interfere with the City's repair or replacement activities. If the City undertakes such repair or replacement but cannot complete the same within a reasonable period of time, which shall not be less than sixty (60) days and not greater than two hundred seventy (270) days, after the damage or destruction occurred, the Licensee may terminate the License upon written notice to the City, effective as of the date that the damage or destruction occurred. In such event, the Licensee shall have no further obligations under this License (except any obligations that by their nature or by their language survive termination). In the event of revocation or termination of the License under this Paragraph, any License Fee that has been prepaid for the period following the revocation or termination shall be prorated on a per diem basis and refunded to the Licensee. The restoration of City services shall be given the highest priority in the event that any of the City's services and the Licensee's telecommunication services are interrupted at the same time, unless otherwise agreed to by the City and the Licensee at the time of restoration.

15. Taxes.

a. Real Estate Taxes. The City is a tax-exempt entity. Should any City of Madison Ordinance or State of Wisconsin Statute require that the Property be subject to real estate taxes or assessments, the Licensee shall be liable for the Licensee's proportionate share of all such real estate taxes and assessments on a pro rata square foot basis as the area of the Premises bears in relation to the Property with respect to the Land and for all taxes imposed on the full value of the Licensee's improvements, if any, constructed on the Land.

b. Personal Property Taxes. The Licensee shall pay, before delinquency, all municipal, county and state or federal taxes assessed against any interest of the Licensee in the Premises or assessed against the Equipment and Equipment Cabinets.

16. Utilities. The Licensee shall be responsible for arranging for the installation of all utility services to the Premises for the Licensee's use and shall be responsible for payment of such utility services.

17. Indemnification. The Licensee shall be liable to and agrees to indemnify, defend and hold harmless the City, and its officers, officials, agents, and employees, against all loss or expense (including liability costs and attorney's fees) by reason of any claim or suit, or of liability imposed by law upon the City or its officers, officials, agents or employees for damages because of bodily injury, including death at any time resulting therefrom, sustained by any person or persons or on account of damages to property, including loss of use thereof arising from, in connection with, caused by or resulting from the acts or omissions of the Licensee and/or its officers, officials, agents, employees, assigns, guests, invitees, or subcontractors, in the performance of this License, whether caused by or contributed to by the negligent acts of the City, its officers, officials, agents, or employees. This Paragraph shall survive termination and assignment or transfer of this License.

18. Insurance. The Licensee shall carry commercial general liability insurance,as per form ISO CG 00 01 or equivalent covering as insured the Licensee and naming the City, its officers, officials, agents and employees as additional insureds by endorsement with respect to this agreement, with a minimum limit of $1,000,000 per occurrence. This policy shall also include contractual liability coverage in the same amount, apply on a primary and noncontributory basis, and Licensee shall provide the City thirty (30) days advance written notice of cancellation or non-renewal of the policy unless replaced, or material changes to the policy during the term of this License. As evidence of this coverage, the Licensee shall furnish the City with a certificate of insurance on a form approved by the City, and if requested by the City Risk Manager, the Licensee shall also provide copies of additional insured endorsements or policy. If the coverage required above expires while this License is in effect, the Licensee shall provide a renewal certificate to the City for approval.

19. Assignment and Sublicensing. The Licensee shall not assign, lease, sublease, or in any way transfer this License or sublicense the Premises, or any portion thereof, or otherwise allow a third party to use the Premises, without the prior written consent of the City. Said consent may be withheld at the sole discretion of the City. Notwithstanding the foregoing, the Licensee shall be permitted to assign this License to any entity which controls, is controlled by, or is under the common control of the Licensee, or to any entity resulting from any merger or consolidation with the Licensee, or to any partner of the Licensee, or to any partnership in which the Licensee is a general partner, or to any person or entity which acquires all of the assets of the Licensee as a going concern. Before an assignment shall be effective, any assignee of this Licensee shall assume in writing all of the obligations of the Licensee under the terms and conditions of this License. The Licensee shall promptly provide to the City documentation of any assignment of this License.

20. Revocation and Termination.

a. The City shall have the right, at its sole option, to declare this License void, revoke the same, reenter and take possession of the Premises under the following conditions:

(1) By giving the Licensee thirty (30) days written notice, upon or after any one of the following events:

i. The failure of the Licensee to make any payment due under this License at any time following the filing by the Licensee of a voluntary petition in bankruptcy.

ii. The institution of proceedings in bankruptcy against the Licensee and the adjudication of the Licensee as bankrupt pursuant to such proceedings.

iii. The taking by a court of competent jurisdiction of the Licensee's assets pursuant to proceedings brought under the provisions of any federal or state reorganization act.

iv. The appointment of a receiver of the Licensee's assets.

v. The divestiture of the Licensee's interest herein by other operation of law, except as permitted in Paragraph 19.

vi. The abandonment by the Licensee of the Premises.

vii. The use of the Premises by Licensee for an illegal purpose.

viii. In the event the Licensee fails to eliminate interference or to cease its operations as required by Paragraph 10.

In the event of revocation under this Subparagraph, any License Fee that has been prepaid shall be retained by the City as liquidated damages.

(2) In the event that the Licensee shall fail to maintain insurance as required by this License, the City may elect to: (a) immediately revoke this License and cause the removal of all Equipment installed upon the Premises at the sole expense of the Licensee; or (b) purchase or pay for any insurance coverage required by this License and charge the Licensee the cost of same as an Additional Fee. In the event of revocation under this Subparagraph, any License Fee that has been prepaid shall be retained by the City as liquidated damages.

(3) By giving the Licensee thirty (30) days written notice specifying the nature of the default in the event the Licensee defaults in the performance of any term or condition of this License other than those as set forth in Subparagraphs 20.a.(1) and 20.a.(2). Notwithstanding the foregoing, if such default is not a health or safety violation and cannot, because of the nature of the default, be cured within said thirty (30) days, then the Licensee shall be deemed to be complying with such notice if, promptly upon receipt of such notice, the Licensee immediately takes steps to cure the default as soon as reasonably possible and proceeds thereafter continuously with due diligence to cure the default within a period of time which, under all prevailing circumstances, shall be reasonable. In the event of revocation under this Subparagraph, any prepaid License Fee shall be prorated on a per diem basis and refunded to the Licensee.

(4) Effective at any time following the expiration of the initial five (5)-year term, by giving the Licensee a minimum of one (1) year's prior written notice of revocation in the event the Premises, in the sole discretion of the governing body of the City, are desired for any public purpose or use, which use shall exclude the Licensee's permitted use under this License and any similar private use by any additional telecommunications provider. Any License Fee that has been prepaid for the period following the date the Equipment is relocated shall be prorated on a per diem basis

and refunded to the Licensee. In the event of revocation under this Subparagraph, the City shall use its best efforts to provide the Licensee with a satisfactory alternate location on City-owned property which would allow for comparable telecommunications coverage.

b. Failure of the City to declare this License revoked upon the breach or default of the Licensee for any reason set forth in Subparagraphs 20.a.(1), 20.a.(2) or 20.a.(3) shall not operate to bar or destroy any right of the City to revoke this License for any subsequent breach or default of any term or condition of this License.

c. The Licensee shall have the right to terminate this License at any time during the initial term of this License or any renewal terms by giving the City a minimum of one (1) year's written notice of termination. In the event of termination under this Subparagraph, the date of termination must coincide with the anniversary of the Effective Date.

21. Rights Upon Expiration, Revocation or Termination. Upon the expiration, revocation or termination of this License for any cause, the Licensee's rights in the Premises and its obligations hereunder (except any obligations that by their nature or by their language survive termination) shall cease, and the Licensee shall immediately surrender the Premises, subject to the provisions of Paragraph 24.

22. Compliance. The Licensee shall observe and promptly and effectively comply with all applicable statutes, rules, orders, ordinances, requirements and regulations of the City, the County of Dane, the State of Wisconsin, the federal government and any other governmental authority having jurisdiction over the Premises. The Licensee may, if in good faith and on reasonable grounds, dispute the validity of any charge, complaint or action taken pursuant to or under color of any statute, rule, order, ordinance, requirement or regulation, defend against the same, and in good faith diligently conduct any necessary proceedings to prevent and avoid any adverse consequence of the same. The Licensee agrees that any such contest shall be prosecuted to a final conclusion as soon as possible and that it will hold the City harmless with respect to any actions taken by any lawful governmental authority with respect thereto.

23. Hazardous Substance Indemnification. The Licensee represents and warrants that its use of the Premises herein will not generate any hazardous substance, and it will not store or dispose on the Premises nor transport to or over the Premises any hazardous substance in violation of any applicable federal, state or local law, regulation or rule. The Licensee further agrees to hold the City harmless from and indemnify the City against any release of such hazardous substance and any damage, loss, or expense or liability resulting from such release including all attorneys' fees, costs and penalties incurred as a result thereof, which was caused by the Licensee or any of its employees or agents. "Hazardous substance" shall be interpreted broadly to mean any substance or material defined or designated as hazardous or toxic waste, hazardous or toxic material, hazardous or toxic radioactive substance, or other similar term by any federal, state or local environmental law, regulation or rule presently in effect or promulgated in the future, as such laws, regulations or rules may be amended from time to time; and it shall be interpreted to include, but not be limited to, any substance which after release into the environment will or may reasonably be anticipated to cause sickness, death or disease or damage to or loss of use of real or personal property. This paragraph shall survive termination and assignment or transfer of this License.

24. Removal and Disposal of Personal Property. Upon the expiration, revocation or termination of this License, the Licensee, at the Licensee's sole cost, shall remove from the Premises all Equipment installed by the Licensee. The Licensee shall also repair any damages it causes to the Land and Tower to a condition equivalent to that which existed prior to the date that the Licensee first occupied the Land and Tower, except any loss incurred under Paragraph 14. Removal of Equipment and repair of the Land and Tower shall be accomplished within sixty (60) days of expiration, revocation or termination of this License, except as may be adjusted by the City to allow for winter conditions. The expiration or termination of this License shall not become effective until removal and repair have been accomplished to the satisfaction of the City, however, during such removal and repair period the Licensee's right to use the Premises shall be limited to removal and repair activities. In the event the Licensee fails to accomplish said removal and repair, the City may cause the removal and repair to be accomplished at the Licensee's expense and with no liability or cost to the City. The City may waive or alter this removal and repair requirement if, at its sole discretion, it so chooses. Any such waiver or alteration shall not reduce the time allowed for the removal or repair activities or place conditions on the Licensee which are greater than those provided in this Paragraph. To ensure compliance under this Paragraph, the Licensee shall keep in effect throughout the term of this License a surety bond in the amount of $10,000 with performance payment and maintenance clauses payable to the City.

25. Premises Required By Eminent Domain.

In the event the Premises or any part thereof shall be needed either permanently or temporarily for any public or quasi-public use or purpose by any authority in appropriation proceedings or by any right of eminent domain, the entire compensation award therefor, including, but not limited to, all damages and compensation for diminution of value of this License, and the reversion and fee interests, shall belong to the City without any deduction therefrom for any present or future estate of the Licensee, and the Licensee hereby assigns to the City all of its right, title and interest to any such award. However, the Licensee shall have the right to recover from the condemning authority such compensation as may be separately awarded to the Licensee on account of interruption of the Licensee's business and for moving and relocation expenses.

In the event the whole of the Premises or any part thereof shall be taken or condemned so that the balance cannot be used for the same purpose and with substantially the same utility to the Licensee as immediately prior to such taking, this License shall terminate upon delivery of possession to the condemning authority and any License Fee that has been prepaid for the period following the termination shall be prorated on a per diem basis and refunded to the Licensee unless the Licensee will receive compensation for any prepaid License Fee from the condemning authority.

In the event of a taking of any portion of the Premises not resulting in a termination of this License, the City shall use so much of the proceeds of the City's award for the Premises as is required therefor to restore the Premises to a complete architectural unit, and this License shall continue in effect with respect to the balance of the Premises, with a reduction of the License Fee in proportion to the portion of the Premises taken.

26. Right of Entry. The City or its representatives shall have the right to enter upon the Premises (but shall not have access to the Equipment or the Equipment Cabinets without prior notice to the Licensee or without allowing the Licensee to have its representative accompany the City) at any reasonable time for the following purposes:

a. To make any inspection it may deem expedient to the proper enforcement of any term or condition of this License or in the exercise of its police powers.

b. For the purpose of performing work related to any public improvement, provided that the City restore the Premises to a condition equivalent to that which existed on the date the City initiated the installation of the public improvement. The Licensee agrees to hold the City harmless for any loss of access to the Premises by the Licensee which may occur during the period of installation of the public improvement.

27. Notices. All notices to be given under the terms of this License shall be signed by the person sending the same, and shall be sent by certified mail, return receipt requested and postage prepaid, or by a nationally recognized overnight courier, to be effective when properly sent and received, refused or returned undeliverable, to the address of the parties specified below. If electing to use electronic mail, said emails shall be sent to the email addresses provided below with an active read receipt and shall include a statement that the electronic mail constitutes notice under the terms of this License.

For the City:	City of Madison Economic Development Division Office of Real Estate Services 215 Martin Luther King Jr. Boulevard P.O. Box 2983 Madison, WI 53701-2983 ores@cityofmadison.com lvest@cityofmadison.com
For the Licensee:	New Cingular Wireless PCS, LLC Attn: TAG – LA Cell Site #: Prairie Road WT (WI) Cell Site Name: WI2022 Fixed Asset #: 10080264 1025 Lenox Park Blvd. NE 3rd Floor Atlanta, GA 30319
With a courtesy copy to: (which shall not constitute notice)	New Cingular Wireless PCS, LLC Attn: Legal Department – Network Counsel Cell Site #: Prairie Road WT (WI) Cell Site Name: WI2022 Fixed Asset #: 10080264 208 S. Akard Street Dallas, TX 75202-4206

Any party hereto may, by giving ten (10) business days written notice to the other party in the manner herein stated, designate any other address in substitution of the address shown above to which notices shall be given.

28. Definition of City and Licensee. The terms "City" and "Licensee" when used herein shall mean either singular or plural, as the case may be, and the provisions of this License shall bind the parties mutually, their heirs, personal representatives, successors and assigns.

29. Signs. Any signs on the Premises shall be in conformity with the provisions of Chapter 31, Street Graphics Control, Madison General Ordinances. Signage for advertising purposes shall not be permitted.

30. Severability. If any term or provision of this License or the application thereof to the City or the Licensee or circumstances shall, to any extent, be invalid or unenforceable, the remainder of this License, or the application of such terms or provisions to the City or the Licensee or circumstances other than those as to which it is held invalid or unenforceable, shall not be affected thereby, and each term and provision of the License shall be valid and be enforceable to the fullest extent permitted by law.

31. Non-Discrimination. In the performance of the services under this License, the Licensee agrees not to discriminate because of race, religion, marital status, age, color, sex, disability, national origin or ancestry, income level or source of income, arrest record or conviction record, less than honorable discharge, physical appearance, sexual orientation, gender identity, political beliefs or student status. The Licensee further agrees not to discriminate against any contractor, subcontractor or person who offers to contract or subcontract for services under this License because of race, religion, color, age, disability, sex, sexual orientation, gender identity or national origin.

32. Accessibility. The Premises shall conform where applicable to the accessibility provisions of the Wisconsin Administrative Code, Madison General Ordinance 39.05, the Federal Fair Housing Act as amended, and the Americans with Disabilities Act, regarding accessibility for the use of the Premises by the Licensee's employees, with all costs of compliance to be paid by the Licensee.

33. Subordination.

    a. This License is subordinate to rights and privileges granted by the City to public and private utilities across, over or under the Premises.

    b. The Licensee shall subordinate its rights in this License, without compensation, at the request of the City to provide easements and rights-of-way for all public and private utilities across or along the Premises, provided that neither such subordination nor such easements shall interfere, except temporarily during construction or temporarily pursuant to rights which accrue to such easements or rights-of-way, with the use of the Premises by the Licensee under the terms of this License.

34. No Waiver. No failure to exercise, and no delay in exercising, any right, power or remedy hereunder on the part of the City or the Licensee shall operate as a waiver thereof, nor shall any single or partial exercise of any right, power or remedy preclude any other or further exercise thereof or the exercise of any other right, power or remedy. No express waiver shall affect any event or default other than the event or default specified in such waiver, and any such waiver, to be effective, must be in writing and shall be operative only for the time and to the extent expressly provided by the City or the Licensee therein. A waiver of any covenant, term or

condition contained herein shall not be construed as a waiver of any subsequent breach of the same covenant, term or condition.

35. Authorized Agent. The Director of the City's Economic Development Division or the Director's designee is hereby designated as the official representative of the City for the enforcement of all provisions of this License, with authority to administer this License lawfully on behalf of the City.

36. Entire Agreement. All terms and conditions with respect to this License are expressly contained herein, and this License supersedes any and all oral contracts and negotiations between the parties.

37. Amendment. No alteration, amendment, change, or addition to this License shall be binding upon the parties unless in writing and signed by them.

38. Conflict of Interest.

    a. The Licensee warrants that it and its agents and employees have no public or private interest, and will not acquire directly or indirectly any such interest, which would conflict in any manner with the performance of the services under this License.

    b. The Licensee shall not employ or contract with any person currently employed by the City for any services included under the provisions of this License.

39. Law Applied. This License shall be governed by and construed, interpreted and enforced in accordance with the laws of the State of Wisconsin and Wisconsin Courts.

40. Third Party Rights. This License is intended to be solely between the parties hereto. No part of this License shall be construed to add, supplement, amend, abridge or repeal existing rights, benefits or privileges of any third party or parties, including but not limited to employees of either of the parties.

41. Goodwill. Any and all goodwill arising out of this License inures solely to the benefit of the City; the Licensee waives all claims to benefit of such goodwill.

42. Quiet Enjoyment. Pursuant to this License and subject to the rights and privileges retained by the City and granted to other licensees, the City hereby covenants and agrees that if the Licensee shall perform all of the covenants and agreements herein to be performed on the Licensee's part, the Licensee shall, at all times during the continuance hereof, have the peaceable and quiet enjoyment and possession of the Premises without any manner of hindrance from the City or any person lawfully claiming the Premises.

43. Public Record. This License will be recorded by the City at the office of the Dane County Register of Deeds after it is executed by the parties.

44. Counterparts, Electronic Signature and Delivery. This Contract may be signed in counterparts, each of which shall be taken together as a whole to comprise a single document. Signatures on this License may be exchanged between the parties by facsimile, electronic scanned copy (.pdf) or similar technology and shall be as valid as original; and this License may be converted into electronic format and signed or given effect with one or more electronic signature(s) if the

electronic signature(s) meets all requirements of Wis. Stat. ch. 137 or other applicable Wisconsin or Federal law. Executed copies or counterparts of this License may be delivered by facsimile or email and upon receipt will be deemed original and binding upon the parties hereto, whether or not a hard copy is also delivered. Copies of this License, fully executed, shall be as valid as an original.

[Signatures on following two pages]

IN WITNESS WHEREOF, the parties have entered into this License as of the date first set forth above.

New Cingular Wireless PCS, LLC,
a Delaware limited liability company

By: AT&T Mobility Corporation
Its: Manager

By: _____
(signature)

_____
(print or type name)

_____
(print or type title)

State of _____)
)ss.
County of _____)

Personally came before me this _____day of _____, 2022, _____ (name), _____ (title), of AT&T Mobility Corporation, Manager of the above named New Cingular Wireless PCS, LLC, a Delaware limited liability company, known to be the person who executed the above foregoing instrument and _____ (title) of said limited liability company, and acknowledged that he/she executed the foregoing instrument as such _____ (title) as the deed of said limited liability company by its authority.

_____
Notary Public, State of _____

_____
(Print or Type Name)
My Commission expires:_____

CITY OF MADISON,
A Wisconsin municipal corporation

By: _____
Satya Rhodes-Conway, Mayor

By: _____
Maribeth Witzel-Behl, City Clerk

AUTHENTICATION
The signatures of Satya Rhodes-Conway, Mayor, and Maribeth Witzel-Behl, Clerk, on behalf of the City of Madison, are authenticated on this _____ day of _____, 2022.

_____
Kevin Ramakrishna, Assistant City Attorney
Member of the Wisconsin Bar

Approved	**Date**	**Approved**	**Date**
_____	_____	_____	_____
David Schmiedicke, Finance Director		Eric Veum, Risk Manager	

Approved as to Form	**Date**
_____	_____
Michael Haas, City Attorney	

Execution of this License by the City of Madison is authorized by Resolution Enactment No. _____, File ID No. _____, adopted by the Common Council of the City of Madison on _____, 2022.

Drafted by the City of Madison Office of Real Estate Services Project No. 7013

EXHIBIT A

Legal Description

The Property:

Lot 1078, Hill View Addition to Meadowood, City of Madison, Dane County, Wisconsin.

EXHIBIT B (Sheet 1 of 2)

I:\CRYSTAL LAKE\MADUD\101062-PRAIRIERD ET\CADD-SURVEY\DRAWINGS\DWGS\101062-TOPO-C3D.DWG C-2
Plotted: 6/17/2011 7:04 AM By: 007SLE
Copyright © 2011, By Baxter & Woodman, Inc.
State of Wisconsin - Professional Design Firm
License No. - 484-001 - Expires 1-31-12

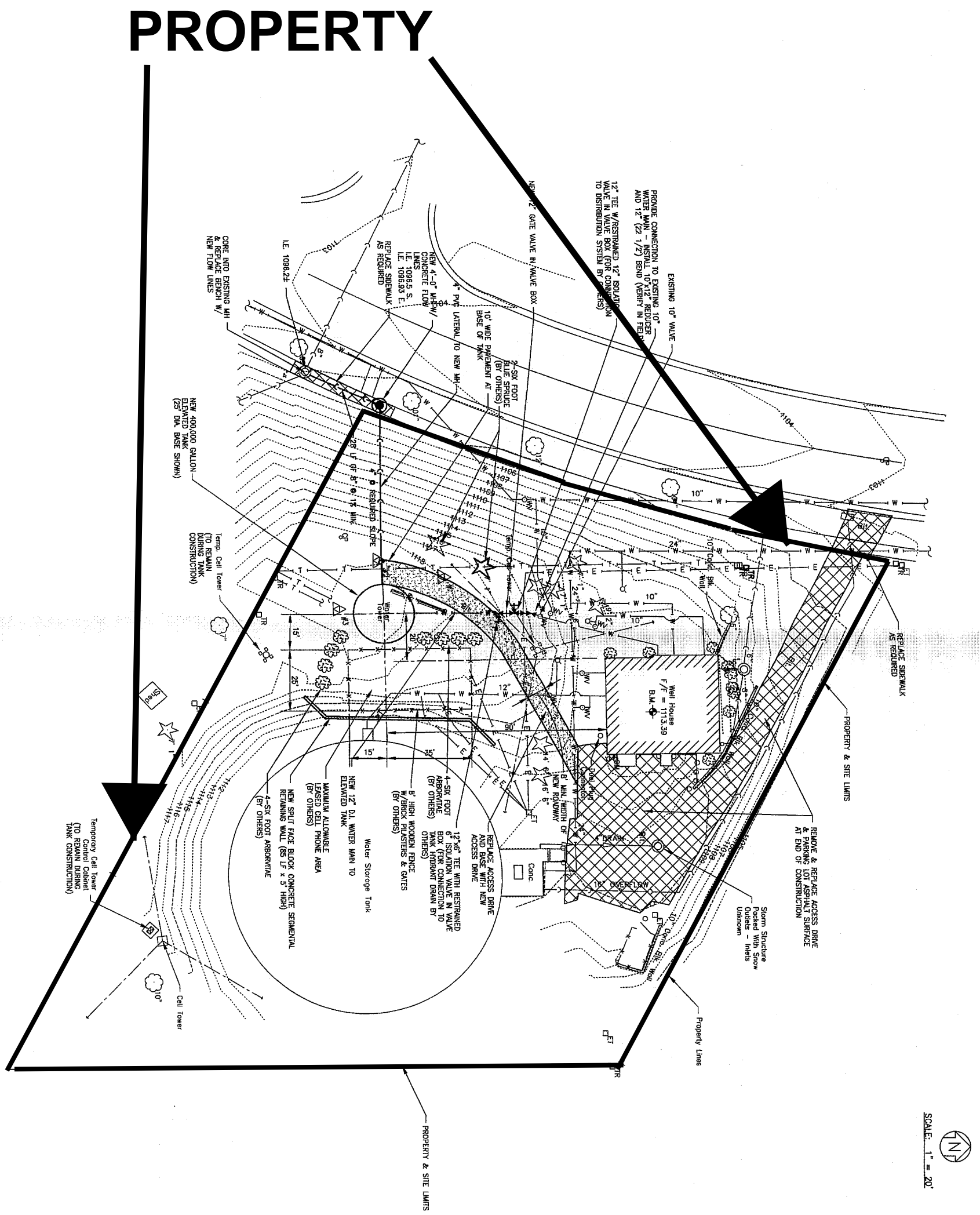

BAXTER WOODMAN
Consulting Engineers

CONSULTANTS

REVISIONS		
NO.	DATE	DESCRIPTION

* - REFER TO EQUIPMENT MANUFACTURER'S SHOP DRAWING

1" .5" 0 1" 2" 3"

PLAN SHEET DESIGNATION
COVER
G - GENERAL
H - HEATING & VENTILATING
C - CIVIL
L - LANDSCAPE
S - STRUCTURAL
A - ARCHITECTURAL
I - INSTRUMENTATION
Q - EQUIPMENT
F - FIRE PROTECTION
P - PLUMBING
M - MECHANICAL
E - ELECTRICAL
T - TELECOMMUNICATIONS
OP - OPERATIONS

PROJECT NO: 101062-40
SCALE: AS NOTED
DRAWING DATE: 3-14-11
DESIGNED BY: GDG
DRAWN BY: DEK
CHECKED BY: GDG
CLIENT

MADISON WATER UTILITY
MADISON, WISCONSIN
400,000 GALLON
PRAIRIE ROAD
WATER STORAGE TANK

SHEET TITLE
SITE PLAN

C-2

Viewers are advised to ignore the illegible text on this map. It is presented to show spatial relationships only.

Authorized by: Lance Vest, City of Madison Real Estate Specialist Lance Vest

EXHIBIT B (Sheet 2 of 2)

ABBREVIATIONS

AFF	ABOVE FINISHED FLOOR
AGL	ABOVE GRADE LEVEL
AMSL	ABOVE MEAN SEA LEVEL
APPROX	APPROXIMATE
ATS	AUTOMATIC TRANSFER SWITCH
AWG	AMERICAN WIRE GAUGE
BLDG	BUILDING
BTS	BASE TRANSMISSION STATION
℄	CENTERLINE
CLR	CLEAR
COL	COLUMN
CONC	CONCRETE
CND	CONDUIT
DWG	DRAWING
FT	FOOT(FEET)
EGB	EQUIPMENT GROUND BAR
ELEC	ELECTRICAL
EMT	ELECTRICAL METALLIC TUBING
ELEV	ELEVATION
EQUIP	EQUIPMENT
(E)	EXISTING
EXT	EXTERIOR
FND	FOUNDATION
F	FIBER
FIF	FACILITY INTERFACE FRAME
GA	GAUGE
GALV	GALVANIZED
GPS	GLOBAL POSITIONING SYSTEM
GND	GROUND
GSM	GLOBAL SYSTEM FOR MOBILE COMMUNICATION
LTE	LONG TERM EVOLUTION
MAX	MAXIMUM
MCPA	MULTI-CARRIER POWER AMPLIFIER
MFR	MANUFACTURER
MGB	MASTER GROUND BAR
MIN	MINIMUM
MTS	MANUAL TRANSFER SWITCH
N.T.S.	NOT TO SCALE
O.C.	ON CENTER
OE/OT	OVERHEAD ELECTRIC/TELCO
PPC	POWER PROTECTION CABINET
PL	PROPERY LINE
RBS	RADIO BASED STATION
RET	REMOTE ELECTRIC TILT
RRU	REMOTE RADIO UNIT
RGS	RIGID GALVANIZED STEEL
IN	INCH(ES)
INT	INTERIOR
LB(S), #	POUND(S)
SF	SQUARE FOOT
STL	STEEL
TMA	TOWER MOUNTED AMPLIFIER
TYP	TYPICAL
UE/UT	UNDERGROUND ELECTRIC/TELCO
UNO	UNLESS NOTED OTHERWISE
UMTS	UNIVERSAL MOBILE TELE-COMMUNICATION SYSTEM
VIF	VERIFY IN FIELD
W/	WITH
XFMR	TRANSFORMER

SYMBOLS

#	REVISION
	WORK POINT
	UTILITY POLE
	COMPRESSED STONE
	BRICK
	GRAVEL
	CONCRETE
	MASONRY
	EARTH
	STEEL
	CENTERLINE
	PROPERTY LINE
	LEASE LINE
	EASEMENT LINE
	CHAIN LINK FENCE
	WOOD FENCE
UE	BELOW GRADE ELECTRIC
UT	BELOW GRADE TELEPHONE
OE/OT	OVERHEAD ELECTRIC/TELEPHONE
A S-1	SECTION REFERENCE

FULLERTON ENGINEERING·DESIGN
1100 E. WOODFIELD ROAD, SUITE 500
SCHAUMBURG, ILLINOIS 60173
TEL: 847-908-8400
COA# 3620-11
www.FullertonEngineering.com

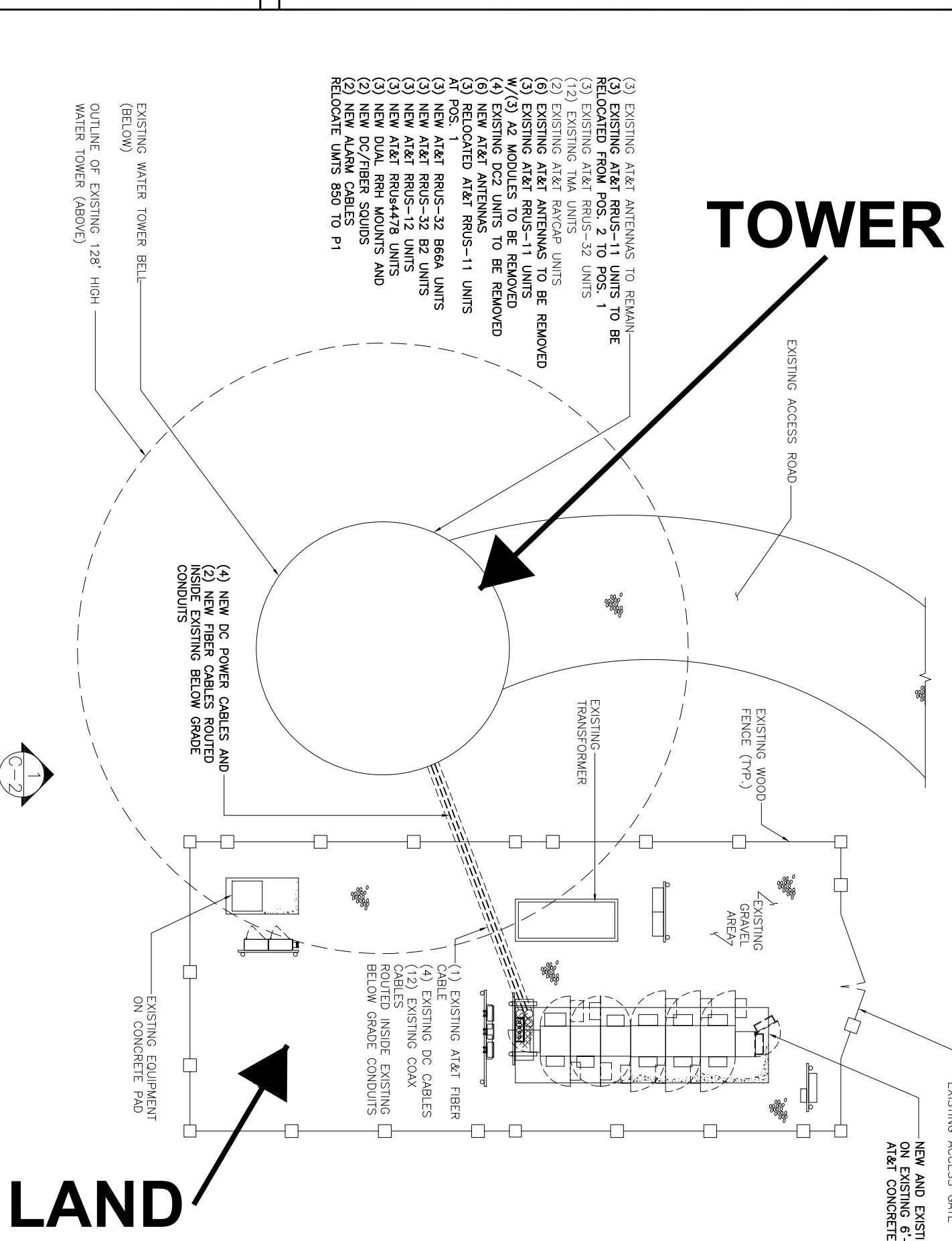

SITE PLAN

NOTE:
EXISTING EQUIPMENT TO BE UPGRADED AS NEEDED TO SUPPORT NEW 4C/5C/6C EQUIPMENT INSTALLATION

SOC WIRELESS
540 W. MADISON ST.
17TH FLOOR
CHICAGO, IL 60661

AT&T
930 NATIONAL PARKWAY
4th FLOOR
SCHAUMBURG, IL 60173

WI2022
10080264
PRAIRIE ROAD WT
2829 PRAIRIE ROAD
MADISON, WI 53719

#	DATE	REVISION	BY	CHK.
0	11/16/17	FINAL	LA	HA
B	10/18/17	100% REVIEW	LA	HA
A	10/9/17	90% REVIEW	LA	HA

SCALE: AS SHOWN
APP'D BY: DS

0 2' 4' 8' 16'
SCALE: 3/32" = 1'-0"

WISCONSIN DANIEL W. SMITH 44096-6 SCHAUMBURG, IL PROFESSIONAL ENGINEER

1 SITE PHOTO 2
DRAWING NAME

3 DRAWING NO.

SITE PLAN

C-1

PROJECT# 2017.0279.0063

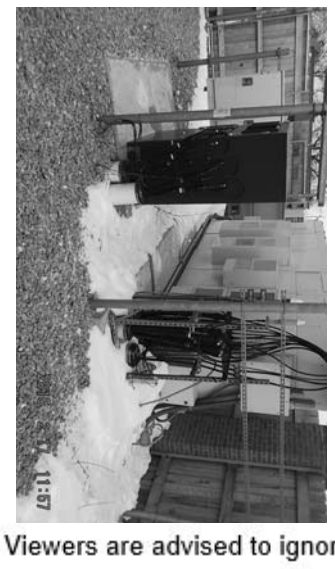

SITE PHOTO 2

SITE PHOTO 1

Viewers are advised to ignore the illegible text on this map. It is presented to show spatial relationships only.

Authorized by: Lance Vest, City of Madison Real Estate Specialist Lance Vest

EXHIBIT C (Sheet 1 of 10)

SITE PHOTO

REFERENCE MATERIALS

- THESE DRAWINGS ARE BASED ON AT&T SCOPING DOCUMENT DATED 10/2/2017

AT&T

AT&T PROJECT:	4C5C6C FNET& PCS RRU SWAP
AT&T SITE #:	WI2022
AT&T SITE NAME:	PRAIRIE ROAD WT
FA #:	10080264
PTN:	3351A0CSLG/3351A0CLNV/3351A0CLZ1/3351A0CV30
PACE #:	MRCHI029214/MRCHI029262/MRCHI028949/MRCHI028903
JURISDICTION:	DANE COUNTY
SITE ADDRESS:	2829 PRAIRIE ROAD MADISON, WI 53719

PROJECT INFORMATION

AT&T SITE NAME:	PRAIRIE ROAD WT
AT&T SITE NUMBER:	WI2022
SITE ADDRESS:	2829 PRAIRIE ROAD MADISON, WI 53719
SITE COORDINATES:	
LATITUDE:	43.020828°
LONGITUDE:	−89.488294°
GROUND ELEV.:	1119 FT
JURISDICTION:	DANE COUNTY
COUNTY:	DANE
FA NUMBER:	10080264
PTN NUMBER:	3351A0CSLG/3351A0CLNV/3351A0CLZ1/3351A0CV30
PACE NUMBER:	MRCHI029214/MRCHI029262/MRCHI028949/MRCHI028903
USID:	39502
APPLICANT:	AT&T WIRELESS 930 NATIONAL PARKWAY SCHAUMBURG, IL 60173
AT&T PM:	DONCO KOCESKI DK1012@att.com
AT&T CM:	MICHAEL W. DECET
SITE OWNER:	CITY OF MADISON

SCOPE OF WORK

THE SCOPE OF WORK CONSISTS OF MODIFYING THE EXISTING WIRELESS INSTALLATION:

- DECOMMISSION AND RETAIN GSM AND UMTS 1900
- REPLACE (3) EXISTING ANTENNAS AT POS. 1 WITH (3) NEW COMMSCOPE SBJAH4−1D65B−DL ANTENNAS (TYP. 1 PER SECTOR)
- REPLACE (3) EXISTING ANTENNAS AT POS. 4 WITH (3) NEW COMMSCOPE NNH4−65B−R6 ANTENNAS (RTP. 1 PER SECTOR)
- RELOCATE (3) EXISTING RRUS−11 UNITS FROM POS. 2 TO POS. 1 (TYP. 1 PER SECTOR), INSTALL (3) RRUS12 (TYP. 1 PER SECTOR) IN P2
- REMOVE (3) EXISTING RRUS−11 UNITS W/(3) A2 MODULES (TYP. 1 PER SECTOR)
- REMOVE (4) EXISTING DC2 RAYCAP UNITS
- INSTALL (3) NEW RRUS−32 B66A UNITS (TYP. 1 PER SECTOR)
- INSTALL (3) NEW RRUS−32 B2 UNITS (TYP. 1 PER SECTOR)
- INSTALL (3) NEW RRUs4478 UNITS (TYP. 1 PER SECTOR)
- INSTALL (3) NEW DUAL RRU MOUNTS (TYP. 1 PER SECTOR)
- INSTALL (2) NEW FIBER CABLES AND (4) NEW DC POWER CABLES
- INSTALL (2) NEW POWER/FIBER SQUIDS DC6−48−60−18−8C
- INSTALL (6) NEW 30A BREAKERS AND (7) NEW 25A BREAKERS WITH SAC LOWER FIBER
- INSTALL (2) RECTIFIERS. RELOCATE UMTS 850 TO P1
- (1) 6601 RBS, SWAP DUS FOR 5216. ADD (1) XMU
- INSTALL (2) ALARM CABLES IN ALPHA AND GAMMA

DRAWING INDEX

T−1	TITLE SHEET
SP−1	NOTES AND SPECIFICATIONS
C−1	SITE PLAN
C−2	ELEVATIONS
C−3	ANTENNA PLAN
C−4	EQUIPMENT DETAILS
C−4A	EQUIPMENT DETAILS AND NOTES
C−5	EQUIPMENT DESCRIPTION TABLE
E−1	UTILITY PLAN AND NOTES
E−2	GROUNDING DETAILS AND NOTES

DRAWING SCALES ARE FOR 11"X17" SHEETS UNLESS OTHERWISE NOTED

VICINITY MAP

LOCAL MAP

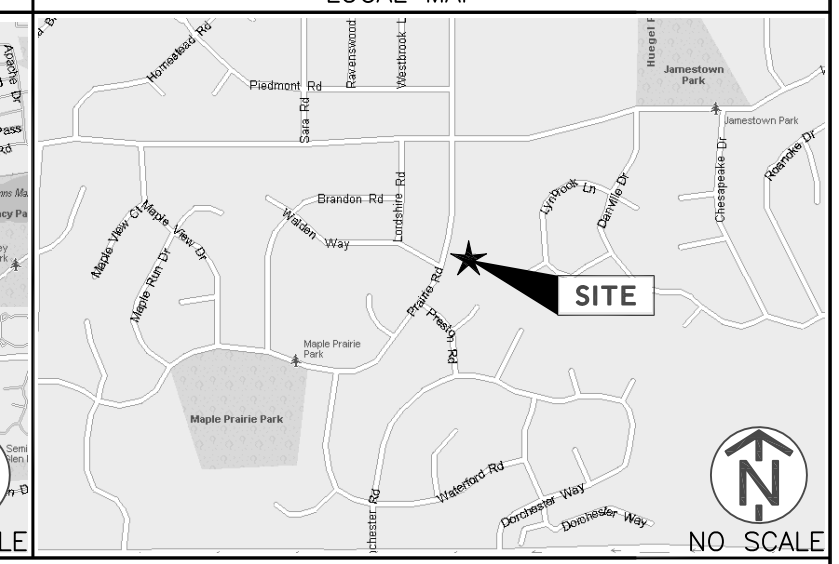

DIRECTIONS

DIRECTIONS FROM MILWAUKEE GENERAL MITCHELL AIRPORT:

ROAD NAME CHANGES TO WI−119 [AIRPORT SPUR], TAKE RAMP (RIGHT) ONTO I−94 / I−894 W / MILWAUKEE, AT EXIT 316, TAKE RAMP (LEFT) ONTO I−43 I−894−BYP / I−43 S / FOND DU LAC / MADISON, KEEP LEFT ONTO I−894 [ZOO FWY] I−894 N / US−45 N, AT EXIT 1B, TAKE RAMP (LEFT) ONTO I−94 W / MADISON, KEEP STRAIGHT ONTO LOCAL ROAD(S) WI−30 W / MADISON, AT EXIT 4A, TAKE RAMP (LEFT) ONTO I−39 [I−90] I−39 S / I−90 E / JANESVILLE AT EXIT 142A, TAKE RAMP (RIGHT) ONTO US−12 [US−18] US−18 W / US−12 W / MADISON, AT EXIT 258, KEEP RIGHT ONTO RAMP US−151 / US−18 / DODGEVILLE, ROAD NAME CHANGES TO LOCAL ROAD(S) , TURN LEFT (SOUTH−WEST) ONTO US−151 [US−18], TURN RIGHT (WEST) ONTO WILLIAMSBURG WAY TURN LEFT (SOUTH) ONTO PRAIRIE RD., ARRIVE 2829 PRAIRIE RD, MADISON, WI 53719

PROJECT CONSULTANTS

PROJECT MANAGER:	SAC WIRELESS	ENGINEER/ARCHITECT:	FULLERTON ENGINEERING
ADDRESS:	540 W. MADISON ST. 17TH FLOOR CHICAGO, IL 60661	ADDRESS:	1100 E. WOODFIELD RD., SUITE 500 SCHAUMBURG, IL 60173
CONTACT:	MICHAEL CARRIGLIO (847) 347−2822 michael.carriglio@sacw.com	CONTACT:	HILDA ALLAWIRDI (847) 908−8413 hallawirdi@fullertonengineering.com
SITE AQUISITION:	SAC WIRELESS	CONSTRUCTION:	SAC WIRELESS
ADDRESS:	540 W. MADISON ST. 17TH FLOOR CHICAGO, IL 60661	ADDRESS:	540 W. MADISON ST., 17TH FLOOR CHICAGO, IL 60661
CONTACT:	BASIL S. WARD (312) 928−9959 Basil.Ward@sacw.com	CONTACT:	JAMES PRATHER James.Prather@sacw.com

APPLICABLE BUILDING CODES AND STANDARDS

ALL WORK AND MATERIALS SHALL BE PERFORMED AND INSTALLED IN ACCORDANCE WITH THE CURRENT EDITIONS OF THE FOLLOWING CODES AS ADOPTED BY THE LOCAL GOVERNING AUTHORITIES:

BUILDING CODE:
- WISCONSIN COMMERCIAL BUILDING CODE
- INTERNATIONAL BUILDING CODE, 2015 EDITION

ELECTRICAL CODE:
- NATIONAL ELECTRICAL CODE, 2017 EDITION

- FACILITY IS UNMANNED AND NOT FOR HUMAN HABITATION
- ADA ACCESS REQUIREMENTS ARE NOT REQUIRED
- THIS FACILITY DOES NOT REQUIRE POTABLE WATER AND WILL NOT PRODUCE ANY SEWAGE

CALL 811 OR
(800) 242-8511

811

FULLERTON ENGINEERING · DESIGN
1100 E. WOODFIELD ROAD, SUITE 500
SCHAUMBURG, ILLINOIS 60173
TEL: 847-908-8400
COA# 3620-11
www.FullertonEngineering.com

SAC WIRELESS
540 W. MADISON ST.
17TH FLOOR
CHICAGO, IL 60661

AT&T
930 NATIONAL PARKWAY
4th FLOOR
SCHAUMBURG, IL 60173

WI2022
10080264
PRAIRIE ROAD WT
2829 PRAIRIE ROAD
MADISON, WI 53719

#	DATE	REVISION	BY	CHK.
0	11/16/17	FINAL	LA	HA
B	10/18/17	100% REVIEW	LA	HA
A	10/9/17	90% REVIEW	LA	HA

SCALE: AS SHOWN APP'D BY: DS

WISCONSIN
DANIEL W. SMITH
44096-6
SCHAUMBURG, IL
PROFESSIONAL ENGINEER

DRAWING NAME	DRAWING NO.
TITLE SHEET	T−1

PROJECT# 2017.0279.0063

EXHIBIT C (Sheet 2 of 10)

GENERAL CONSTRUCTION

1. FOR THE PURPOSE OF CONSTRUCTION DRAWINGS, THE FOLLOWING DEFINITIONS SHALL APPLY:
   CONTRACTOR/CM – SAC WIRELESS
   SUB–CONTRACTOR – SAC WIRELESS
   OWNER – AT&T WIRELESS
2. ALL SITE WORK SHALL BE COMPLETED AS INDICATED ON THE DRAWINGS AND AT&T PROJECT SPECIFICATIONS.
3. GENERAL CONTRACTOR SHALL VISIT THE SITE AND SHALL FAMILIARIZE HIMSELF WITH ALL CONDITIONS AFFECTING THE PROPOSED WORK AND SHALL MAKE PROVISIONS. GENERAL CONTRACTOR SHALL BE RESPONSIBLE FOR FAMILIARIZING HIMSELF WITH ALL CONTRACT DOCUMENTS, FIELD CONDITIONS, DIMENSIONS, AND CONFIRMING THAT THE WORK MAY BE ACCOMPLISHED AS SHOWN PRIOR TO PROCEEDING WITH CONSTRUCTION. ANY DISCREPANCIES SHALL BE BROUGHT TO THE ATTENTION OF THE ENGINEER PRIOR TO THE COMMENCEMENT OF WORK.
4. ALL MATERIALS FURNISHED AND INSTALLED SHALL BE IN STRICT ACCORDANCE WITH ALL APPLICABLE CODES, REGULATIONS, AND ORDINANCES. GENERAL CONTRACTOR SHALL ISSUE ALL APPROPRIATE NOTICES AND COMPLY WITH ALL LAWS, ORDINANCES, RULES, REGULATIONS, AND LAWFUL ORDERS OF ANY PUBLIC AUTHORITY REGARDING THE PERFORMANCE OF WORK.
5. ALL WORK CARRIED OUT SHALL COMPLY WITH ALL APPLICABLE MUNICIPAL AND UTILITY COMPANY SPECIFICATIONS AND LOCAL JURISDICTIONAL CODES, ORDINANCES, AND APPLICABLE REGULATIONS.
6. UNLESS NOTED OTHERWISE, THE WORK SHALL INCLUDE FURNISHING MATERIALS, EQUIPMENT, APPURTENANCES, AND LABOR NECESSARY TO COMPLETE ALL INSTALLATIONS AS INDICATED ON THE DRAWINGS.
7. PLANS ARE NOT TO BE SCALED. THESE PLANS ARE INTENDED TO BE A DIAGRAMMATIC OUTLINE ONLY UNLESS OTHERWISE NOTED. DIMENSIONS SHOWN ARE TO FINISH SURFACES UNLESS OTHERWISE NOTED. SPACING BETWEEN EQUIPMENT IS THE MINIMUM REQUIRED CLEARANCE. THEREFORE, IT IS CRITICAL TO FIELD VERIFY DIMENSIONS, SHOULD THERE BE ANY QUESTIONS REGARDING THE CONTRACT DOCUMENTS, THE CONTRACTOR SHALL BE RESPONSIBLE FOR OBTAINING A CLARIFICATION FROM THE ENGINEER PRIOR TO PROCEEDING WITH THE WORK. DETAILS ARE INTENDED TO SHOW DESIGN INTENT. MODIFICATIONS MAY BE REQUIRED TO SUIT JOB DIMENSIONS OR CONDITIONS AND SUCH MODIFICATIONS SHALL BE INCLUDED AS PART OF WORK AND PREPARED BY THE ENGINEER PRIOR TO PROCEEDING WITH WORK.
8. THE CONTRACTOR SHALL INSTALL ALL EQUIPMENT AND MATERIALS IN ACCORDANCE WITH MANUFACTURER'S RECOMMENDATIONS UNLESS SPECIFICALLY STATED OTHERWISE.
9. IF THE SPECIFIED EQUIPMENT CANNOT BE INSTALLED AS SHOWN ON THESE DRAWINGS, THE CONTRACTOR SHALL PROPOSE AN ALTERNATIVE INSTALLATION SPACE FOR APPROVAL BY THE ENGINEER PRIOR TO PROCEEDING.
10. GENERAL CONTRACTOR SHALL BE RESPONSIBLE FOR THE SAFETY OF WORK AREA, ADJACENT AREAS AND BUILDING OCCUPANTS THAT ARE LIKELY TO BE AFFECTED BY THE WORK UNDER THIS CONTRACT. WORK SHALL CONFIRM TO ALL OSHA REQUIREMENTS AND THE LOCAL JURISDICTION.
11. GENERAL CONTRACTOR SHALL COORDINATE WORK AND SCHEDULE WORK ACTIVITIES WITH OTHER DISCIPLINES.
12. ERECTION SHALL BE DONE IN A WORKMANLIKE MANNER BY COMPETENT EXPERIENCED WORKMAN IN ACCORDANCE WITH APPLICABLE CODES AND THE BEST ACCEPTED PRACTICE. ALL MEMBERS SHALL BE LAID PLUMB AND TRUE AS INDICATED ON THE DRAWINGS.
13. SEAL PENETRATIONS THROUGH FIRE RATED AREAS WITH UL LISTED MATERIALS APPROVED BY LOCAL JURISDICTION. CONTRACTOR SHALL KEEP AREA CLEAN, HAZARD FREE, AND DISPOSE OF ALL DEBRIS.
14. WORK PREVIOUSLY COMPLETED IS REPRESENTED BY LIGHT SHADED LINES AND NOTES. THE SCOPE OF WORK FOR THIS PROJECT IS REPRESENTED BY DARK SHADED LINES AND NOTES. CONTRACTOR SHALL NOTIFY THE GENERAL CONTRACTOR OF ANY EXISTING CONDITIONS THAT DEVIATE FROM THE DRAWINGS PRIOR TO BEGINNING CONSTRUCTION.
15. CONTRACTOR SHALL PROVIDE WRITTEN NOTICE TO THE CONSTRUCTION MANAGER 48 HOURS PRIOR TO COMMENCEMENT OF WORK.
16. THE CONTRACTOR SHALL PROTECT EXISTING IMPROVEMENTS, PAVEMENTS, CURBS, LANDSCAPING AND STRUCTURES. ANY DAMAGED PART SHALL BE REPAIRED AT CONTRACTOR'S EXPENSE TO THE SATISFACTION OF THE OWNER.
17. THE CONTRACTOR SHALL CONTACT UTILITY LOCATING SERVICES PRIOR TO THE START OF CONSTRUCTION.
18. GENERAL CONTRACTOR SHALL COORDINATE AND MAINTAIN ACCESS FOR ALL TRADES AND CONTRACTORS TO THE SITE AND/OR BUILDING.
19. THE GENERAL CONTRACTOR SHALL BE RESPONSIBLE FOR SECURITY OF THE SITE FOR THE DURATION OF CONSTRUCTION UNTIL JOB COMPLETION.
20. THE GENERAL CONTRACTOR SHALL MAINTAIN IN GOOD CONDITION ONE COMPLETE SET OF PLANS WITH ALL REVISIONS, ADDENDA, AND CHANGE ORDERS ON THE PREMISES AT ALL TIMES.
21. THE GENERAL CONTRACTOR SHALL PROVIDE PORTABLE FIRE EXTINGUISHERS WITH A RATING OF NOT LESS THAN 2–A OT 2–A:10–B:C AND SHALL BE WITHIN 25 FEET OF TRAVEL DISTANCE TO ALL PORTIONS OF WHERE THE WORK IS BEING COMPLETED DURING CONSTRUCTION.
22. ALL EXISTING ACTIVE SEWER, WATER, GAS, ELECTRIC, AND OTHER UTILITIES SHALL BE PROTECTED AT ALL TIMES, AND WHERE REQUIRED FOR THE PROPER EXECUTION OF THE WORK, SHALL BE RELOCATED AS DIRECTED BY THE ENGINEER. EXTREME CAUTION SHOULD BE USED BY THE CONTRACTOR WHEN EXCAVATING OR DRILLING PIERS AROUND OR NEAR UTILITIES. CONTRACTOR SHALL PROVIDE SAFETY TRAINING FOR THE WORKING CREW. THIS SHALL INCLUDE BUT NOT BE LIMITED TO A) FALL PROTECTION, B) CONFINED SPACE, C) ELECTRICAL SAFETY, AND D) TRENCHING & EXCAVATION.
23. ALL EXISTING INACTIVE SEWER, WATER, GAS, ELECTRIC, AND OTHER UTILITIES, WHICH INTERFERE WITH THE EXECUTION OF THE WORK, SHALL BE REMOVED, CAPPED, PLUGGED OR OTHERWISE DISCONNECTED AT POINTS WHICH WILL NOT INTERFERE WITH THE EXECUTION OF THE WORK, AS DIRECTED BY THE RESPONSIBLE ENGINEER, AND SUBJECT TO THE APPROVAL OF THE OWNER AND/OR LOCAL UTILITIES.
24. THE AREAS OF THE OWNER'S PROPERTY DISTURBED BY THE WORK AND NOT COVERED BY THE TOWER, EQUIPMENT OR DRIVEWAY, SHALL BE GRADED TO A UNIFORM SLOPE, AND STABILIZED TO PREVENT EROSION.
25. CONTRACTOR SHALL MINIMIZE DISTURBANCE TO THE EXISTING SITE DURING CONSTRUCTION. EROSION CONTROL MEASURES, IF REQUIRED DURING CONSTRUCTION, SHALL BE IN CONFORMANCE WITH THE FEDERAL AND LOCAL JURISDICTION FOR EROSION AND SEDIMENT CONTROL.
26. NO FILL OR EMBANKMENT MATERIAL SHALL BE PLACED ON FROZEN GROUNDING. FROZEN MATERIALS, SNOW OR ICE SHALL NOT BE PLACED IN ANY FILL OR EMBANKMENT.
27. THE SUBGRADE SHALL BE BROUGHT TO A SMOOTH UNIFORM GRADE AND COMPACTED TO 95 PERCENT STANDARD PROCTOR DENSITY UNDER PAVEMENT AND STRUCTURES AND 80 PERCENT STANDARD PROCTOR DENSITY IN OPEN SPACE. ALL TRENCHES IN PUBLIC RIGHT OF WAY SHALL BE BACKFILLED WITH FLOWABLE FILL OR OTHER MATERIAL PRE–APPROVED BY THE LOCAL JURISDICTION.
28. ALL NECESSARY RUBBISH, STUMPS, DEBRIS, STICKS, STONES, AND OTHER REFUSE SHALL BE REMOVED FROM THE SITE AND DISPOSED OF IN A LAWFUL MANNER.
29. ALL BROCHURES, OPERATING AND MAINTENANCE MANUALS, CATALOGS, SHOP DRAWINGS, AND OTHER DOCUMENTS SHALL BE TURNED OVER TO THE GENERAL CONTRACTOR AT COMPLETION OF CONSTRUCTION AND PRIOR TO PAYMENT.
30. CONTRACTOR SHALL SUBMIT A COMPLETE SET OF AS–BUILT REDLINES TO THE GENERAL CONTRACTOR UPON COMPLETION OF PROJECT AND PRIOR TO FINAL PAYMENT.
31. CONTRACTOR SHALL LEAVE PREMISES IN A CLEAN CONDITION.
32. THE PROPOSED FACILITY WILL BE UNMANNED AND DOES NOT REQUIRE POTABLE WATER OR SEWER SERVICE, AND IS NOT FOR HUMAN HABITAT (NO HANDICAP ACCESS REQUIRED).
33. OCCUPANCY IS LIMITED TO PERIODIC MAINTENANCE AND INSPECTION, APPROXIMATELY 2 TIMES PER MONTH, BY AT&T TECHNICIANS.
34. NO OUTDOOR STORAGE OR SOLID WASTE CONTAINERS ARE PROPOSED.
35. ALL MATERIAL SHALL BE FURNISHED AND WORK SHALL BE PERFORMED IN ACCORDANCE WITH THE LATEST REVISION AT&T MOBILITY GROUNDING STANDARD "TECHNICAL SPECIFICATION FOR CONSTRUCTION OF GSM/GPRS WIRELESS SITES" AND "TECHNICAL SPECIFICATION FOR FACILITY GROUNDING". IN CASE OF A CONFLICT BETWEEN THE CONSTRUCTION SPECIFICATION AND THE DRAWINGS, THE DRAWINGS SHALL GOVERN.
36. CONTRACTORS SHALL BE RESPONSIBLE FOR OBTAINING ALL PERMITS AND INSPECTIONS REQUIRED FOR CONSTRUCTION. IF CONTRACTOR CANNOT OBTAIN A PERMIT, THEY MUST NOTIFY THE GENERAL CONTRACTOR IMMEDIATELY.
37. CONTRACTOR SHALL REMOVE ALL TRASH AND DEBRIS FROM THE SITE ON A DAILY BASIS.
38. INFORMATION SHOWN ON THESE DRAWINGS WAS OBTAINED FROM SITE VISITS AND/OR DRAWINGS PROVIDED BY THE SITE OWNER. CONTRACTORS SHALL NOTIFY THE ENGINEER OF ANY DISCREPANCIES PRIOR TO ORDERING MATERIAL OR PROCEEDING WITH CONSTRUCTION.
39. NO WHITE STROBE LIGHTS ARE PERMITTED. LIGHTING IF REQUIRED, WILL MEET FAA STANDARDS AND REQUIREMENTS.

ANTENNA MOUNTING

40. DESIGN AND CONSTRUCTION OF ANTENNA SUPPORTS SHALL CONFORM TO CURRENT ANSI/TIA–222 OR APPLICABLE LOCAL CODES.
41. ALL STEEL MATERIALS SHALL BE GALVANIZED AFTER FABRICATION IN ACCORDANCE WITH ASTM A123 "ZINC (HOT–DIP GALVANIZED) COATINGS ON IRON AND STEEL PRODUCTS", UNLESS NOTED OTHERWISE.
42. ALL BOLTS, ANCHORS AND MISCELLANEOUS HARDWARE SHALL BE GALVANIZED IN ACCORDANCE WITH ASTM A153 "ZINC–COATING (HOT–DIP) ON IRON AND STEEL HARDWARE", UNLESS NOTED OTHERWISE.
43. DAMAGED GALVANIZED SURFACES SHALL BE REPAIRED BY COLD GALVANIZING IN ACCORDANCE WITH ASTM A780.
44. ALL ANTENNA MOUNTS SHALL BE INSTALLED WITH LOCK NUTS, DOUBLE NUTS AND SHALL BE TORQUED TO MANUFACTURER'S RECOMMENDATIONS.
45. CONTRACTOR SHALL INSTALL ANTENNA PER MANUFACTURER'S RECOMMENDATION FOR INSTALLATION AND GROUNDING.
46. ALL UNUSED PORTS ON ANY ANTENNAS SHALL BE TERMINATED WITH A 50–OHM LOAD TO ENSURE ANTENNAS PERFORM AS DESIGNED.
47. PRIOR TO SETTING ANTENNA AZIMUTHS AND DOWNTILTS, ANTENNA CONTRACTOR SHALL CHECK THE ANTENNA MOUNT FOR TIGHTNESS AND ENSURE THAT THEY ARE PLUMB. ANTENNA AZIMUTHS SHALL BE SET FROM TRUE NORTH AND BE ORIENTED WITHIN +/– 5% AS DEFINED BY THE RFDS. ANTENNA DOWNTILTS SHALL BE WITHIN +/– 0.5% AS DEFINED BY THE RFDS. REFER TO ND–00246.
48. JUMPERS FROM THE TMA'S MUST TERMINATE TO OPPOSITE POLARIZATION'S IN EACH SECTOR.
49. CONTRACTOR SHALL RECORD THE SERIAL #, SECTOR, AND POSITION OF EACH ACTUATOR INSTALLED AT THE ANTENNAS AND PROVIDE THE INFORMATION TO AT&T.
50. TMA'S SHALL BE MOUNTED ON PIPE DIRECTLY BEHIND ANTENNAS AS CLOSE TO ANTENNA AS FEASIBLE IN A VERTICAL POSITION.

TORQUE REQUIREMENTS

51. ALL RF CONNECTIONS SHALL BE TIGHTENED BY A TORQUE WRENCH.
52. ALL RF CONNECTIONS, GROUNDING HARDWARE AND ANTENNA HARDWARE SHALL HAVE A TORQUE MARK INSTALLED IN A CONTINUOUS STRAIGHT LINE FROM BOTH SIDES OF THE CONNECTION.
    A. RF CONNECTION BOTH SIDES OF THE CONNECTOR.
    B. GROUNDING AND ANTENNA HARDWARE ON THE NUT SIDE STARTING FROM THE THREADS TO THE SOLID SURFACE. EXAMPLE OF SOLID SURFACE: GROUND BAR, ANTENNA BRACKET METAL.

FIBER & POWER CABLE MOUNTING

53. THE FIBER OPTIC TRUNK CABLES SHALL BE INSTALLED INTO CONDUITS, CHANNEL CABLE TRAYS, OR CABLE TRAY. WHEN INSTALLING FIBER OPTIC TRUNK CABLES INTO A CABLE TRAY SYSTEM, THEY SHALL BE INSTALLED INTO AN INTER DUCT AND A PARTITION BARRIER SHALL BE INSTALLED BETWEEN THE 600 VOLT CABLES AND THE INTER DUCT IN ORDER TO SEGREGATE CABLE TYPES. OPTIC FIBER TRUNK CABLES SHALL HAVE APPROVED CABLE RESTRAINTS EVERY (60) SIXTY FEET AND SECURELY FASTENED TO THE CABLE TRAY SYSTEM. NFPA 70 (NEC) ARTICLE 770 RULES SHALL APPLY.
54. THE TYPE TC–ER CABLES SHALL BE INSTALLED INTO CONDUITS, CHANNEL CABLE TRAYS, OR CABLE TRAY AND SHALL BE SECURED AT INTERVALS NOT EXCEEDING (6) SIX FEET. AN EXCEPTION; WHERE TYPE TC–ER CABLES ARE NOT SUBJECT TO PHYSICAL DAMAGE, CABLES SHALL BE PERMITTED TO MAKE A TRANSITION BETWEEN CONDUITS, CHANNEL CABLE TRAYS, OR CABLE TRAY WHICH ARE SERVING UTILIZATION EQUIPMENT OR DEVICES, A DISTANCE (6) SIX FEET SHALL NOT BE EXCEEDED WITHOUT CONTINUOUS SUPPORTING. NFPA 70 (NEC) ARTICLES 336 AND 392 RULES SHALL APPLY.
55. WHEN INSTALLING OPTIC FIBER TRUNK CABLES OR TYPE TC–ER CABLES INTO CONDUITS, NFPA 70 (NEC) ARTICLE 300 RULES SHALL APPLY.

COAXIAL CABLE NOTES

62. TYPES AND SIZES OF THE ANTENNA CABLE ARE BASED ON ESTIMATED LENGTHS. PRIOR

    ORDERING CABLE, CONTRACTOR SHALL VERIFY ACTUAL LENGTH BASED ON CONSTRUCTION LAYOUT AND NOTIFY THE PROJECT MANAGER IF ACTUAL LENGTHS EXCEED ESTIMATED LENGTHS.
63. CONTRACTOR SHALL VERIFY THE DOWN–TILT OF EACH ANTENNA WITH A DIGITAL LEVEL.
64. CONTRACTOR SHALL CONFIRM COAX COLOR CODING PRIOR TO CONSTRUCTION.
65. ALL JUMPERS TO THE ANTENNAS FROM THE MAIN TRANSMISSION LINE SHALL BE 1/2" DIA. LDF AND SHALL NOT EXCEED 6'–0".
66. ALL COAXIAL CABLE SHALL BE SECURED TO THE DESIGNED SUPPORT STRUCTURE, IN AN APPROVED MANNER, AT DISTANCES NOT TO EXCEED 4'–0" OC.
67. CONTRACTOR SHALL FOLLOW ALL MANUFACTURER'S RECOMMENDATIONS REGARDING BOTH THE INSTALLATION AND GROUNDING OF ALL COAXIAL CABLES, CONNECTORS, ANTENNAS, AND ALL OTHER EQUIPMENT.
68. CONTRACTOR SHALL GROUND ALL EQUIPMENT. INCLUDING ANTENNAS, RET MOTORS, TMA'S, COAX CABLES, AND RET CONTROL CABLES AS A COMPLETE SYSTEM. GROUNDING SHALL BE EXECUTED BY QUALIFIED WIREMEN IN COMPLIANCE WITH MANUFACTURER'S SPECIFICATION AND RECOMMENDATION.
69. CONTRACTOR SHALL PROVIDE STRAIN–RELIEF AND CABLE SUPPORTS FOR ALL CABLE ASSEMBLIES, COAX CABLES, AND RET CONTROL CABLES. CABLE STRAIN–RELIEFS AND CABLE SUPPORTS SHALL BE APPROVED FOR THE PURPOSE. INSTALLATION SHALL BE IN ACCORDANCE WITH MANUFACTURER'S SPECIFICATIONS AND RECOMMENDATIONS.
70. CONTRACTOR TO VERIFY THAT EXISTING COAX HANGERS ARE STACKABLE SNAP IN HANGERS. IF EXISTING HANGERS ARE NOT STACKABLE SNAP IN HANGERS THE CONTRACTOR SHALL REPLACE EXISTING HANGERS WITH NEW SNAP IN HANGERS IF APPLICABLE.

GENERAL CABLE AND EQUIPMENT NOTES

71. CONTRACTOR SHALL BE RESPONSIBLE TO VERIFY ANTENNA, TMAS, DIPLEXERS, AND COAX CONFIGURATION, MAKE AND MODELS PRIOR TO INSTALLATION.
72. ALL CONNECTIONS FOR HANGERS, SUPPORTS, BRACING, ETC. SHALL BE INSTALLED PER TOWER MANUFACTURER'S RECOMMENDATIONS.
73. CONTRACTOR SHALL REFERENCE THE TOWER STRUCTURAL ANALYSIS/DESIGN DRAWINGS FOR DIRECTIONS ON CABLE DISTRIBUTION/ROUTING.
74. ALL OUTDOOR RF CONNECTORS/CONNECTIONS SHALL BE WEATHERPROOFED, EXCEPT THE RET CONNECTORS, USING BUTYL TAPE AFTER INSTALLATION AND FINAL CONNECTIONS ARE MADE. BUTYL TAPE SHALL HAVE A MINIMUM OF ONE–HALF TAPE WIDTH OVERLAP ON EACH TURN AND EACH LAYER SHALL BE WRAPPED THREE TIMES. WEATHERPROOFING SHALL BE SMOOTH WITHOUT BUCKLING. BUTYL BLEEDING IS NOT ALLOWED.
75. IF REQUIRED TO PAINT ANTENNAS AND/OR COAX:
    A. TEMPERATURE SHALL BE ABOVE 50° F.
    B. PAINT COLOR MUST BE APPROVED BY BUILDING OWNER/LANDLORD.
    C. FOR REGULATED TOWERS, FAA/FCC APPROVED PAINT IS REQUIRED.
    D. DO NOT PAINT OVER COLOR CODING OR ON EQUIPMENT MODEL NUMBERS.
76. ALL CABLES SHALL BE GROUNDED WITH COAXIAL CABLE GROUND KITS. FOLLOW THE MANUFACTURER'S RECOMMENDATIONS.
    A. GROUNDING AT THE ANTENNA LEVEL.
    B. GROUNDING AT MID LEVEL, TOWERS WHICH ARE OVER 200'–0", ADDITIONAL CABLE GROUNDING REQUIRED.
    C. GROUNDING AT BASE OF TOWER PRIOR TO TURNING HORIZONTAL.
    D. GROUNDING OUTSIDE THE EQUIPMENT SHELTER AT ENTRY PORT.
    E. GROUNDING INSIDE THE EQUIPMENT SHELTER AT THE ENTRY PORT.
77. ALL PROPOSED GROUND BAR DOWNLEADS ARE TO BE TERMINATED TO THE EXISTING ADJACENT GROUND BAR DOWNLEADS A MINIMUM DISTANCE OF 4'–0" BELOW GROUND BAR. TERMINATIONS MAY BE EXOTHERMIC OR COMPRESSION.

FULLERTON ENGINEERING·DESIGN
1100 E. WOODFIELD ROAD, SUITE 500
SCHAUMBURG, ILLINOIS 60173
TEL: 847-908-8400
COA# 3620-11
www.FullertonEngineering.com

SAC WIRELESS
540 W. MADISON ST.
17TH FLOOR
CHICAGO, IL 60661

AT&T
930 NATIONAL PARKWAY
4th FLOOR
SCHAUMBURG, IL 60173

WI2022
10080264

PRAIRIE ROAD WT

2829 PRAIRIE ROAD
MADISON, WI 53719

#	DATE	REVISION	BY	CHK.
0	11/16/17	FINAL	LA	HA
B	10/18/17	100% REVIEW	LA	HA
A	10/9/17	90% REVIEW	LA	HA

SCALE: AS SHOWN | APP'D BY: DS

WISCONSIN
DANIEL W. SMITH
44096-6
SCHAUMBURG, IL
PROFESSIONAL ENGINEER

DRAWING NAME: NOTES AND SPECIFICATIONS

DRAWING NO. SP–1

PROJECT# 2017.0279.0063

EXHIBIT C (Sheet 3 of 10)

ABBREVIATIONS

AFF	ABOVE FINISHED FLOOR
AGL	ABOVE GRADE LEVEL
AMSL	ABOVE MEAN SEA LEVEL
APPROX	APPROXIMATE
ATS	AUTOMATIC TRANSFER SWITCH
AWG	AMERICAN WIRE GAUGE
BLDG	BUILDING
BTS	BASE TRANSMISSION STATION
℄	CENTERLINE
CLR	CLEAR
COL	COLUMN
CONC	CONCRETE
CND	CONDUIT
DWG	DRAWING
FT	FOOT(FEET)
EGB	EQUIPMENT GROUND BAR
ELEC	ELECTRICAL
EMT	ELECTRICAL METALLIC TUBING
ELEV	ELEVATION
EQUIP	EQUIPMENT
(E)	EXISTING
EXT	EXTERIOR
FND	FOUNDATION
F	FIBER
FIF	FACILITY INTERFACE FRAME
GA	GAUGE
GALV	GALVANIZED
GPS	GLOBAL POSITIONING SYSTEM
GND	GROUND
GSM	GLOBAL SYSTEM FOR MOBILE COMMUNICATION
LTE	LONG TERM EVOLUTION
MAX	MAXIMUM
MCPA	MULTI-CARRIER POWER AMPLIFIER
MFR	MANUFACTURER
MGB	MASTER GROUND BAR
MIN	MINIMUM
MTS	MANUAL TRANSFER SWITCH
N.T.S.	NOT TO SCALE
O.C.	ON CENTER
OE/OT	OVERHEAD ELECTRIC/TELCO
PPC	POWER PROTECTION CABINET
PL	PROPERY LINE
RBS	RADIO BASED STATION
RET	REMOTE ELECTRIC TILT
RRU	REMOTE RADIO UNIT
RGS	RIGID GALVANIZED STEEL
IN	INCH(ES)
INT	INTERIOR
LB(S), #	POUND(S)
SF	SQUARE FOOT
STL	STEEL
TMA	TOWER MOUNTED AMPLIFIER
TYP	TYPICAL
UE/UT	UNDERGROUND ELECTRIC/TELCO
UNO	UNLESS NOTED OTHERWISE
UMTS	UNIVERSAL MOBILE TELE-COMMUNICATION SYSTEM
VIF	VERIFY IN FIELD
W/	WITH
XFMR	TRANSFORMER

SYMBOLS

- REVISION
- WORK POINT
- UTILITY POLE
- COMPRESSED STONE
- BRICK
- GRAVEL
- CONCRETE
- MASONRY
- EARTH
- STEEL
- CENTERLINE
- PROPERTY LINE
- LEASE LINE
- EASEMENT LINE
- CHAIN LINK FENCE
- WOOD FENCE
- UE — BELOW GRADE ELECTRIC
- UT — BELOW GRADE TELEPHONE
- OE/OT — OVERHEAD ELECTRIC/TELEPHONE
- SECTION REFERENCE

NOTE:

EXISTING EQUIPMENT TO BE UPGRADED AS NEEDED TO SUPPORT NEW 4C/5C/6C EQUIPMENT INSTALLATION

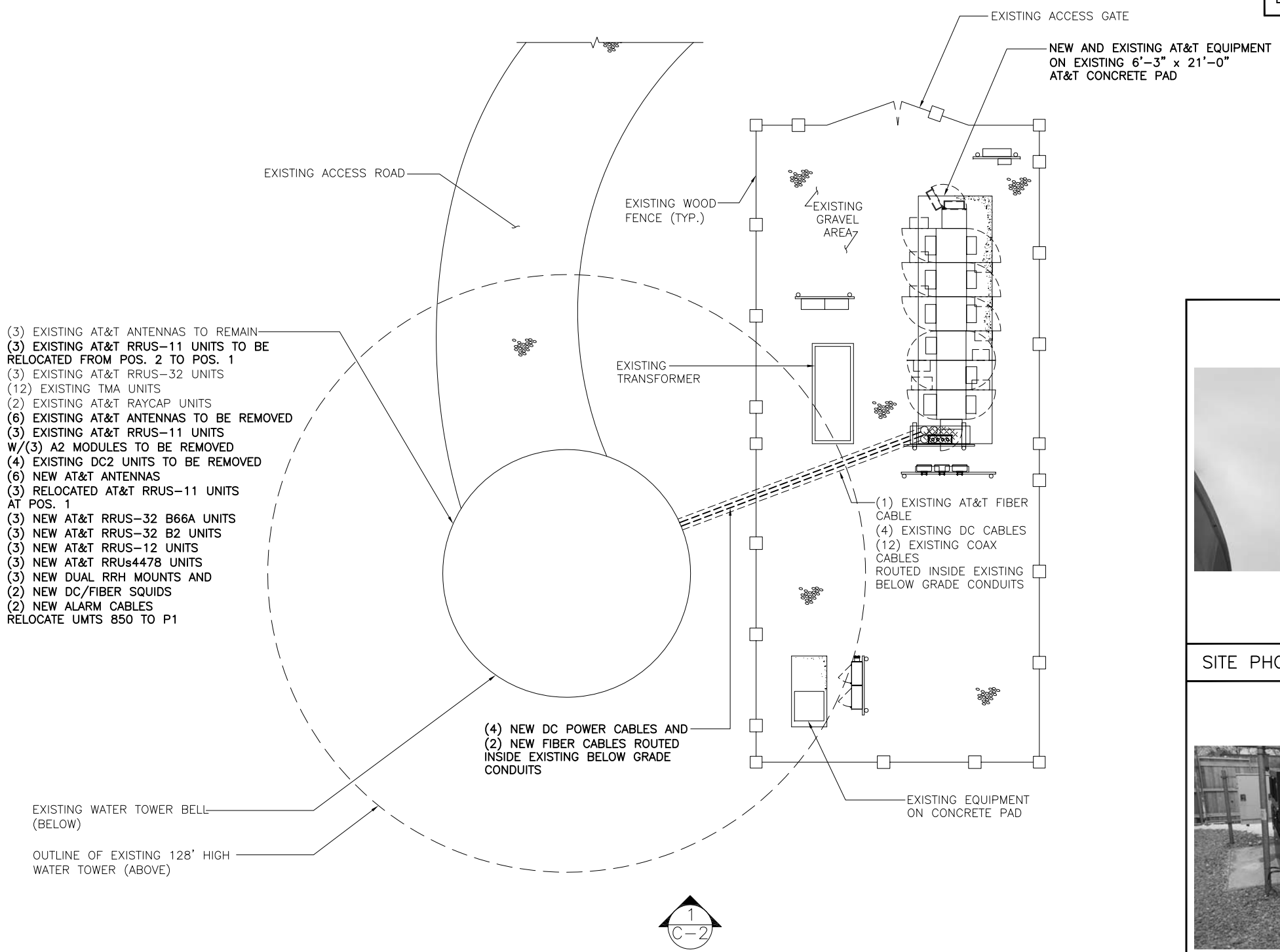

SITE PLAN 1

0 2' 4' 8' 16'

SCALE: 3/32" = 1'-0"

SITE PHOTO 1 2

SITE PHOTO 2 3

FULLERTON ENGINEERING·DESIGN
1100 E. WOODFIELD ROAD, SUITE 500
SCHAUMBURG, ILLINOIS 60173
TEL: 847-908-8400
COA# 3620-11
www.FullertonEngineering.com

SBC WIRELESS
540 W. MADISON ST.
17TH FLOOR
CHICAGO, IL 60661

AT&T
930 NATIONAL PARKWAY
4th FLOOR
SCHAUMBURG, IL 60173

WI2022
10080264

PRAIRIE ROAD WT

2829 PRAIRIE ROAD
MADISON, WI 53719

#	DATE	REVISION	BY	CHK.
0	11/16/17	FINAL	LA	HA
B	10/18/17	100% REVIEW	LA	HA
A	10/9/17	90% REVIEW	LA	HA

SCALE: AS SHOWN APP'D BY: DS

WISCONSIN DANIEL W. SMITH 44096-6 SCHAUMBURG, IL PROFESSIONAL ENGINEER

DRAWING NAME	DRAWING NO.
SITE PLAN	C-1

PROJECT# 2017.0279.0063

EXHIBIT C (Sheet 4 of 10)

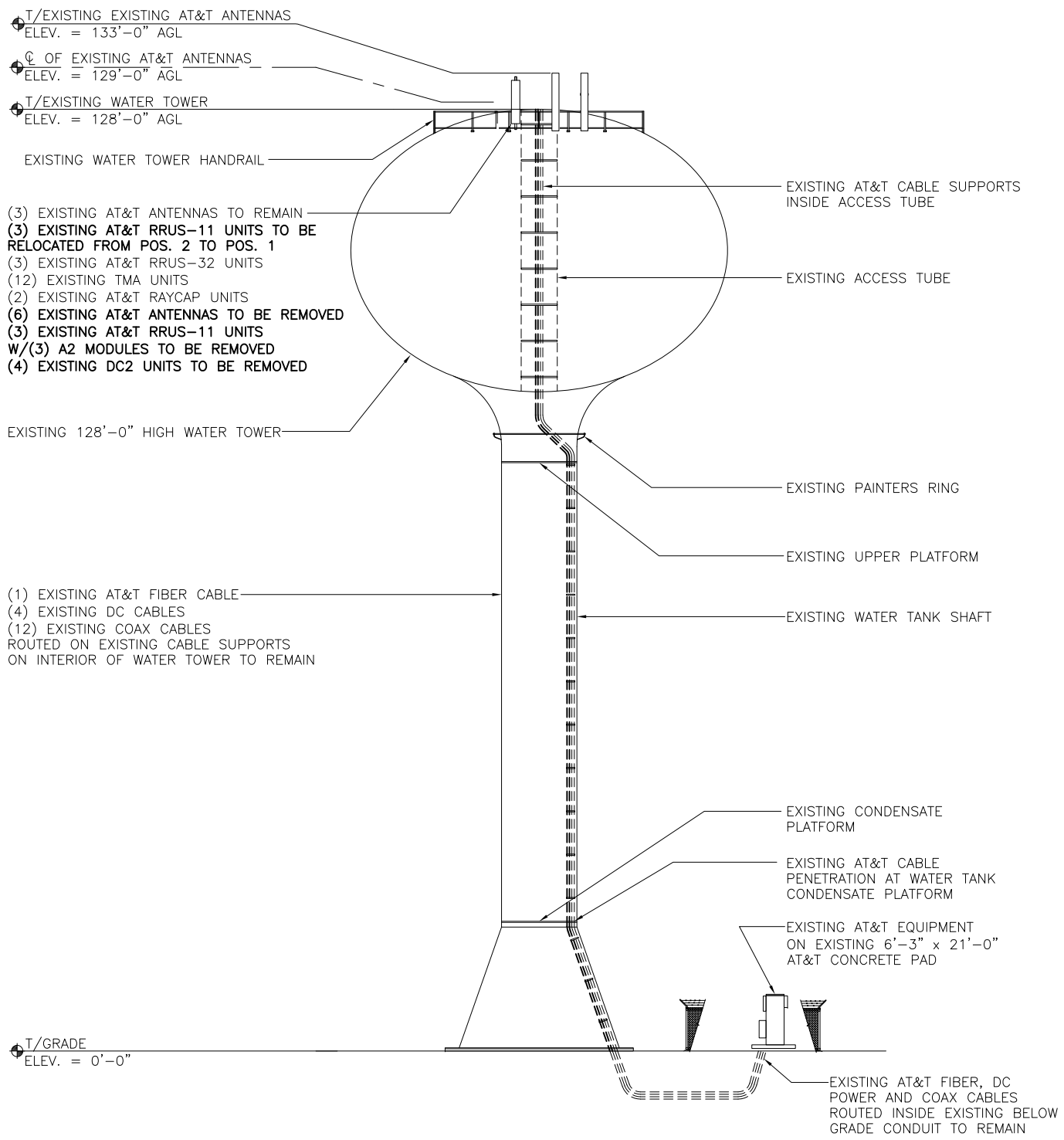

EXISTING ELEVATION

0 15 30 45 SCALE: 1" = 30'-0" 1

NOTES:

1. CALCULATIONS FOR THE STRUCTURE WERE PREPARED BY FULLERTON AND THOSE CALCULATIONS CERTIFY THE CAPACITY OF THE STRUCTURE TO SUPPORT THE NEW EQUIPMENT
2. CALCULATIONS FOR THE ANTENNA MOUNTS WERE PREPARED BY OTHERS AND THOSE CALCULATIONS CERTIFY THE CAPACITY OF THE STRUCTURE TO SUPPORT THE NEW EQUIPMENT
3. CABLES NOT SHOWN FOR CLARITY

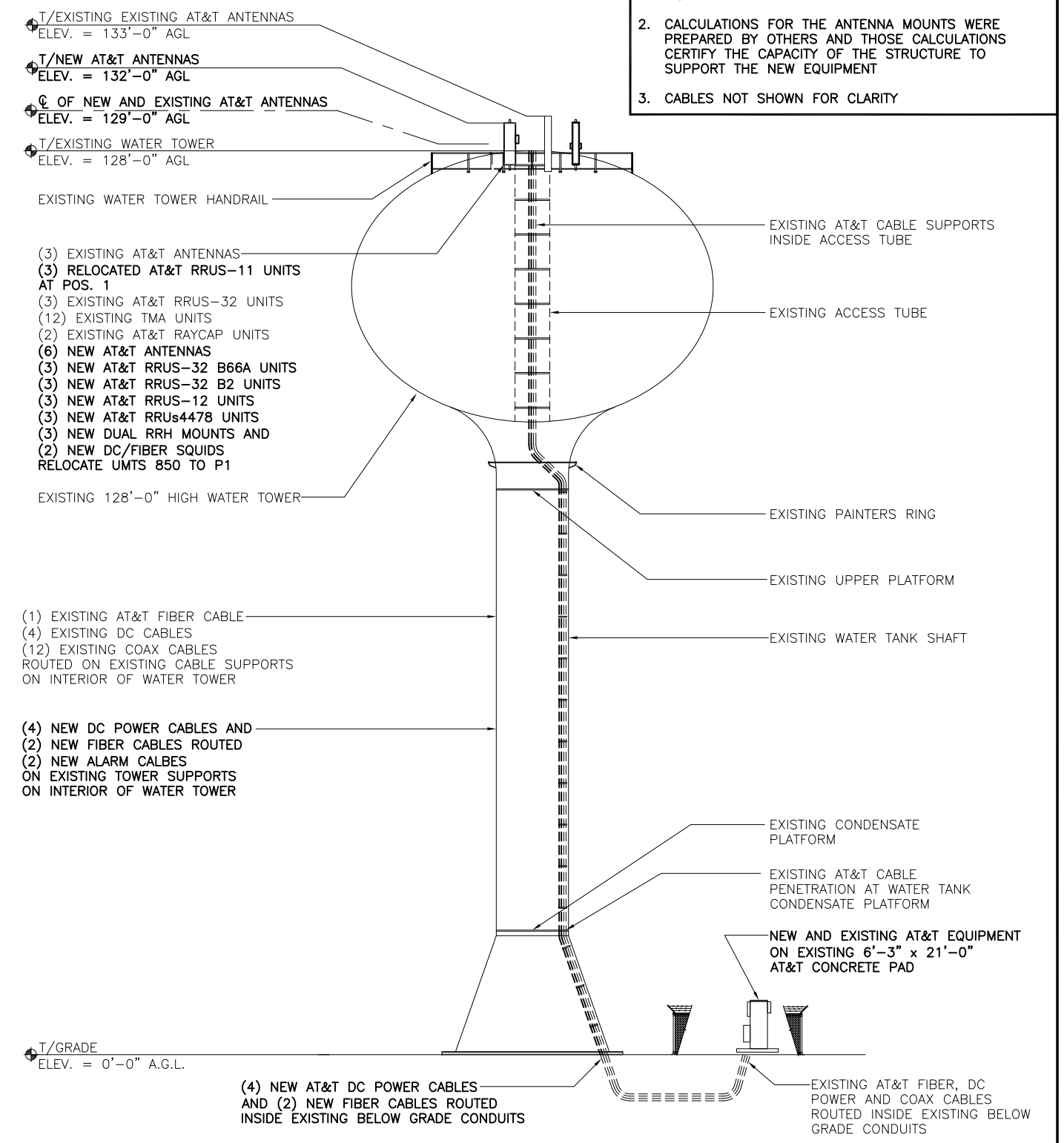

NEW ELEVATION

0 15 30 45 SCALE: 1" = 30'-0" 2

FULLERTON ENGINEERING·DESIGN
1100 E. WOODFIELD ROAD, SUITE 500
SCHAUMBURG, ILLINOIS 60173
TEL: 847-908-8400
COA# 3620-11
www.FullertonEngineering.com

SBC WIRELESS
540 W. MADISON ST.
17TH FLOOR
CHICAGO, IL 60661

AT&T
930 NATIONAL PARKWAY
4th FLOOR
SCHAUMBURG, IL 60173

WI2022
10080264

PRAIRIE ROAD WT

2829 PRAIRIE ROAD
MADISON, WI 53719

#	DATE	REVISION	BY	CHK.
0	11/16/17	FINAL	LA	HA
B	10/18/17	100% REVIEW	LA	HA
A	10/9/17	90% REVIEW	LA	HA

SCALE: AS SHOWN APP'D BY: DS

WISCONSIN
DANIEL W. SMITH
44096-6
SCHAUMBURG, IL
PROFESSIONAL ENGINEER

DRAWING NAME: ELEVATIONS

DRAWING NO. C-2

PROJECT# 2017.0279.0063

EXHIBIT C (Sheet 5 of 10)

MODIFICATION SUMMARY:

POS.1: (3) EXISTING PANEL ANTENNAS TO BE REMOVED. INSTALL (3) NEW COMMSCOPE SBJAH4-1D65B-DL ANTENNAS. (6) EXISTING TMA UNITS TO REMAIN. (3) EXISTING RRUS-32 UNITS TO REMAIN. (3) RELOCATED RRUS-11 UNITS FROM POS. 1. INSTALL (3) NEW RRUS-32 B66A UNITS. INSTALL (3) NEW RRUs4478 UNITS. INSTALL (3) NEW DUAL RRH MOUNTS. EXISTING ANTENNA MOUNTING PIPE TO BE REUSED, REPLACED OR RELOCATED AS REQUIRED.

POS.2: (3) EXISTING PANEL ATENNAS TO REMAIN. (3) EXISTING RRU-11 UNITS TO BE RELOCATED TO POS. 1. (3) EXISTING RRUS-11 UNITS W/(3) A2 MODULES TO BE REMOVED. INSTALL (3) NEW RRUS-32 B2 UNITS. INSTALL (3) NEW RRUS-12 UNITS.

POS.3: VACANT

POS.4: (3) EXISTING PANEL ANTENNAS TO BE REMOVED. INSTALL (3) NEW COMMSCOPE NNH4-65B-R6 ANTENNAS. (6) EXISTING TMA UNIS TO REMAIN. INSTALL (3) NEW RRUs4478 UNITS.

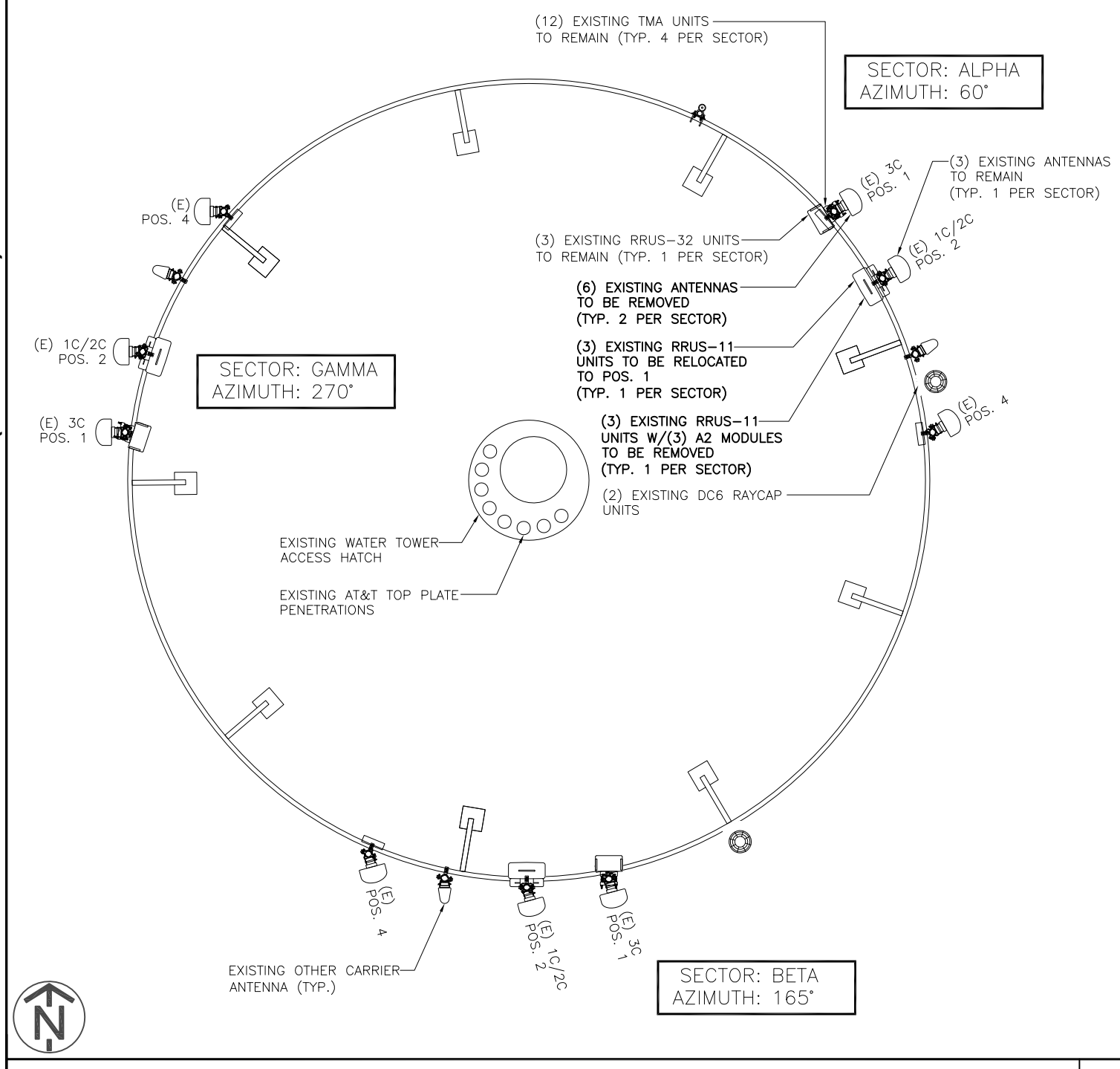

EXISTING ANTENNA PLAN — SCALE: 3/16" = 1'-0" (0 1' 2' 4' 8') — 1

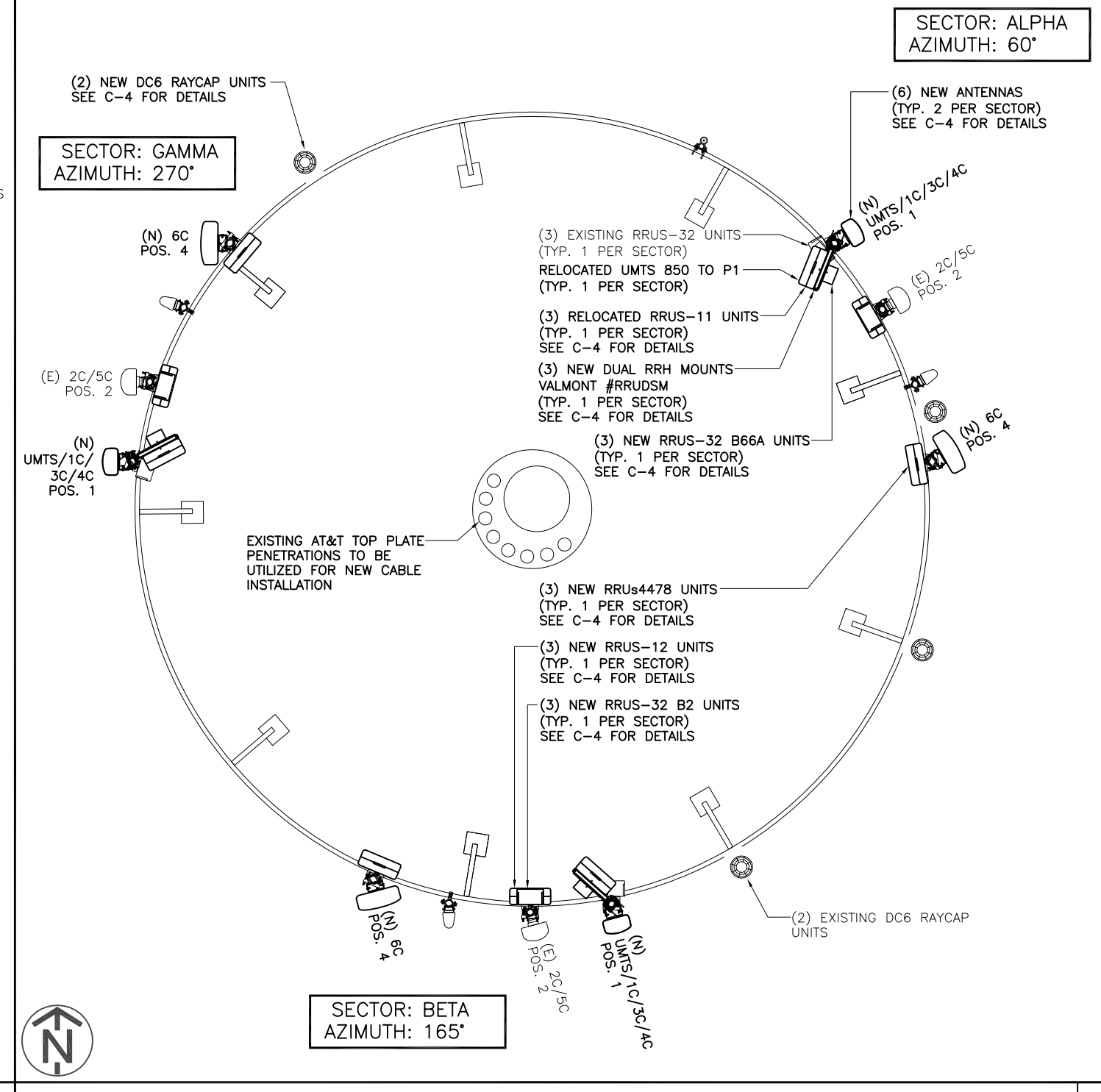

NEW ANTENNA PLAN — SCALE: 3/16" = 1'-0" (0 1' 2' 4' 8') — 2

FULLERTON ENGINEERING·DESIGN
1100 E. WOODFIELD ROAD, SUITE 500
SCHAUMBURG, ILLINOIS 60173
TEL: 847-908-8400
COA# 3620-11
www.FullertonEngineering.com

SBC WIRELESS
540 W. MADISON ST.
17TH FLOOR
CHICAGO, IL 60661

AT&T
930 NATIONAL PARKWAY
4th FLOOR
SCHAUMBURG, IL 60173

WI2022
10080264

PRAIRIE ROAD WT

2829 PRAIRIE ROAD
MADISON, WI 53719

#	DATE	REVISION	BY	CHK.
0	11/16/17	FINAL	LA	HA
B	10/18/17	100% REVIEW	LA	HA
A	10/9/17	90% REVIEW	LA	HA

SCALE: AS SHOWN — APP'D BY: DS

WISCONSIN DANIEL W. SMITH 44096-6 SCHAUMBURG, IL PROFESSIONAL ENGINEER

DRAWING NAME: ANTENNA PLAN

DRAWING NO.: C-3

PROJECT# 2017.0279.0063

EXHIBIT C (Sheet 6 of 10)

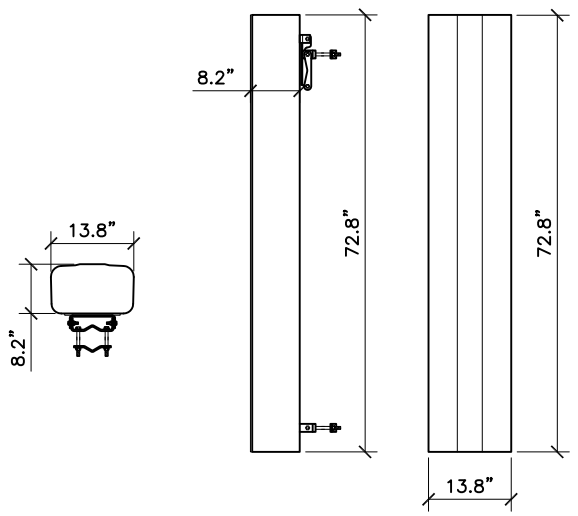

PLAN VIEW SIDE VIEW FRONT VIEW

COMMSCOPE – SBJAH4–ID65B–DL

ANDREW® MULTI–BAND ANTENNA WITH INTERNAL RETS AND LOW BANDS HAVE DIPLEXERS

FREQUENCY RANGE	698–787 MHz 824–894 MHz 1695–2360 MHz
ANTENNA (NET WEIGHT)	58.0 Lbs

ANTENNA SPEC SCALE: N.T.S. 1

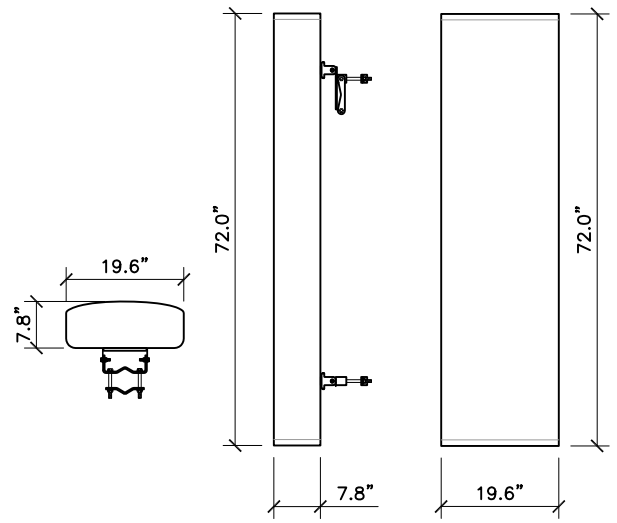

PLAN VIEW SIDE VIEW FRONT VIEW

COMMSCOPE – NNH4–65B–R6

MULTIBAND ANTENNA WITH 6x INTERNAL RET

FREQUENCY RANGE	2x 694–896 MHz 4x 1695–2360 MHz
ANTENNA	88.2 Lbs
BRACKET	10 Lbs
TOTAL WEIGHT	98.2 Lbs

RAYCAP SPEC SCALE: N.T.S. 2

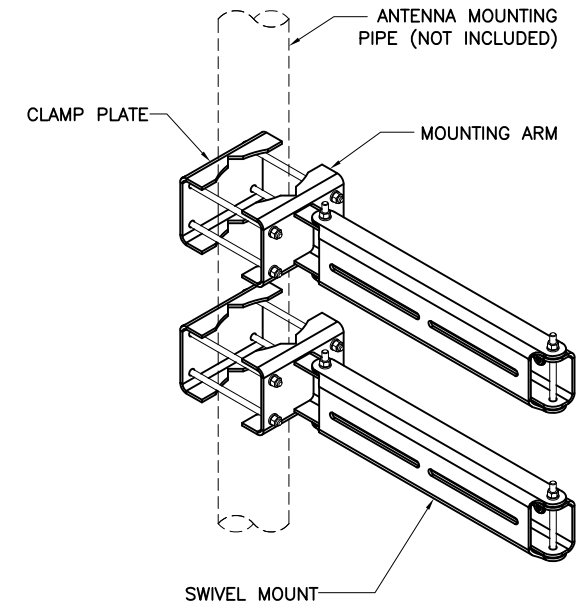

VALMONT – RRUDSM

RRU DUAL SWIVEL MOUNT

TOTAL WEIGHT = 39.4 LBS

RRU MOUNT DETAIL SCALE: N.T.S. 3

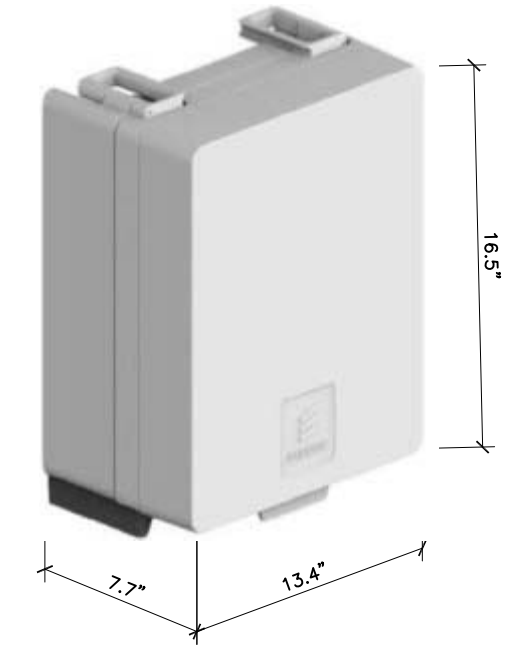

ERICSSON – RRUS 4478 B14

FREQUENCY RANGE	TX 758–768 MHz RX 788–798 MHz
TOTAL WEIGHT	59.9 Lbs

RRU SPEC SCALE: N.T.S. 4

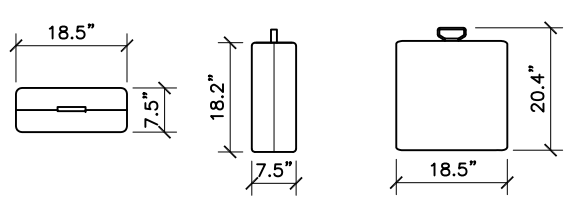

PLAN VIEW SIDE VIEW FRONT VIEW

ERICSSON – RRUS 12

WITH SOLAR SHIELD

UNIT WEIGHT 50.0 Lbs

RRU SPEC SCALE: N.T.S. 5

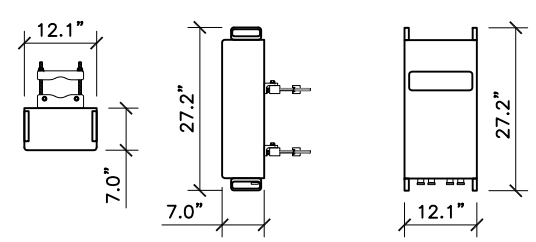

PLAN VIEW SIDE VIEW FRONT VIEW

ERICSSON – RRUS 32 B2

UNIT WEIGHT 53 Lbs

RRU SPEC SCALE: N.T.S. 6

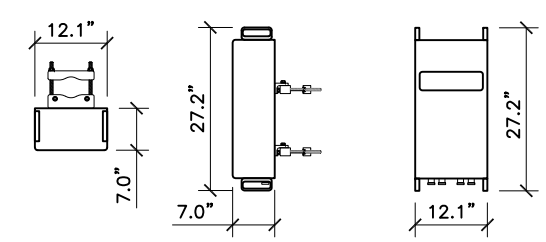

PLAN VIEW SIDE VIEW FRONT VIEW

ERICSSON – RRUS 32 B66

UNIT WEIGHT 60 Lbs

RRU SPEC SCALE: N.T.S. 7

NOT USED SCALE: N.T.S. 8

FULLERTON ENGINEERING·DESIGN

1100 E. WOODFIELD ROAD, SUITE 500
SCHAUMBURG, ILLINOIS 60173
TEL: 847-908-8400
COA# 3620-11
www.FullertonEngineering.com

S&C WIRELESS
540 W. MADISON ST.
17TH FLOOR
CHICAGO, IL 60661

AT&T
930 NATIONAL PARKWAY
4th FLOOR
SCHAUMBURG, IL 60173

WI2022
10080264

PRAIRIE ROAD WT

2829 PRAIRIE ROAD
MADISON, WI 53719

#	DATE	REVISION	BY	CHK.
0	11/16/17	FINAL	LA	HA
B	10/18/17	100% REVIEW	LA	HA
A	10/9/17	90% REVIEW	LA	HA

SCALE: AS SHOWN APP'D BY: DS

WISCONSIN
DANIEL W. SMITH
44096-6
SCHAUMBURG, IL
PROFESSIONAL ENGINEER

DRAWING NAME: EQUIPMENT DETAILS

DRAWING NO.: C–4

PROJECT# 2017.0279.0063

EXHIBIT C (Sheet 7 of 10)

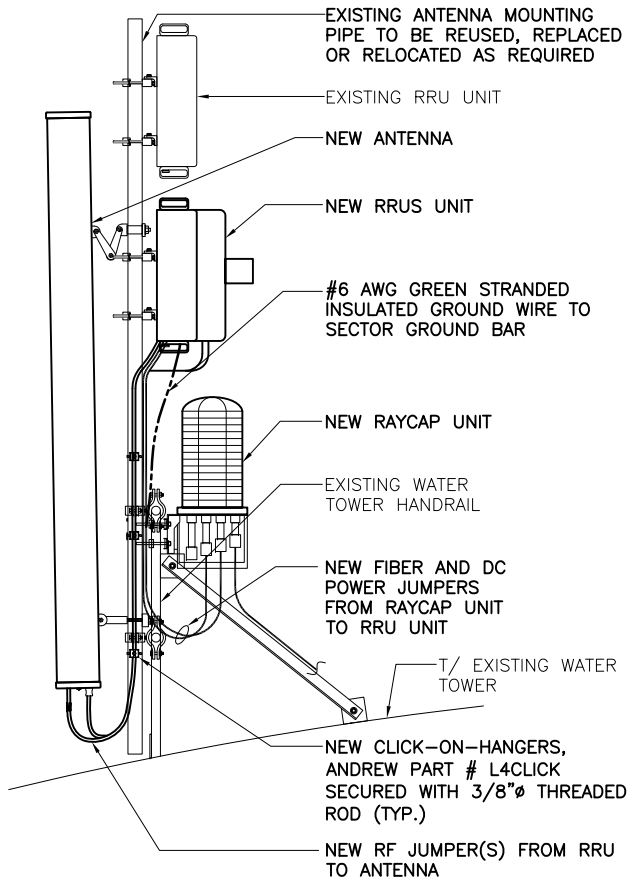

ANTENNA SCHEMATIC SCALE: N.T.S. 1

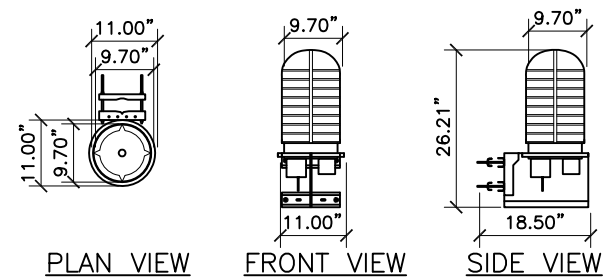

RAYCAP – DC6-48-60-18-8C

TOWER DC OVER VOLTAGE PROTECTION POWER CONNECTION SOLUTION

UNIT WEIGHT 32.8 Lbs

DC6 RAYCAP SPEC SCALE: N.T.S. 2

HEALTH AND SAFETY

1. CONTRACTOR SHALL PROVIDE ALL SAFETY EQUIPMENT AND FALL PROTECTION TO INSURE THE SAFETY OF ON SITE PERSONNEL DURING CONSTRUCTION.
2. ACCESS TO THE TANK INTERIOR WATER COMPARTMENT SHALL NOT BE PERMITTED WITHOUT THE APPROVAL OF THE WATER DEPARTMENT SUPERVISOR. PRECAUTIONS SHALL BE TAKEN TO PREVENT WATER CONTAMINATION.
3. THE PAINT SYSTEM SHALL BE CHECKED FOR HAZARDOUS METALS. WHERE HAZARDOUS METALS ARE FOUND IN THE PAINT SYSTEM, THE ENVIRONMENT AND WORKERS MUST BE PROTECTED FROM CONTAMINATION.

GENERAL WELDING

1. ALL WELDING SHALL BE IN ACCORDANCE WITH AWWA D100 SEC. 8, WELDING, SEC. 10, ERECTION AND SEC. 11, INSPECTION AND TESTING.
2. ALL WELDS TO THE TANK SURFACE SHALL BE MADE WITH E7018 LOW HYDROGEN ROD AND SHALL BE SMOOTH AND FREE OF BURRS AND UNDERCUTS. UNACCEPTABLE WELDS SHALL BE REPAIRED AS REQUIRED TO MEET AWWA D100 REQUIREMENTS.
3. NO WELDING SHALL BE DONE WHEN THE AMBIENT TEMPERATURE IS BELOW 32 DEGREE FAHRENHEIT UNLESS THE REQUIREMENTS OF AWWA D100, SEC 10.2.1 ARE FOLLOWED.
4. WELDING MAY CAUSE BLISTERING OF THE INTERIOR PAINT OPPOSITE THE WELD. DAMAGED PAINT SURFACES SHOULD BE REPAIRED PER WATER TANK OWNER SPECIFICATIONS. CONTRACTOR SHALL COORDINATE ALL PAINT MATERIALS & METHODS WITH OWNER PRIOR TO WORK BEING DONE.
5. GALVANIZED COMPONENTS SHALL NOT BE WELDED DIRECTLY TO THE TANK SURFACE.
6. ALL WELDS IN THE TANK AND STRUCTURAL ATTACHMENTS SHALL BE MADE IN A MANNER TO ENSURE COMPLETE FUSION WITH THE BASE METAL, WITHIN THE LIMITS SPECIFIED FOR EACH JOINT, AND IN STRICT ACCORDANCE WITH THE QUALIFIED WELDING PROCEDURE SPECIFICATIONS.
7. ALL WELDS FOR ANTENNA INSTALLATION SHALL BE SEAL WELDS.
8. CONTRACTOR SHALL REPAIR ALL DAMAGED PAINT AREAS OF TANK DUE TO CUTTING, WELDING AND GRINDING, DUE TO THE GENERATION OF METAL FILINGS WHICH WILL RUST STAIN THE TANK SURFACES IF NOT CLEANED OFF IN A TIMELY MANNER. CONTRACTOR SHALL REMOVE ALL METAL FILINGS IMMEDIATELY . DAMAGED PAINT SURFACES SHOULD BE REPAIRED PER WATER TANK OWNER SPECIFICATIONS. CONTRACTOR SHALL COORDINATE ALL PAINT MATERIALS & METHODS WITH TANK OWNER PRIOR TO WORK BEING DONE.

NOTES

1. ALL STEEL ANTENNA INSTALLATION COMPONENTS MUST BE PAINTED TO MATCH EXISTING PAINT SYSTEMS ON THE EXTERIOR AND DRY INTERIOR.
2. NO COMPONENTS CAN REMAIN GALVANIZED OR STAINLESS STEEL. THE SPECIFIED PAINT SYSTEMS WILL NOT HAVE GOOD ADHESION ON GALVANIZED OR STAINLESS STEEL SURFACES.
3. CONTACT TNEMEC TO OBTAIN A SUITABLE SURFACE PREPARATION SYSTEM FOR GALVANIZED AND STAINLESS STEEL SURFACES. THE SYSTEM MUST MAKE PREVIOUSLY GALVANIZED AND STAINLESS STEEL SURFACES COMPATIBLE WITH THE SPECIFIED PAINT SYSTEMS THAT WILL BE APPLIED.
4. IF APPLICABLE, PAINT ALL NEW STEEL IN A SHOP SETTING, PRIOR TO DELIVERY TO THE SITE.
5. WELDING ON ONE SIDE OF A STEEL SHEET MAY RESULT IN BURNED PAINT ON THE OPPOSITE SIDE. IF THIS OCCURS, THE BURNED PAINT ON THE OPPOSITE SIDE WILL NEED TO BE PAINT REPAIRED.
6. FOLLOW ALL PAINT MANUFACTURERS' RECOMMENDATIONS WHEN USING THEIR PRODUCTS.
7. FILL THE WATER TOWER TO OVERFLOW (DO NOT CLOG THE OVERFLOW PIPE TO ATTAIN GREATER HEIGHTS)
8. INSTALL A RAFT THAT IS SPECIFICALLY USED ONLY FOR PORTABLE DRINKING WATER TANKS. CHLORINATE THE PARTS OF THE RAFT THAT WILL BE IN CONTACT WITH THE TOWER.
9. CHLORINATE THE TANK PER AWWA C6562 "DISINFECTION OF WATER STORAGE FACILITIES"

GENERAL PAINT NOTES

SURFACE PREPARATION (EXTERIOR):

1. ABRASIVE BLAST CLEAN ALL NEW STEEL COMPONENTS TO AN SSPC-SP6 "COMMERCIAL BLAST CLEANING" CONDITION PRIOR TO APPLICATION OF PRIMER COAT.

2. AFTER WELDING OR CUTTING, CLEAN ALL DAMAGED SURFACES IN ACCORDANCE WITH SSPC-SP3 "POWER TOOL CLEANING" CONDITION PRIOR TO APPLICATION OF PRIME COAT.

COATING (EXTERIOR):

1. THE EXTERIOR PAINT REPAIR SYSTEM WILL BE ONE PRIME COAT OF TNEMEC SERIES 20 OR SERIES 66, ONE INTERMEDIATE COAT OF TNEMEC SERIES 20 OR SERIES 66, AND ONE TOPCOAT OF TNEMEC SERIES 1074. PAINT THE EXTERIOR TO MATCH THE EXISTING TOPCOAT COLOR.

2. THE THREE-COAT SYSTEM WILL BE APPLIED AT 3.0 – 4.0 MILS PER COAT, TO A THICKNESS OF 9.0 – 12.0 MILS.

NOTES:

1. ALL STEEL ANTENNA INSTALLATION COMPONENTS MUST BE PAINTED TO MATCH THE EXISTING PAINT SYSTEMS ON THE EXTERIOR.

2. NO COMPONENTS CAN REMAIN GALVANIZED OR STAINLESS STEEL. THE SPECIFIED PAINT SYSTEMS WILLNOT HAVE GOOD ADHESION ON GALVANIZED OR STAINLESS STEEL SURFACES.

3. CONTACT TNEMEC TO OBTAIN A SUITABLE SURFACE PREPARATION SYSTEM FOR GALVANIZED AND STAINLESS STEEL SURFACES. THE SYSTEM MUST MAKE PREVIOUSLY GALVANIZED AND STAINLESS STEEL SURFACES COMPATIBLE WITH THE SPECIFIED PAINT SYSTEMS THAT WILL BE APPLIED.

4. IF APPLICABLE, PAINT ALL NEW STEEL IN A SHOP SETTING, PRIOR TO DELIVERY TO THE SITE.

5. WELDING ON ONE SIDE OF A STEEL SHEET MAY RESULT IN BURNED PAINT ON THE OPPOSITE SIDE. IF THIS OCCURS, THE BURNED PAINT ON THE OPPOSITE SIDE WILL NEED TO BE PAINT REPAIRED.

6. FOLLOW ALL PAINT MANUFACTURERS' RECOMMENDATIONS WHEN USING THEIR PRODUCTS.

NOT USED SCALE: N.T.S. 3

NOT USED SCALE: N.T.S. 4

NOTES SCALE: N.T.S. 5

FULLERTON ENGINEERING·DESIGN
1100 E. WOODFIELD ROAD, SUITE 500
SCHAUMBURG, ILLINOIS 60173
TEL: 847-908-8400
COA# 3620-11
www.FullertonEngineering.com

SBC WIRELESS
540 W. MADISON ST.
17TH FLOOR
CHICAGO, IL 60661

AT&T
930 NATIONAL PARKWAY
4th FLOOR
SCHAUMBURG, IL 60173

WI2022
10080264

PRAIRIE ROAD WT

2829 PRAIRIE ROAD
MADISON, WI 53719

#	DATE	REVISION	BY	CHK.
0	11/16/17	FINAL	LA	HA
B	10/18/17	100% REVIEW	LA	HA
A	10/9/17	90% REVIEW	LA	HA

SCALE: AS SHOWN APP'D BY: DS

WISCONSIN DANIEL W. SMITH 44096-6 SCHAUMBURG, IL PROFESSIONAL ENGINEER

DRAWING NAME: EQUIPMENT DETAILS AND NOTES

DRAWING NO. C-4A

PROJECT# 2017.0279.0063

EXHIBIT C (Sheet 8 of 10)

SECTOR	ANTENNA NUMBER	ANTENNA STATUS & TYPE	ANTENNA MODEL NUMBER	ANTENNA VENDOR	TMA/RRU UNIT	AZIMUTH	ANTENNA CL FROM GROUND	CABLE FEEDER TYPE	CABLE FEEDER LENGTH	RAYCAP UNIT
ALPHA	A-1	(N) UMTS/1C/ 3C/4C POS. 1	SBJAH4-1D65B-DL	COMMSCOPE	(2) EXISTING TMA UNITS (1) EXISTING RRUS-32 UNIT (1) RELOCATED RRUS-11 UNIT (1) NEW RRUS-32 B66A UNIT (1) RELOCATED UMTS 850	60°	129'-0"	(2) 1-5/8"ø LDF7-50A	210'-0"	(1) (N) DC6-48-60-18-8C UNIT (SECTOR ALPHA) (1) (N) DC6-48-60-18-8C UNIT (SECTOR GAMMA) (1) (E) DC6-48-60-18-8F UNIT (1) (E) DC6-48-60-0-8C UNIT
								(2) EXISTING DC POWER CABLES	210'-0"	
								SEE ANTENNA A-2 FOR FIBER CABLE LENGTH		
	A-2	(E) 2C/5C ANTENNA	SBNHH-1D65C	COMMSCOPE	(1) NEW RRUS-12 UNIT (1) NEW RRUS-32 B2 UNIT	60°	129'-0"	(1) EXISTING FIBER CABLE	210'-0"	
								(2) EXISTING DC POWER CABLES	210'-0"	
								(1) NEW FIBER CABLE (1) ALARM CABLE	210'-0"	
								(2) NEW DC POWER CABLES	210'-0"	
	A-3	-	-	-	-	-	-	-		
	A-4	(N) 6C	NH4-65B-R6	COMMSCOPE	(2) EXISTING TMA UNITS (1) NEW RRUs4478 UNIT	60°	129'-0"	(2) 1-5/8"ø LDF7-50A	210'-0"	
								SEE ANTENNA A-2 FOR CABLE TYPE AND LENGTH		
BETA	B-1	(N) UMTS/1C/ 3C/4C POS. 1	SBJAH4-1D65B-DL	COMMSCOPE	(2) EXISTING TMA UNITS (1) EXISTING RRUS-32 UNIT (1) RELOCATED RRUS-11 UNIT (1) NEW RRUS-32 B66A UNIT (1) RELOCATED UMTS 850	165°	129'-0"	(2) 1-5/8"ø LDF7-50A	210'-0"	
								SEE ANTENNA A-1 FOR DC POWER CABLE LENGTH		
								SEE ANTENNA A-2 FOR FIBER CABLE LENGTH		
	B-2	(E) 2C/5C ANTENNA	SBNHH-1D65C	COMMSCOPE	(1) NEW RRUS-12 UNIT (1) NEW RRUS-32 B2 UNIT	165°	129'-0"	SEE ANTENNA A-2 FOR CABLE LENGTH AND TYPE		
	B-3	-	-	-	-	-	-	-		
	B-4	(N) 6C	NH4-65B-R6	COMMSCOPE	(2) EXISTING TMA UNITS (1) NEW RRUs4478 UNIT	165°	129'-0"	(2) 1-5/8"ø LDF7-50A	210'-0"	
								SEE ANTENNA A-2 FOR CABLE TYPE AND LENGTH		
GAMMA	C-1	(N) UMTS/1C/ 3C/4C POS. 1	SBJAH4-1D65B-DL	COMMSCOPE	(2) EXISTING TMA UNITS (1) EXISTING RRUS-32 UNIT (1) RELOCATED RRUS-11 UNIT (1) NEW RRUS-32 B66A UNIT (1) RELOCATED UMTS 850	165°	129'-0"	(2) 1-5/8"ø LDF7-50A	210'-0"	
								(1) NEW FIBER CABLE (1) ALARM CABLE	210'-0"	
								(2) NEW DC POWER CABLES	210'-0"	
	C-2	(E) 2C/5C ANTENNA	SBNHH-1D65C	COMMSCOPE	(1) NEW RRUS-12 UNIT (1) NEW RRUS-32 B2 UNIT	165°	129'-0"	SEE ANTENNA C-1 FOR CABLE LENGTH AND TYPE		
	C-3	-	-	-	-	-	-	-		
	C-4	(N) 6C	NH4-65B-R6	COMMSCOPE	(2) EXISTING TMA UNITS (1) NEW RRUs4478 UNIT	165°	129'-0"	(2) 1-5/8"ø LDF7-50A	210'-0"	
								SEE ANTENNA C-1 FOR CABLE TYPE AND LENGTH		

NEW CABLE LENGTH SHOULD INCLUDE SAFETY FACTOR OF 20 FT. (10 FT. AT BOTH ENDS OF CABLE RUN)
CONTRACTOR TO VERIFY RF DATA WITH AT&T WIRELESS CONSTRUCTION MANAGER AND/OR RF ENGINEER PRIOR TO INSTALLATION

EQUIPMENT DESCRIPTION TABLE

SCALE: N.T.S. | 1

FULLERTON ENGINEERING·DESIGN
1100 E. WOODFIELD ROAD, SUITE 500
SCHAUMBURG, ILLINOIS 60173
TEL: 847-908-8400
COA# 3620-11
www.FullertonEngineering.com

SAC WIRELESS
540 W. MADISON ST.
17TH FLOOR
CHICAGO, IL 60661

AT&T
930 NATIONAL PARKWAY
4th FLOOR
SCHAUMBURG, IL 60173

WI2022
10080264

PRAIRIE ROAD WT

2829 PRAIRIE ROAD
MADISON, WI 53719

#	DATE	REVISION	BY	CHK.
0	11/16/17	FINAL	LA	HA
B	10/18/17	100% REVIEW	LA	HA
A	10/9/17	90% REVIEW	LA	HA

SCALE: AS SHOWN | APP'D BY: DS

WISCONSIN
DANIEL W. SMITH
44096-6
SCHAUMBURG, IL
PROFESSIONAL ENGINEER

DRAWING NAME: EQUIPMENT DESCRIPTION TABLE

DRAWING NO. C-5

PROJECT# 2017.0279.0063

EXHIBIT C (Sheet 9 of 10)

NOTES:

1. COORDINATE WITH CONSTRUCTION MANAGER FOR THE PROVISION OF DC CIRCUIT BREAKERS AND OTHER ANCILLARY ITEMS TO SUPPORT THE NEW EQUIPMENT
.
2. PROPERLY BOND ALL EQUIPMENT AND CONDUCTIVE SURFACES TO EXISTING GROUND PER NEC AND AT&T STANDARDS.

LEGEND:

1. (1) NEW 25A DC BREAKER PER RRU UNIT INSIDE EXISTING −48V DC POWER PLANT (TOTAL OF 7) ADD SAC LOWER FIBER

   (1) NEW 30A DC BREAKER PER RRU UNIT INSIDE EXISTING −48V DC POWER PLANT (TOTAL OF 6) ADD SAC LOWER FIBER INSTALL (2) RECTIFIERS

2. SWAP DUS FOR 5216. ADD 6601 RBS, (1) XMU

3. NOT USED

4. (4) NEW SETS OF 6−#8 AWG DC CONDUCTOR BUNDLES BETWEEN SURGE PROTECTION UNIT BY EQUIPMENT AND NEW RAYCAP UNIT MOUNTED NEAR ANTENNA

5. (2) NEW FIBER CABLE BETWEEN EXISTING DU AND NEW RAYCAP UNIT MOUNTED NEAR ANTENNA

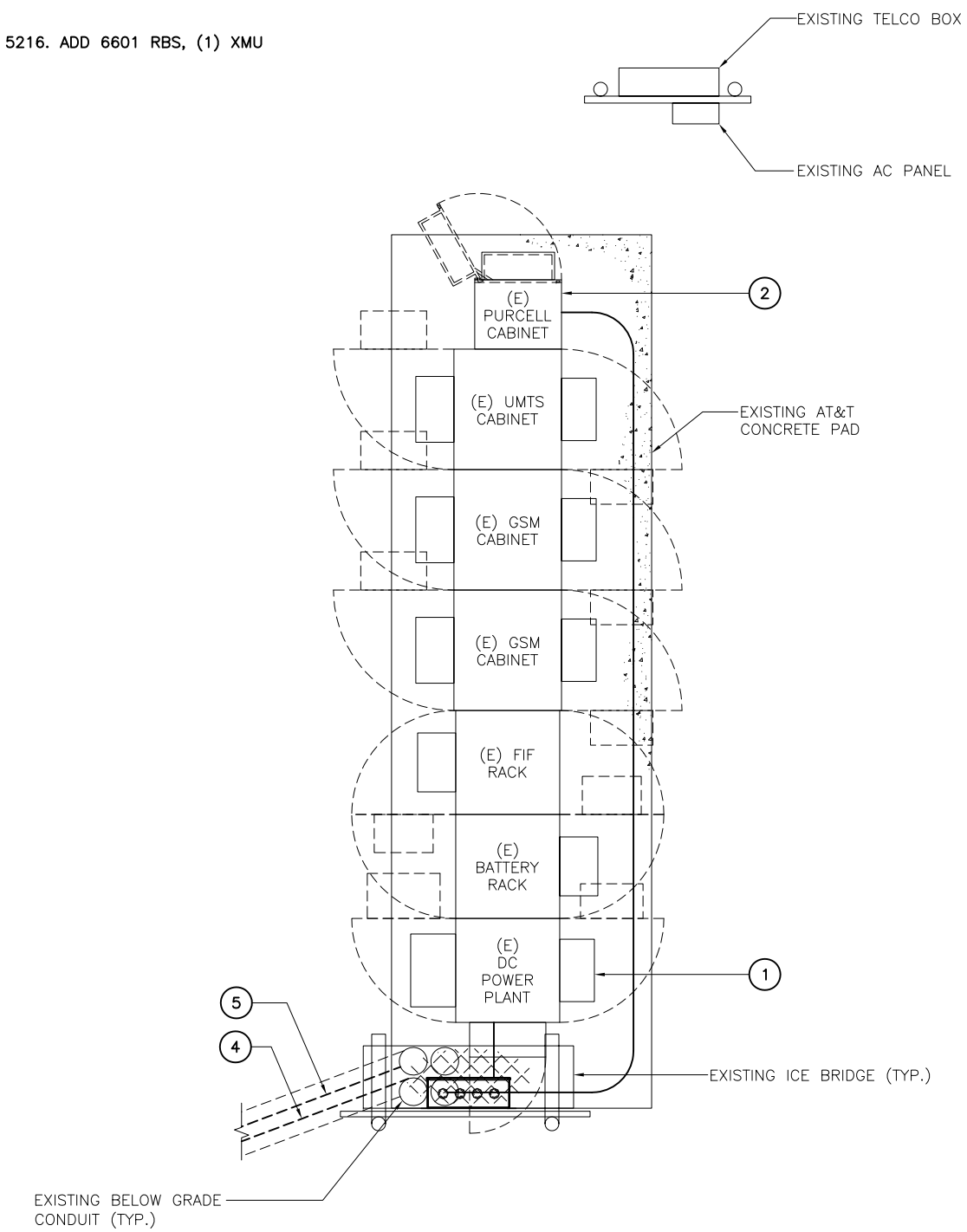

UTILITY PLAN

0 1' 2' 4' 6'

SCALE: 1/4" = 1'−0"

1

FULLERTON ENGINEERING·DESIGN
1100 E. WOODFIELD ROAD, SUITE 500
SCHAUMBURG, ILLINOIS 60173
TEL: 847-908-8400
COA# 3620-11
www.FullertonEngineering.com

SAC WIRELESS
540 W. MADISON ST.
17TH FLOOR
CHICAGO, IL 60661

AT&T
930 NATIONAL PARKWAY
4th FLOOR
SCHAUMBURG, IL 60173

WI2022
10080264

PRAIRIE ROAD WT

2829 PRAIRIE ROAD
MADISON, WI 53719

#	DATE	REVISION	BY	CHK.
0	11/16/17	FINAL	LA	HA
B	10/18/17	100% REVIEW	LA	HA
A	10/9/17	90% REVIEW	LA	HA

SCALE: AS SHOWN APP'D BY: DS

WISCONSIN
DANIEL W. SMITH
44096-6
SCHAUMBURG, IL
PROFESSIONAL ENGINEER

DRAWING NAME: UTILITY PLAN AND NOTES

DRAWING NO. E−1

PROJECT# 2017.0279.0063

EXHIBIT C (Sheet 10 of 10)

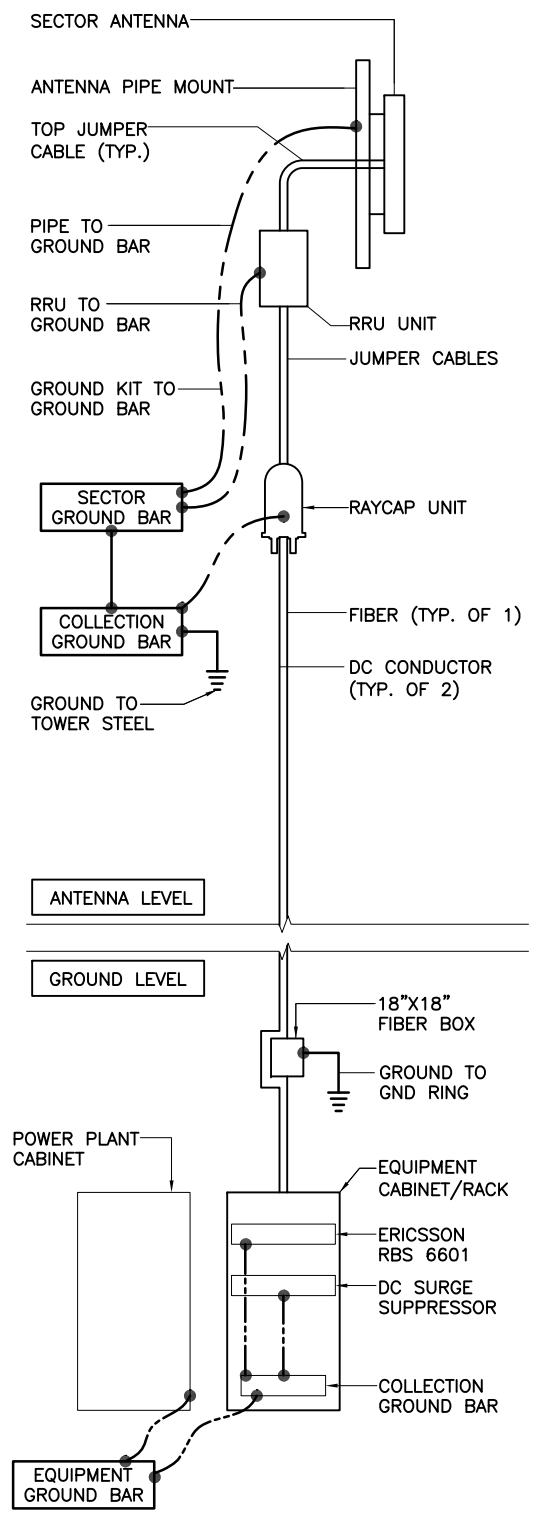

GROUNDING SCHEMATIC SCALE: N.T.S. 1

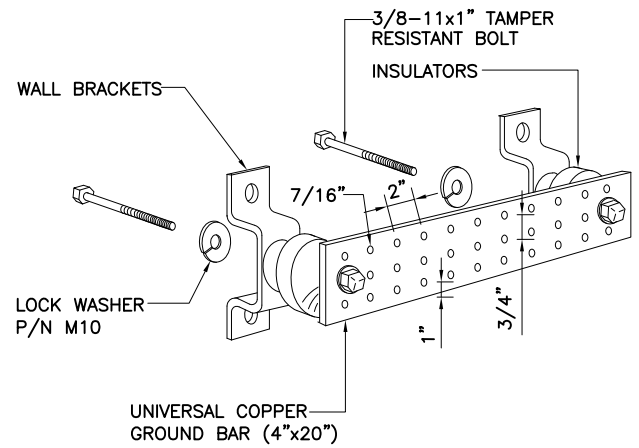

GROUND BAR DETAIL SCALE: N.T.S. 2

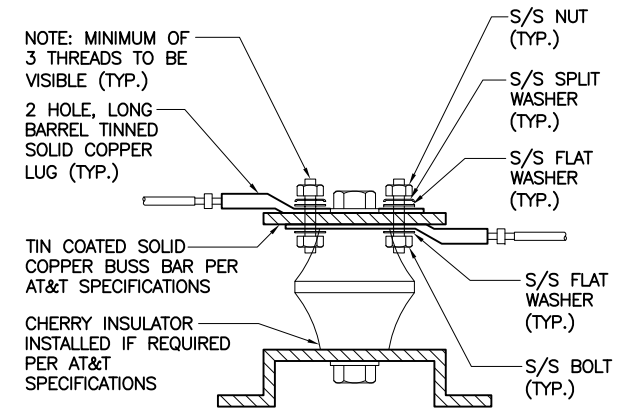

NOTES:

1. ALL HARDWARE 18-8 STAINLESS STEEL INCLUDING SPLIT WASHERS.
2. COAT WIRE END WITH ANTI-OXIDATION COMPOUND PRIOR TO INSERTION INTO LUG BARREL AND CRIMPING.
3. APPLY ANTI-OXIDATION COMPOUND BETWEEN ALL LUGS AND BUSS BARS PRIOR TO MATING AND BOLTING.

LUG DETAIL SCALE: N.T.S. 3

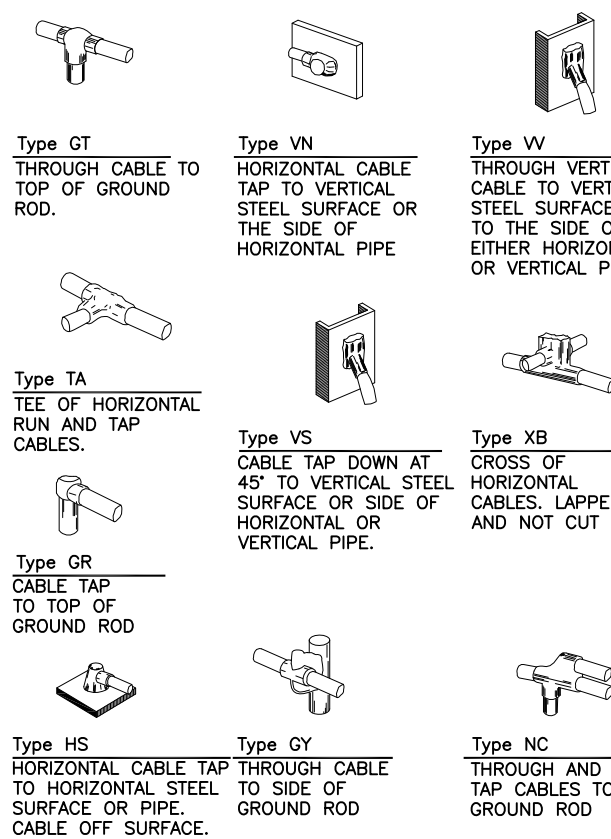

EXOTHERMIC WELD DETAILS SCALE: N.T.S. 4

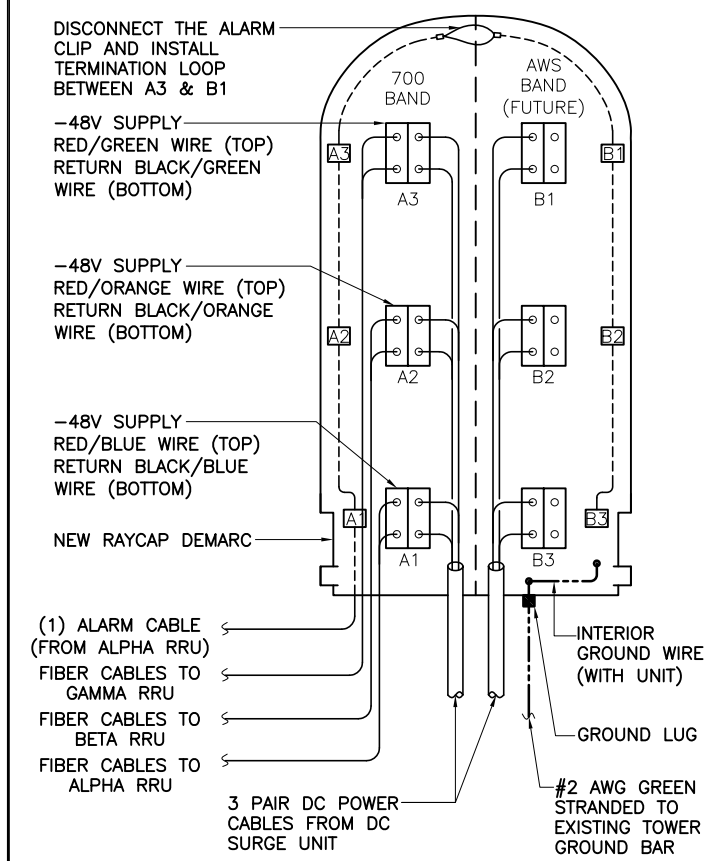

RAYCAP DC POWER AND ALARM DET. SCALE: N.T.S. 5

SCALE: N.T.S. 6

FULLERTON ENGINEERING·DESIGN
1100 E. WOODFIELD ROAD, SUITE 500
SCHAUMBURG, ILLINOIS 60173
TEL: 847-908-8400
COA# 3620-11
www.FullertonEngineering.com

SBC WIRELESS
540 W. MADISON ST.
17TH FLOOR
CHICAGO, IL 60661

AT&T
930 NATIONAL PARKWAY
4th FLOOR
SCHAUMBURG, IL 60173

WI2022
10080264

PRAIRIE ROAD WT

2829 PRAIRIE ROAD
MADISON, WI 53719

#	DATE	REVISION	BY	CHK.
0	11/16/17	FINAL	LA	HA
B	10/18/17	100% REVIEW	LA	HA
A	10/9/17	90% REVIEW	LA	HA

SCALE: AS SHOWN APP'D BY: DS

WISCONSIN DANIEL W. SMITH 44096-6 SCHAUMBURG, IL PROFESSIONAL ENGINEER

DRAWING NAME: GROUNDING DETAILS AND NOTES

DRAWING NO. E-2

PROJECT# 2017.0279.0063

EXHIBIT D

License Fee Schedule

	License Year	License Period	Base Antenna Fee*	Additional Equipment Occupancy Area (cu. ft.)**	Additional Fee (per cu. ft.)***	Total Additional Fee	TOTAL LICENSE FEE
Initial Term	1	07/01/2022 - 06/30/2023	$30,000.00	166.00	$25.00	$4,150.00	$34,150.00
	2	07/01/2023 - 06/30/2024	$30,900.00	166.00	$25.75	$4,274.50	$35,174.50
	3	07/01/2024 - 06/30/2025	$31,827.00	166.00	$26.52	$4,402.74	$36,229.74
	4	07/01/2025 - 06/30/2026	$32,781.81	166.00	$27.32	$4,534.82	$37,316.63
	5	07/01/2026 - 06/30/2027	$33,765.26	166.00	$28.14	$4,670.86	$38,436.13
First Renewal Term	6	07/01/2027 - 06/30/2028	$34,778.22	166.00	$28.98	$4,810.99	$39,589.21
	7	07/01/2028 - 06/30/2029	$35,821.57	166.00	$29.85	$4,955.32	$40,776.89
	8	07/01/2029 - 06/30/2030	$36,896.22	166.00	$30.75	$5,103.98	$42,000.19
	9	07/01/2030 - 06/30/2031	$38,003.10	166.00	$31.67	$5,257.10	$43,260.20
	10	07/01/2031 - 06/30/2032	$39,143.20	166.00	$32.62	$5,414.81	$44,558.00
Second Renewal Term	11	07/01/2032 - 06/30/2033	$40,317.49	166.00	$33.60	$5,577.25	$45,894.74
	12	07/01/2033 - 06/30/2034	$41,527.02	166.00	$34.61	$5,744.57	$47,271.59
	13	07/01/2034 - 06/30/2035	$42,772.83	166.00	$35.64	$5,916.91	$48,689.73
	14	07/01/2035 - 06/30/2036	$44,056.01	166.00	$36.71	$6,094.41	$50,150.43
	15	07/01/2036 - 06/30/2037	$45,377.69	166.00	$37.81	$6,277.25	$51,654.94
Third Renewal Term	16	07/01/2037 - 06/30/2038	$46,739.02	166.00	$38.95	$6,465.56	$53,204.59
	17	07/01/2038 - 06/30/2039	$48,141.19	166.00	$40.12	$6,659.53	$54,800.72
	18	07/01/2039 - 06/30/2040	$49,585.43	166.00	$41.32	$6,859.32	$56,444.75
	19	07/01/2040 - 06/30/2041	$51,072.99	166.00	$42.56	$7,065.10	$58,138.09
	20	07/01/2041 - 06/30/2042	$52,605.18	166.00	$43.84	$7,277.05	$59,882.23

*** Base Antenna Fee: Allows for attachment of up to 100 cu. ft. of Equipment; fee escalates 3%/yr.**
**** License Fee based on total Equipment Occupancy Area area of 266 cubic feet of air space.**
***** Additional Fee: Calculated on a per cu. ft. basis; fee escalates 3%/yr.**

EXHIBIT E

(page 1 of 2)

EQUIPMENT MODIFICATION REQUEST FORM

A. **GENERAL INFORMATION**

1. Date of Request: _____
2. Address: 2829 Prairie Road, Madison, WI 53719
3. City Real Estate Project No.: 7013
4. Licensee's Site Reference Name & Number: _____
5. Full corporate name of Licensee: _____
   a. Licensee's Corporate Designation: _____
   b. Licensee Address: _____
   _____
   c. Licensee Contact: _____
      i. Office Phone: _____
      ii. Mobile: _____
      iii. Email: _____

B. SCOPE OF WORK

1. Description of proposed work (Example: Install 3 new radio units, relocate 3 antennas, add 3 tower mounted amplifiers): _____
   _____
   _____
2. Proposed timeframe for installation activities
   a. Start date: _____
   b. Completion date: _____
3. Specific equipment to be used (e.g., man-lift, crane, etc.): _____
   _____
   _____
   _____
4. Specify any potential disturbance or damage to City property and indicate proposed restoration plan and timeline (e.g., landscape disturbance, fence disturbance, etc.): _____
   _____
   _____
   _____
5. (If needed, include additional information as attachment)

C. REQUIRED REPORTS AND STUDIES

The following documents must be submitted to the City along with this Equipment Modification Form:

1. Completed Equipment Inventory Form (attached)
2. Updated Structural Analysis
3. Updated Site Safety/RF Emissions Report
4. Updated Interference Study (if applicable)
5. Construction drawings/plans and specifications of the proposed work, stamped by a professional engineer licensed in the State of Wisconsin
6. Any other information relevant to the proposed equipment modification activities.

Forward completed form and required reports, etc. via e-mail to:

City of Madison – Office of Real Estate Services
Attention: Lance Vest, Real Estate Specialist 2
lvest@cityofmadison.com
Phone: 608-245-5794

EXHIBIT E

(page 2 of 2)

EQUIPMENT MODIFICATION REQUEST FORM (continued)
EQUIPMENT INVENTORY FORM

General Item Description (e.g., antenna, RRU, TMA, dish, etc.)	Model No.	# of Existing to Remain	# of Existing to be Removed	# of Existing to be Replaced	# of New Items