SITE KNOWN AS NORTHWEST 40.0 FEET OF LOT SEVEN (7), BLOCK TWO HUNDRED SIXTY-EIGHT (268), MADISON, ACCORDING TO THE RECORDED PLAT THEREOF, IN THE CITY OF MADISON, DANE COUNTY, WISCONSIN

GENERAL SITE SCOPE OF WORK

THIS PROJECT CONSISTS OF PARTIALLY DEMOLISHING A RESIDENTIAL STRUCTURE, RENOVATING THE REMAINING PORTION OF THE RESIDENTIAL STRUCTURE, AND CONSTRUCTING AN ADDITION TO THE RESIDENTIAL STRUCTURE.

THE SITE WORK INCLUDES THE FOLLOWING:

- ALL SITE CONCRETE TO BE REMOVED AND REPLACED
- PARTIAL DEMOLITION OF PRIMARY STRUCTURE
- REMOVAL OF EXISTING ACCESSORY STRUCTURES
- NEW ADDITION TO PRIMARY STRUCTURE
- NEW CONCRETE DRIVEWAY
- NEW PERMEABLE PAVER PATIO

DIGGERS HOTLINE

Toll Free (800) 242–8511
Milwaukee Area (414) 259-1181
Hearing Impaired TDD (800) 542-2289
www.DiggersHotline.com

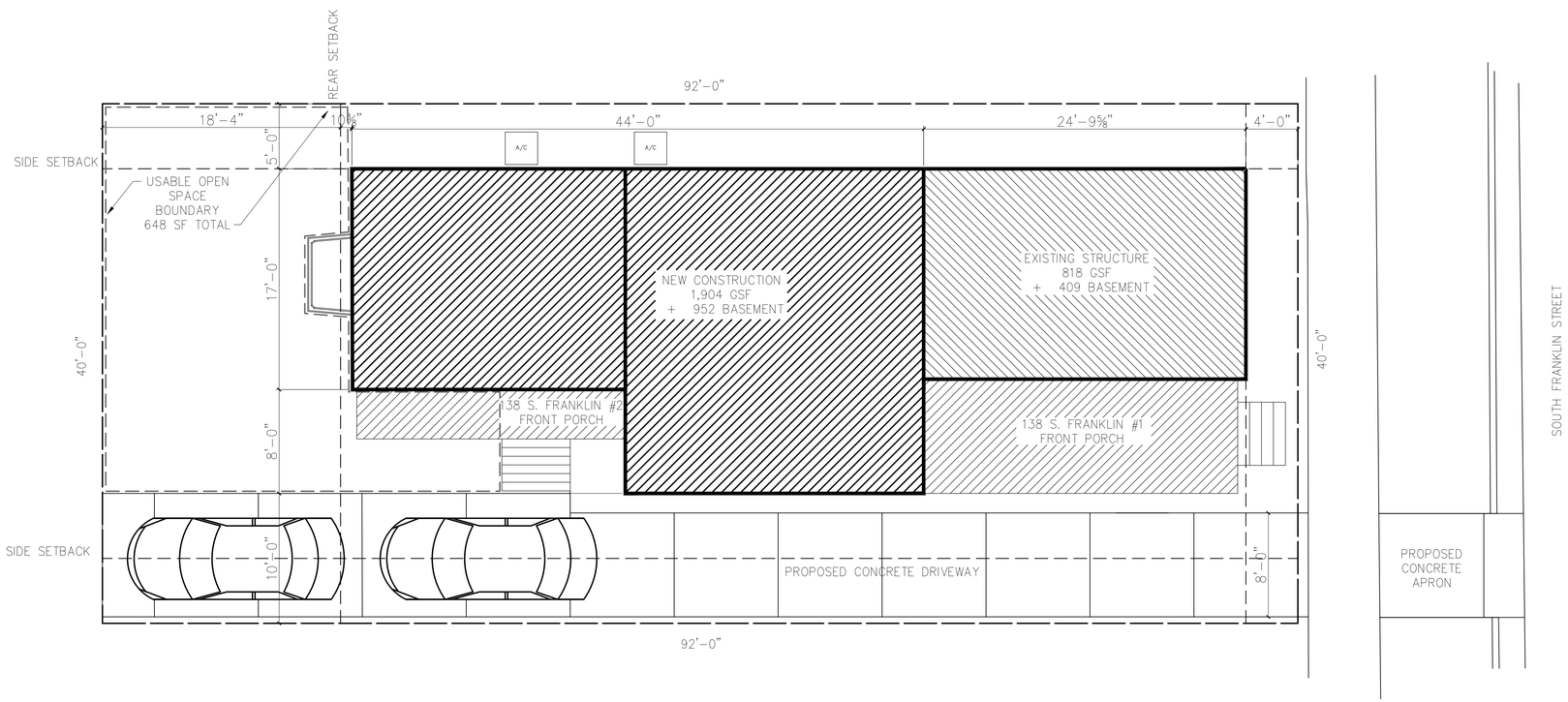

SITE PLAN
3/16" = 1'–0"
NORTH

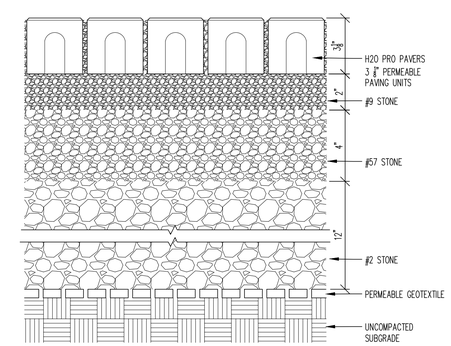

2 AS100 PERMEABLE PAVER SYSTEM
3" = 1'–0"

FRANKLIN STREET HOUSE

138 SOUTH FRANKLIN STREET
MADISON, WI 53703

	2016.05.16 LANDMARKS COMMISSION

Revisions

Issue Date:	2016.05.16
Project No.	x
Drawn:	DMK
Checked:	x
Approved:	x

Sheet Title

138 S. Franklin St.

SITE PLAN

Sheet No.
AS100

8/31/2016 2:09:22 PM

BUILDING & CODE INFO.

Building Height:	2 STORIES + BASEMENT
Occupancy:	EXISTING DRI
Building Codes:	2009 IBC
Gross Building Areas:	
	4,132 SF
	1,334 SF BASEMENT
	1,332 SF FIRST FLOOR
	98 SF FRONT PORCH
	36 SF BACK PORCH
	1,332 SF SECOND FLOOR
Site Area:	0.1 ACRES
Parking:	2 CAR PARKING PAD
Setbacks:	
FRONT:	AVG. OR <20'
SIDE:	5' MINIMUM
BACK:	18-4" MINIMUM
Height	35' MAX.
Wind Load:	20 PSF
Snow Load:	30 PSF
Live Loads:	
Floor	40 PSF
Garage Floor	50 PSF
Balcony, Deck, Porch	40 PSF
Ceiling w/ Storage	20 PSF

GENERAL SCOPE OF WORK

THIS PROJECT CONSISTS OF PARTIALLY DEMOLISHING A RESIDENTIAL STRUCTURE, RENOVATING THE REMAINING PORTION OF THE RESIDENTIAL STRUCTURE, AND CONSTRUCTING A NEW ADDITION TO THE RESIDENTIAL STRUCTURE.

THE WORK INCLUDES THE FOLLOWING:

- ASBESTOS, MOLD, AND LEAD BASED PAINT REMEDIATION
- SELECTIVE SITE DEMOLITION (PORCHES, DECKS)
- INTERIOR DEMOLITION AND RECONFIGURATION OF SOME NON-LOAD BEARING WALLS.
- ROUGH CARPENTRY FOR NEW INTERIOR AND EXTERIOR WALLS, GARAGES, PORCHES, DECKS, ETC.
- NEW PLUMBING SYSTEMS
- NEW MECHANICAL SYSTEMS
- REPLACE EXISTING ROOFING SYSTEMS
- REPLACE EXISTING WINDOWS
- REPLACE EXISTING SIDING
- REPLACE DAMAGED SITE CONCRETE
- NEW DRYWALL
- NEW FLOORING
- NEW FINISH CARPENTRY
- NEW PAINT
- NEW APPLIANCES, ETC.

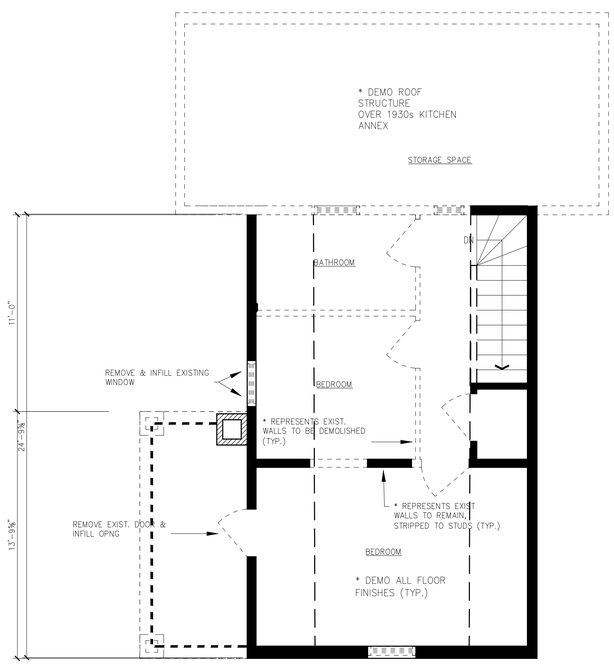

SECOND FLOOR PLAN
1/4" = 1'-0"

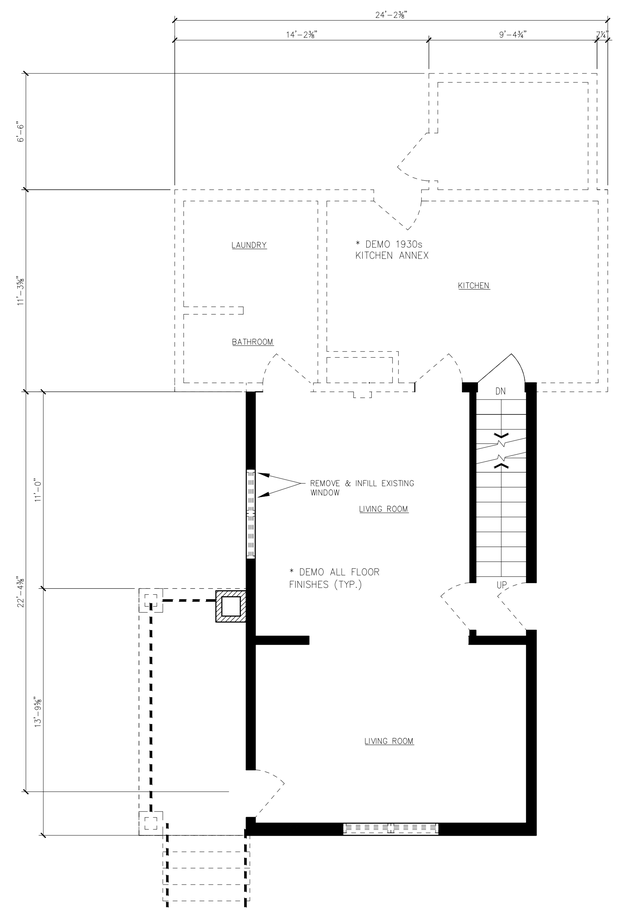

FIRST FLOOR PLAN
1/4" = 1'-0"

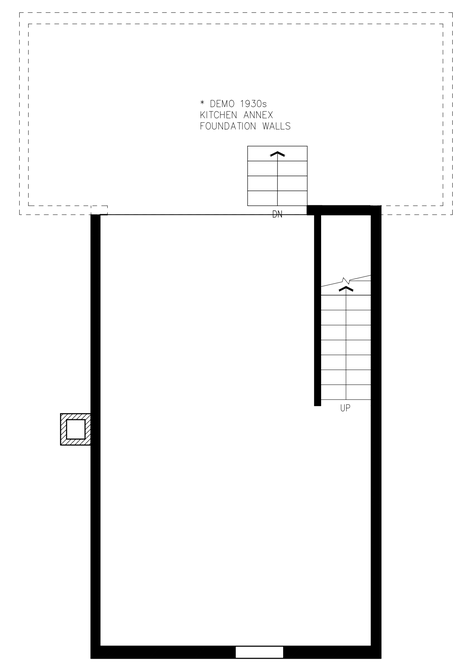

BASEMENT PLAN
1/4" = 1'-0"

FRANKLIN STREET HOUSE

138 SOUTH FRANKLIN STREET
MADISON, WI 53703

2016.05.16 LANDMARKS COMMISSION	

Revisions

Issue Date:	2016.05.16
Project No.	x
Drawn:	DMK
Checked:	x
Approved:	x

Sheet Title

138 S. Franklin St.

DEMOLITION PLANS

Sheet No.
A101

8/31/2016 2:09:23 PM

SMOKE & CARBON MONOXIDE ALARMS

- (SD) IONIZATION SMOKE DETECTOR HARDWIRED & INTERCONNECTED W/ BATTERY BACKUP
- (CO) COMBINATION CARBON MONOXIDE & IONIZATION SMOKE DETECTOR HARDWIRED & INTERCONNECTED W/ BATTERY BACKUP

PERSCRIPTIVE STRUCTURAL SIZING & SPACING (UDC TABLE 21.25-A)

	LATERALLY UNSUPPORTED STUD HEIGHT	MAX SPACING SUPPORTING ONE FLOOR, ROOF AND CEILING	MAX SPACING
2X6 EXTERIOR BEARING WALLS	10'	24" OC	NA
2X6 INTERIOR BEARING WALLS	10'	24" OC	NA
2X4 INTERIOR BEARING WALLS	10"	16" OC	NA
2X4 INTERIOR NONBEARING WALLS	20'	NA	24" OC

ALLOWABLE HEADER SPANS (UDC TABLE 21.25-D)

HEADER MEMBERS	MAX SPAN
(2) 2X6'S	2.5'
(2) 2X8'S	3'
(2) 2X10'S	4'
(2) 2X12'S	5'

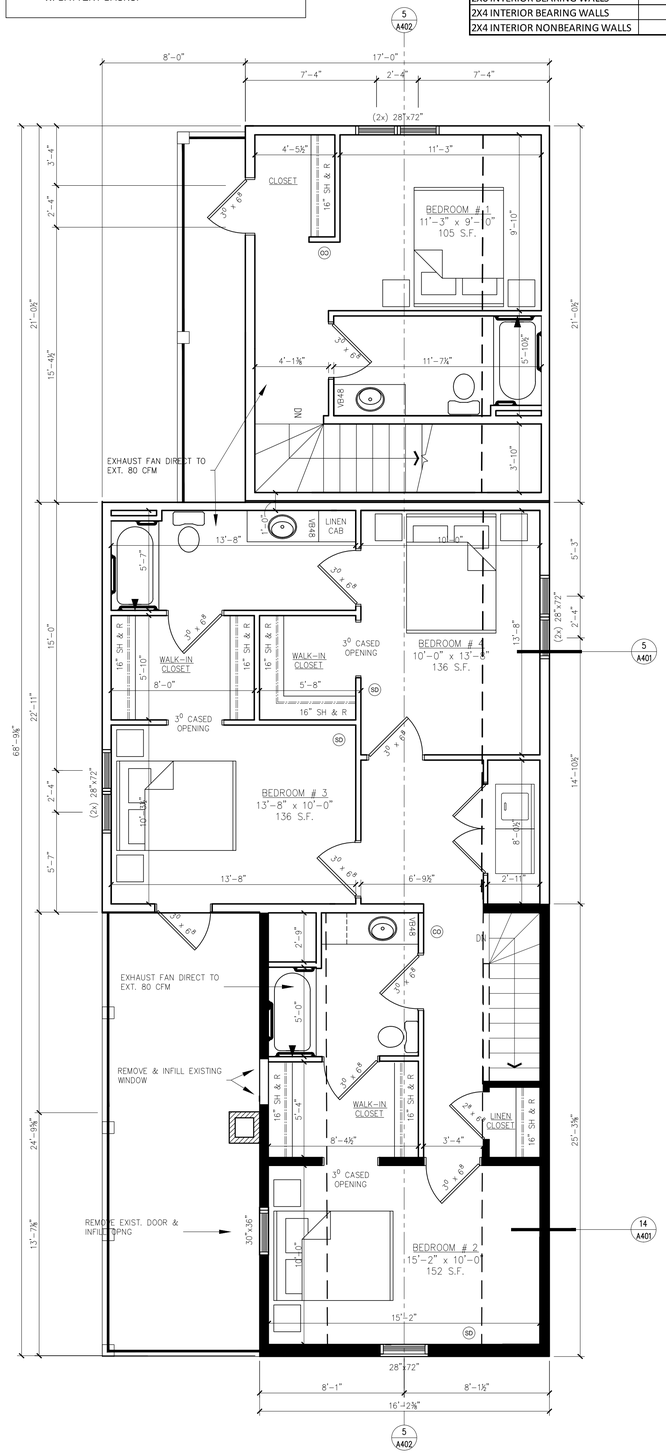

SECOND FLOOR PLAN
1/4" = 1'-0"

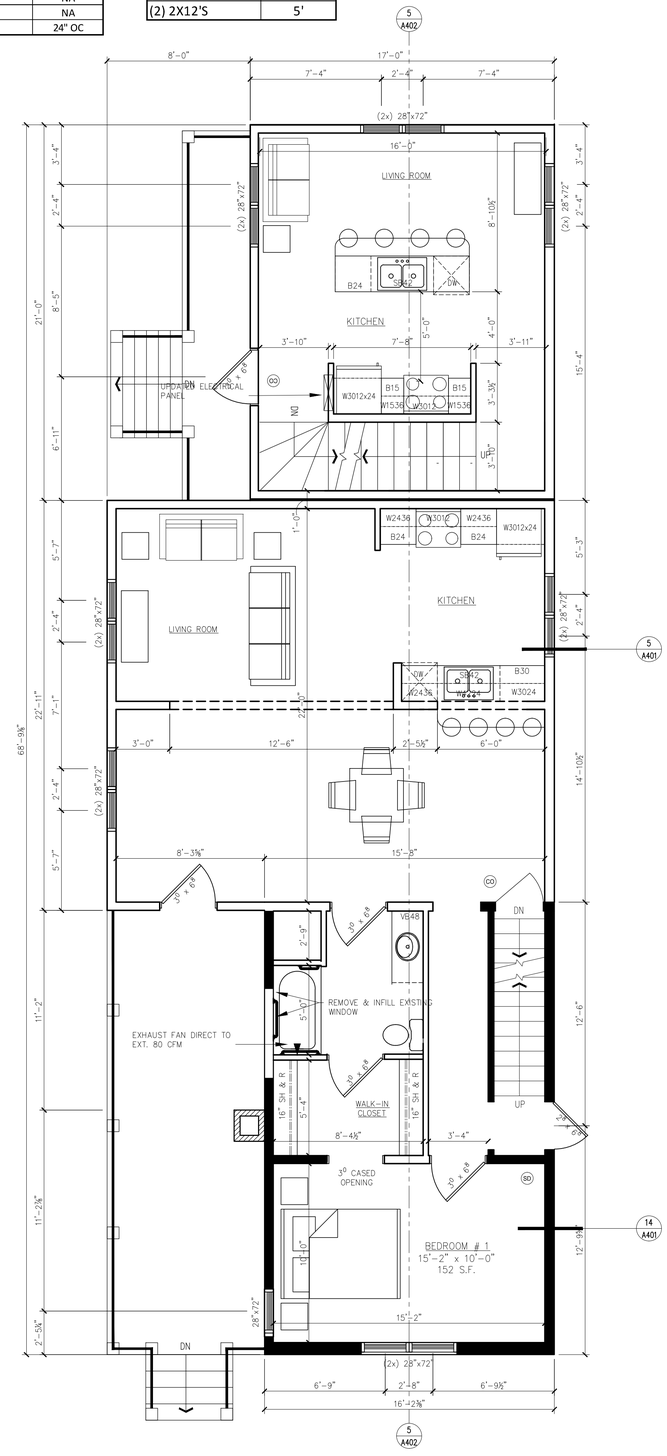

FIRST FLOOR PLAN
1/4" = 1'-0"

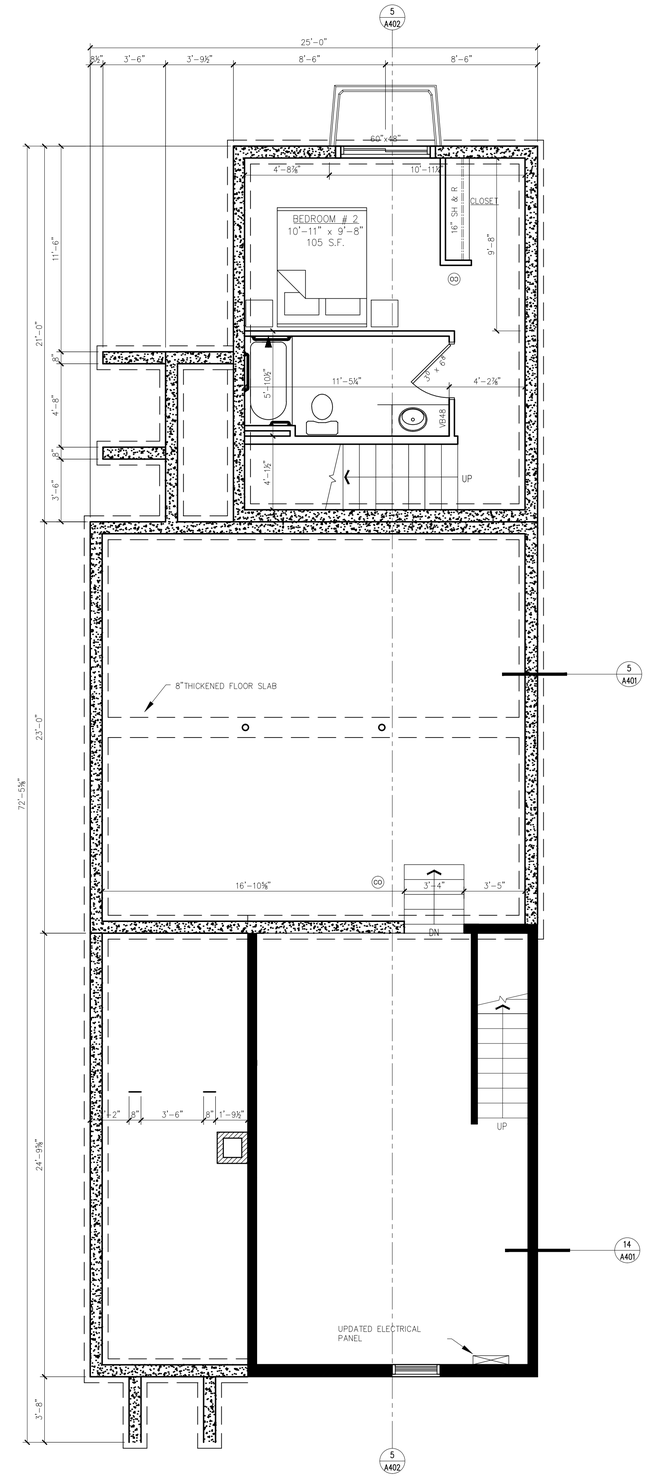

BASEMENT PLAN
1/4" = 1'-0"

FRANKLIN STREET HOUSE

138 SOUTH FRANKLIN STREET
MADISON, WI 53703

Revisions
2016.05.16 LANDMARKS COMMISSION

Issue Date:	2016.05.16
Project No.	x
Drawn:	DMK
Checked:	x
Approved:	x

Sheet Title

138 S. Franklin St.

FLOOR PLANS

Sheet No.

A201

8/31/2016 2:09:25 PM

NORTH SIDE ELEVATION

SCALE: 1/4" = 1'-0"

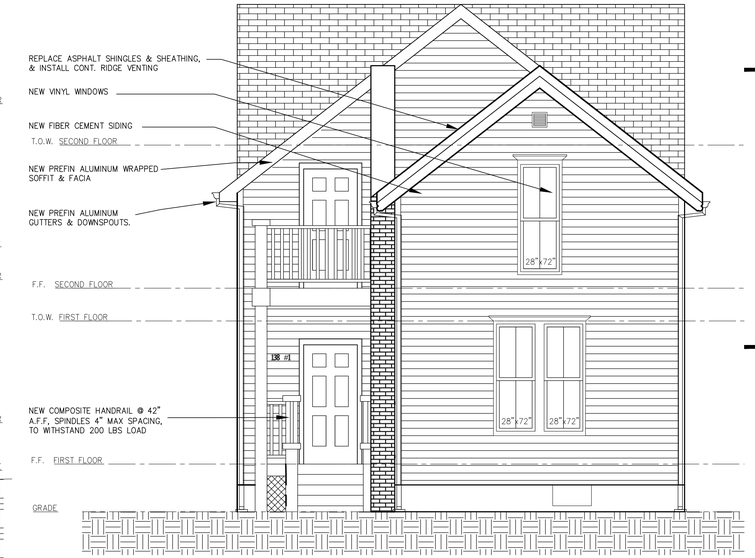

FRONT ELEVATION

SCALE: 1/4" = 1'-0"

* NOTES APPLY TO ALL ELEVATIONS

SOUTH SIDE ELEVATION

SCALE: 1/4" = 1'-0"

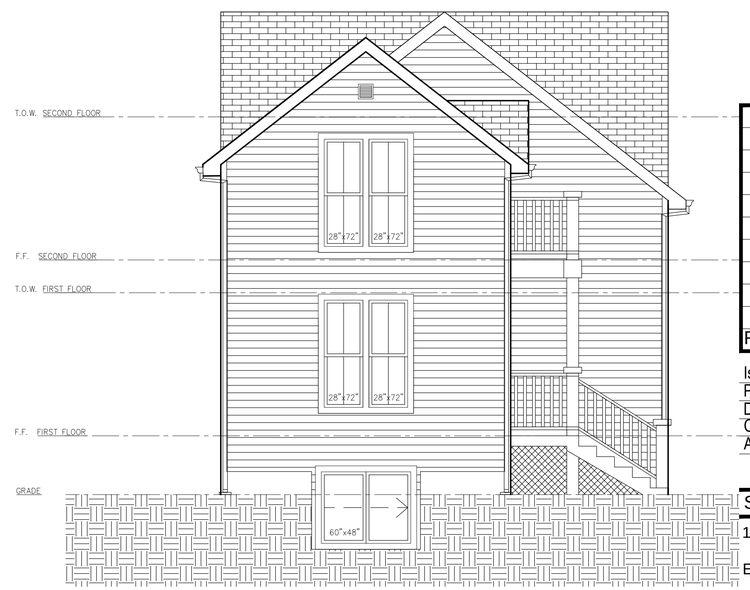

REAR ELEVATION

SCALE: 1/4" = 1'-0"

FRANKLIN STREET HOUSE

138 SOUTH FRANKLIN STREET
MADISON, WI 53703

Revisions	
2016.05.16	LANDMARKS COMMISSION

Issue Date:	2016.05.16
Project No.	x
Drawn:	DMK
Checked:	x
Approved:	x

Sheet Title

138 S. Franklin St.

ELEVATIONS

Sheet No.

A301

8/31/2016 2:09:28 PM

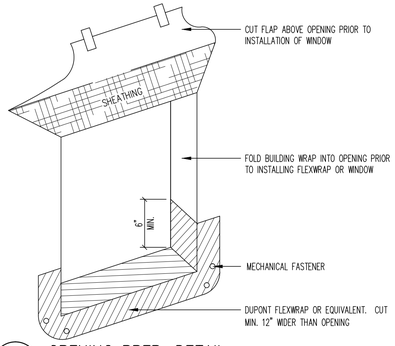

20 A401 OPENING PREP. DETAIL

N.T.S.

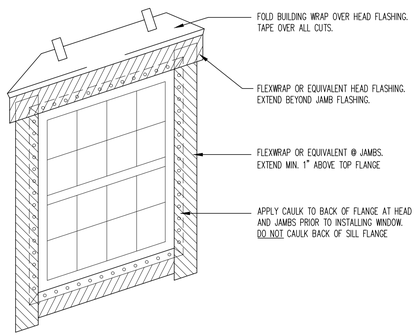

19 A401 WINDOW FLASHING DETAIL

N.T.S.

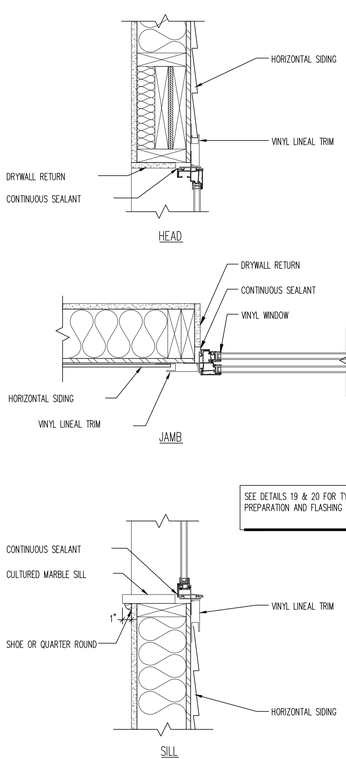

17 A401 VINYL WINDOW AT HORIZONTAL SIDING

1 1/2" = 1'-0"

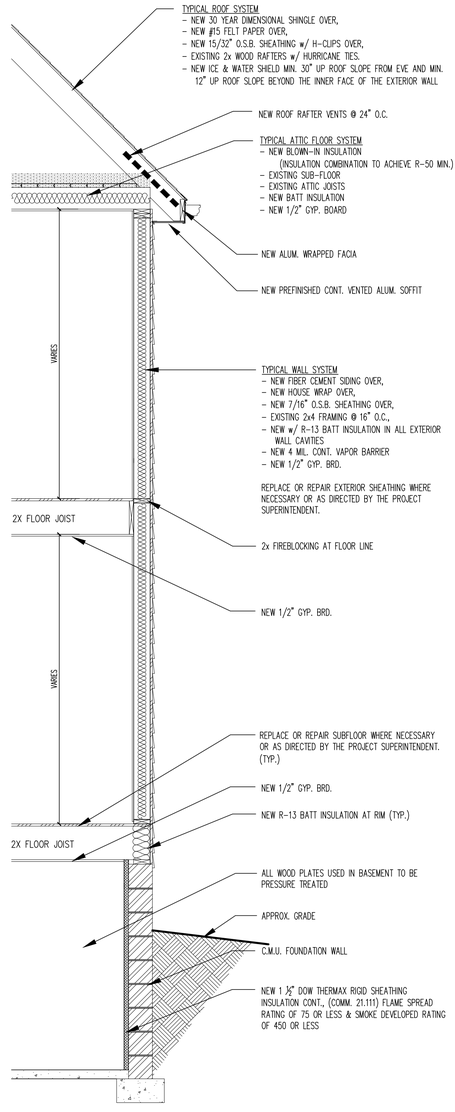

14 A401 WALL SECTION – EXISTING BLDG

1/2" = 1'-0"

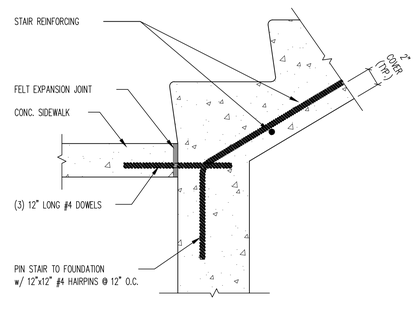

13 A401 STAIR FOOT DETAIL

1 1/2" = 1'-0"

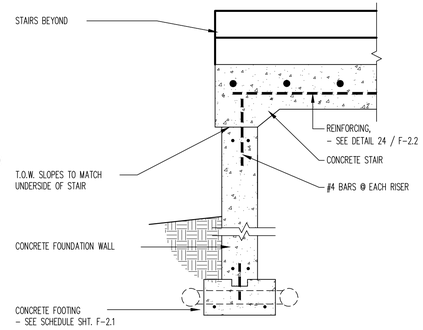

12 A401 SIDE OF CONCRETE STAIRS

3/4" = 1'-0"

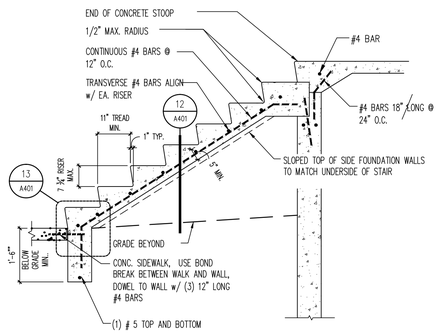

11 A401 CONCRETE STAIR AT STOOP

1/2" = 1'-0"

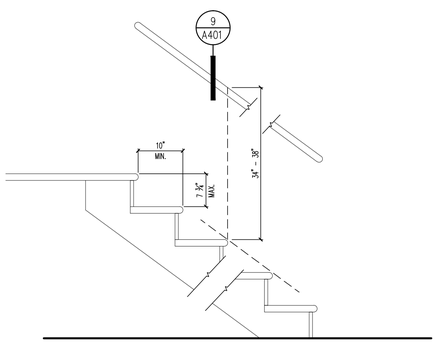

10 A401 TYP. STAIR RAILING MOUNTING

1/2" = 1'-0"

GRIPPING SURFACE SHALL COMPLY WITH ANSI 505.6.
-GRIPPING SURFACE TO BE CONTINUOUS, WITHOUT INTERRUPTION BY NEWEL POSTS, OTHER CONSTRUCTION ELEMENTS, OR OBSTRUCTIONS.

CROSS SECTION SHALL COMPLY WITH ANSI 505.7.
-CIRCULAR CROSS SECTION SHALL HAVE AN OUTSIDE DIAMETER OF 1 1/4" MIN. AND 2" MAX.
-NONCIRCULAR CROSS SECTION SHALL HAVE A PERIMETER DIMENSION OF 4" MIN. AND 6 1/4" MAX., AND A CROSS SECTION DIMENSION OF 2 1/4" MAX.

SUPPLY BRACKETS CAPABLE OF SUPPORTIG 200 LBS AT ANY POINT ON HANDRAIL

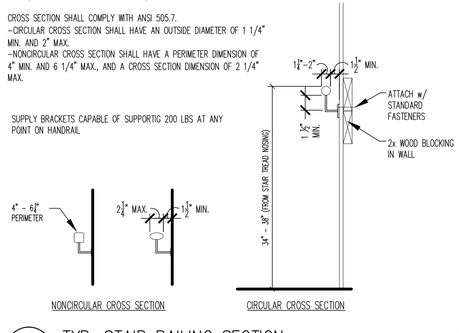

9 A401 TYP. STAIR RAILING SECTION

1" = 1'-0"

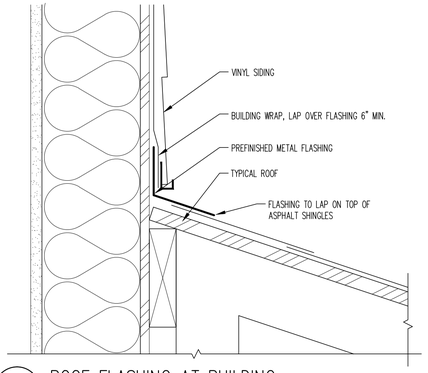

8 A401 ROOF FLASHING AT BUILDING

3" = 1'-0"

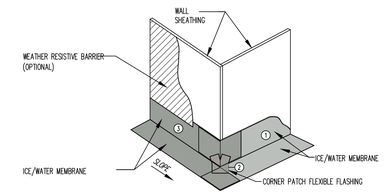

NOTES:

1. INSTALL ICE/WATER MEMBRANE IN ORDER AS SHOWN BY NUMBERS
2. INTEGRATE ICE/WATER MEMBRANE AND UNDERLAYMENT TO FORM WATER SHEDDING LAPS
3. INSTALL FLASHING AND ROOFING AS PER MANUFACTURERS' RECOMMENDATION

4 A401 OUTSIDE CORNER (WALL TO DECK)

1" = 1'-0"

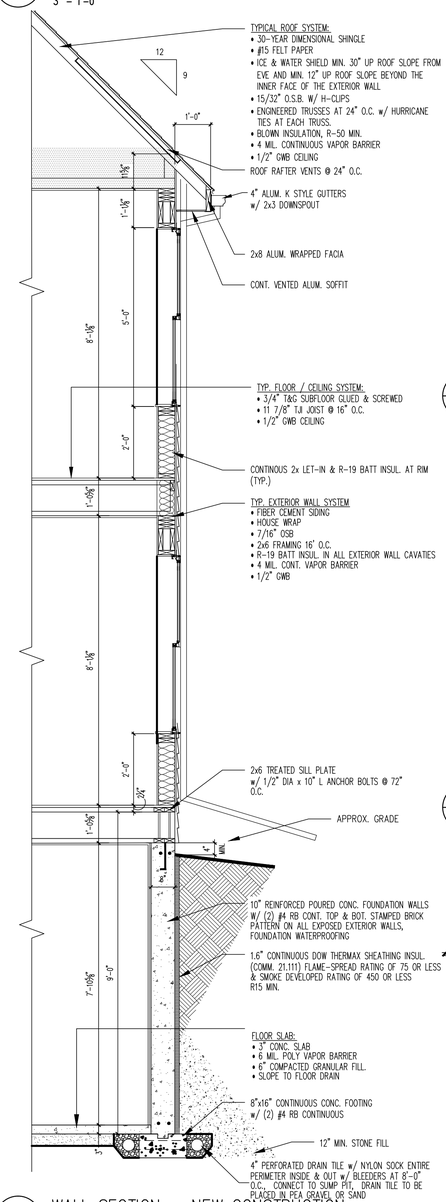

5 A401 WALL SECTION – NEW CONSTRUCTION

1/2" = 1'-0"

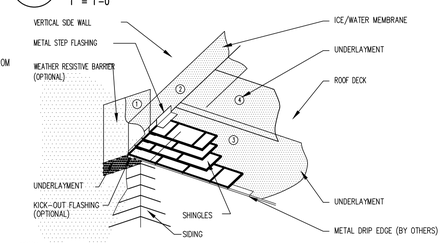

NOTES:

1. EXTEND ICE/WATER MEMBRANE ON THE ROOF DECK ABOVE THE HIGHEST EXPECTED LEVEL OF WATER BACK-UP FROM ICE DAMS
2. EXTEND UNDERLAYMENT BEYOND EAVE ONTO VERTICAL SIDE WALL FOR PROTECTION AGAINST RUN-OFF FROM ROOF
3. THE METAL FLASHING IS INSTALLED OVER THE UNDERLAYMENT AND ICE/WATER MEMBRANE
4. INSTALL UNDERLAYMENT AND ICE/WATER MEMBRANE IN ORDER AS SHOWN BY NUMBERS
5. INTEGRATE ICE/WATER MEMBRANE AND UNDERLAYMENT TO FORM WATER-SHEDDING LAPS

3 A401 VERTICAL SIDE WALL

N.T.S

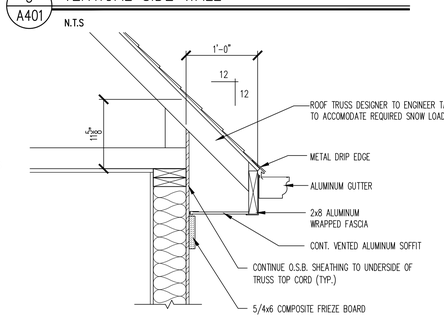

INSTALL "GRACE" ICE & WATER SHIELD, AT ALL ROOF EAVES AND VALLEYS. EXTEND FROM THE EAVE'S EDGE TO A POINT AT LEAST 24" INSIDE THE EXTERIOR WALL LINE OF THE BUILDING. INSTALL PER MANUFACTURER'S SPECIFICATIONS (SEE I.B.C. SECT. 1507.2.8.2 FOR MORE INFO.)

2 A401 EAVE W/ DRIP EDGE STRIPPED-IN

1" = 1'-0"

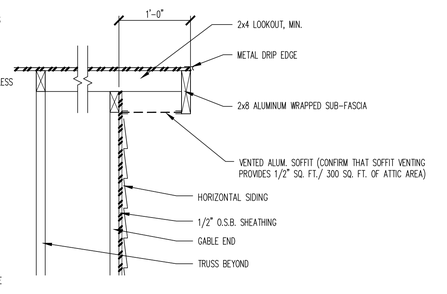

1 A401 FASCIA @ RAKE AT HORIZONTAL SIDING

1" = 1'-0"

FRANKLIN STREET HOUSE

138 SOUTH FRANKLIN STREET
MADISON, WI 53703

	2016.05.16 LANDMARKS COMMISSION

Revisions

Issue Date:	2016.05.16
Project No.	x
Drawn:	DMK
Checked:	X
Approved:	X

Sheet Title

138 S. Franklin St.

SECTIONS & DETAILS

Sheet No.

A401

8/31/2016 2:09:33 PM

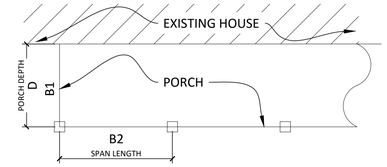

PORCH DEPTH (D)	BEAM (B1)	SPAN LENGTH (B2)				
		L=6'-0"	L=8'-0"	L=10'-0"	L=12'-0"	L=14'-0"
6'-0"	(2) 2x8	(2) 2x8	(2) 2x8 (2) 2x10	(3) 2x10 (2) 2x12	(3) 2x10 (2) 2x12	(3) 2x12 (2) 1 ¾x9 ½ LVL
8'-0"	(2) 2x8	(2) 2x8	(3) 2x8 (2) 2x10	(3) 2x10 (2) 2x12 (2) 1 ¾x9 ½ LVL	(3) 2x12 (2) 1 ¾x9 ½ LVL	(4) 2x12 (2) 1 ¾x9 ½ LVL
10'-0"	(3) 2x8 (2) 2x10	(2) 2x8	(2) 2x10	(3) 2x10 (3) 2x12 (2) 1 ¾x9 ½ LVL	(3) 2x12 (2) 1 ¾x9 ½ LVL	(4) 2x12 (3) 1 ¾x9 ½ LVL (2) 1 ¾x11 ½ LVL
12'-0"	(2) 2x10	(2) 2x10	(3) 2x10 (2) 2x12 (2) 1 ¾x9 ½ LVL	(4) 2x10 (3) 2x12 (2) 1 ¾x9 ½ LVL	(4) 2x12 (3) 1 ¾x9 ½ LVL (2) 1 ¾x11 ½ LVL	(3) 1 ¾x9 ½LVL (2) 1 ¾x11 ½ LVL
14'-0"	(3) 2x10 (2) 2x12	(2) 2x10	(3) 2x10 (2) 2x12 (2) 1 ¾x9 ½ LVL	(3) 2x12 (3) 1 ¾x9 ½ LVL	(3) 1 ¾x9 ½ LVL (2) 1 ¾x11 ½ LVL	(3) 1 ¾x11 ½ LVL (2) 1 ¾x14 ½ LVL

*60 LBS LIVE LOAD; 15 LB DEAD LOAD

3 A402

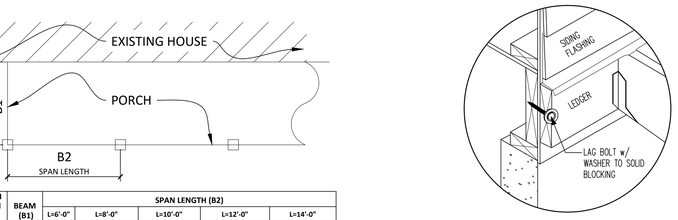

A LEDGER OPT. 1

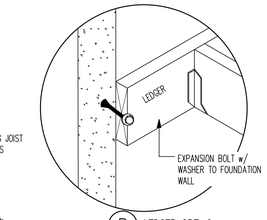

B LEDGER OPT. 2

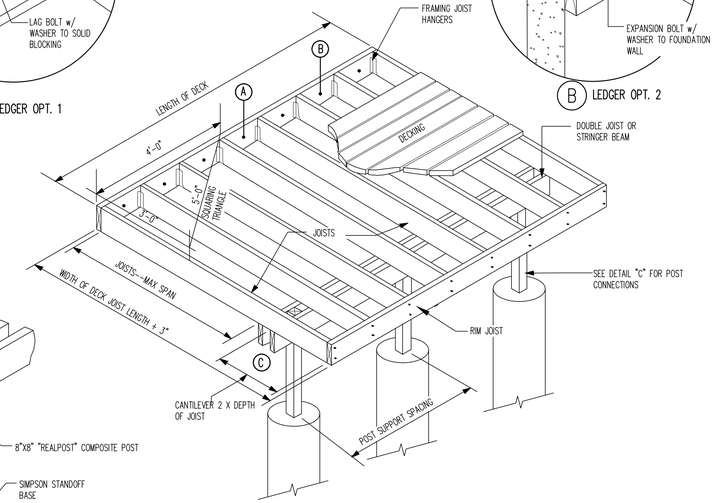

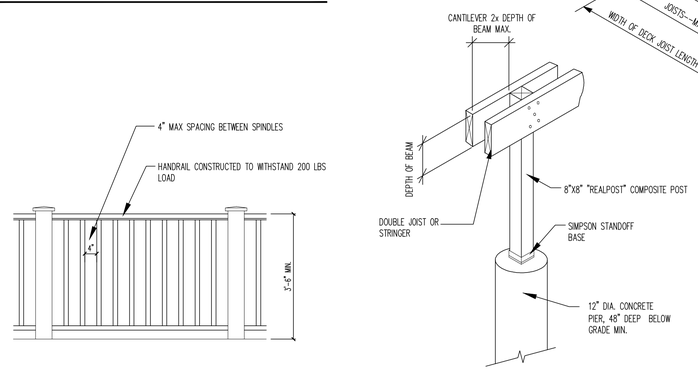

C POST / BEAM DETAIL

MAXIMUM SPANS FOR DECK JOIST *														
	2x6 JOIST			2x8 JOIST			2x10 JOIST			2x12 JOIST		
WOOD SPECIES **	12" O.C.	16" O.C.	24" O.C.	12" O.C.	16" O.C.	24" O.C.	12" O.C.	16" O.C.	24" O.C.	12" O.C.	16" O.C.	24" O.C.
DOUGLAS FIR-LARCH	10'-9"	9'-9"	8'-3"	14'-2"	12'-9"	10'-5"	18'-0"	15'-7"	12'-9"	20'-11"	18'-1"	14'-9"
HEM-FIR	10'-0"	9'-1"	7'-11"	13'-2"	12'-0"	10'-2"	16'-10"	15'-2"	12'-5"	20'-4"	17'-7"	14'-4"
SOUTHERN PINE	10'-9"	9'-9"	8'-6"	14'-2"	12'-10"	11'-0"	18'-0"	16'-1"	13'-2"	21'-9"	18'-10"	15'-4"
WESTERN RED CEDAR **	9'-6"	8'-3"	6'-9"	12'-1"	10'-5"	8'-6"	14'-9"	12'-9"	10'-5"	17'-1"	14'-9"	12'-1"

* 40 LBS LIVE LOAD; 10 LB DEAD LOAD; DEFLECTION = SPAN / 360

** WESTERN RED CEDAR, No. 1 / No. 2; ALL OTHER LUMBER No. 2 OR BETTER

1 A402 PORCH & DECK DETAILS

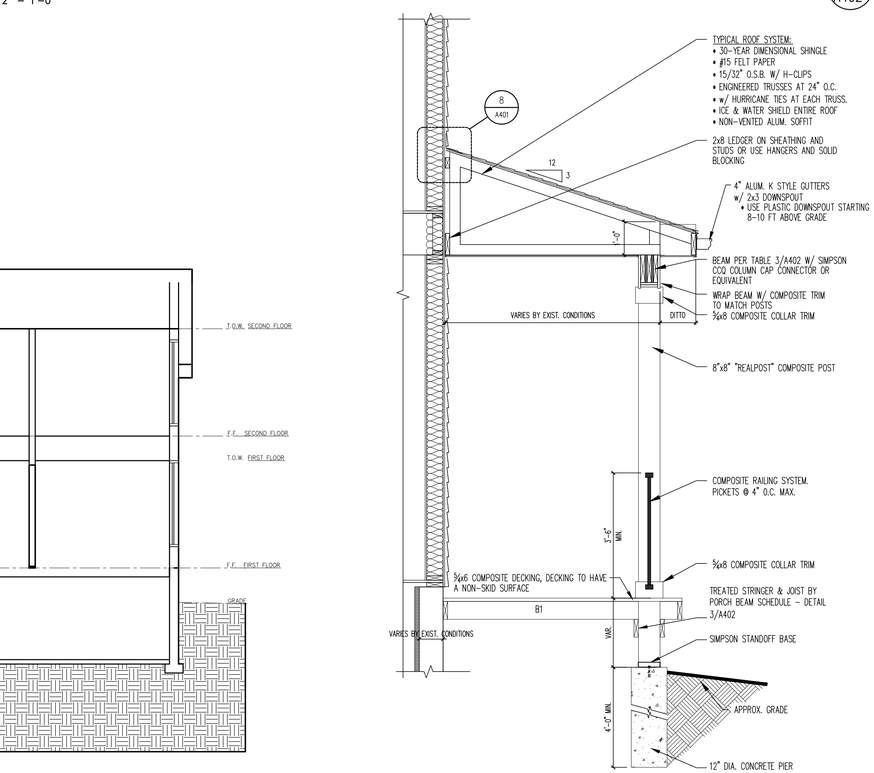

2 A402 TYP. PORCH & DECK SECTION

4 A402 RAILING DETAIL

1/2" = 1'-0"

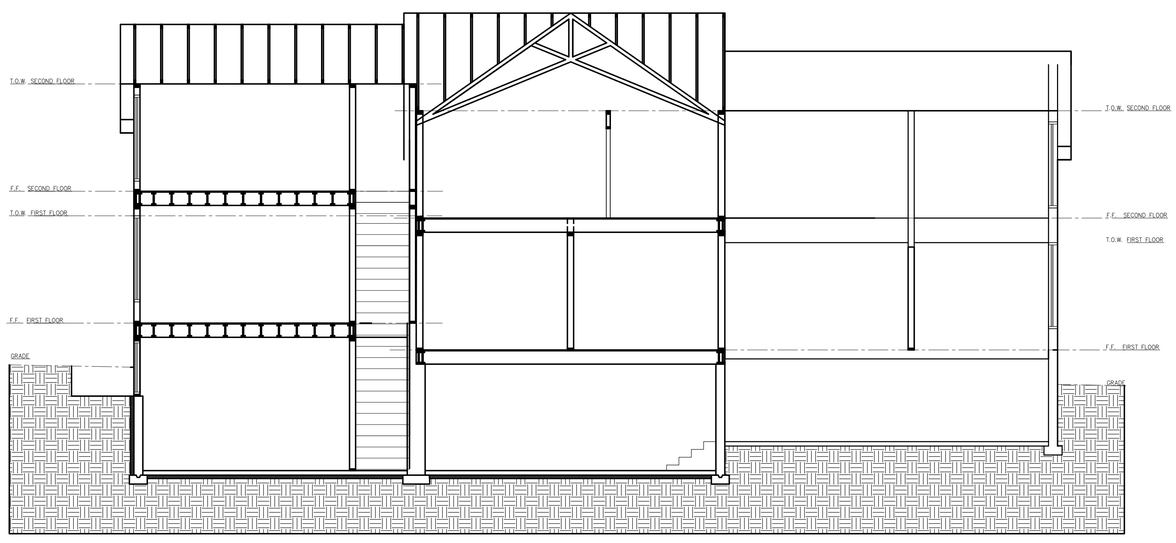

LONGITUDINAL SECTION

SCALE: 1/4" = 1'-0"

FRANKLIN STREET HOUSE

138 SOUTH FRANKLIN STREET
MADISON, WI 53703

Revisions	
1	2016.05.16 LANDMARKS COMMISSION

Issue Date:	2016.05.16
Project No.	x
Drawn:	DMK
Checked:	x
Approved:	x

Sheet Title

138 S. Franklin St.

PORCH & DECK DETAILS

Sheet No.

A402

8/31/2016 2:09:35 PM