APPLICATION FOR
URBAN DESIGN COMMISSION
REVIEW AND APPROVAL

AGENDA ITEM # _____
Project # _____

DATE SUBMITTED: 2/25/2009

UDC MEETING DATE: 3/04/2009

Action Requested
___ Informational Presentation
X Initial Approval and/or Recommendation
___ Final Approval and/or Recommendation

PROJECT ADDRESS: 8002 Watts Road

ALDERMANIC DISTRICT: 9th

OWNER/DEVELOPER (Partners and/or Principals)
The Carey Group
2801 Coho Street
Madison, WI 53713

ARCHITECT/DESIGNER/OR AGENT:
Iconica
901 Deming Way
Madison, WI 53717

CONTACT PERSON: Duane Johnson
Address: Iconica - 901 Deming Way
Madison, WI 53717
Phone: (608) 664-3500
Fax: (608) 664-3535
E-mail address: Duane.Johnson@iconicacreates.com

TYPE OF PROJECT:
(See Section A for:)
X Planned Unit Development (PUD)
___ General Development Plan (GDP)
X Specific Implementation Plan (SIP)
___ Planned Community Development (PCD)
___ General Development Plan (GDP)
___ Specific Implementation Plan (SIP)
___ Planned Residential Development (PRD)
___ New Construction or Exterior Remodeling in an Urban Design District * (A public hearing is required as well as a fee)
___ School, Public Building or Space (Fee may be required)
___ New Construction or Addition to or Remodeling of a Retail, Hotel or Motel Building Exceeding 40,000 Sq. Ft.
___ Planned Commercial Site

(See Section B for:)
___ New Construction or Exterior Remodeling in C4 District (Fee required)

(See Section C for:)
___ R.P.S.M. Parking Variance (Fee required)

(See Section D for:)
___ Comprehensive Design Review* (Fee required)
___ Street Graphics Variance* (Fee required)

___ Other _____

*Public Hearing Required (Submission Deadline 3 Weeks in Advance of Meeting Date)

Where fees are required (as noted above) they apply with the first submittal for either initial or final approval of a project.

PLOT DATE: 02/25/2009

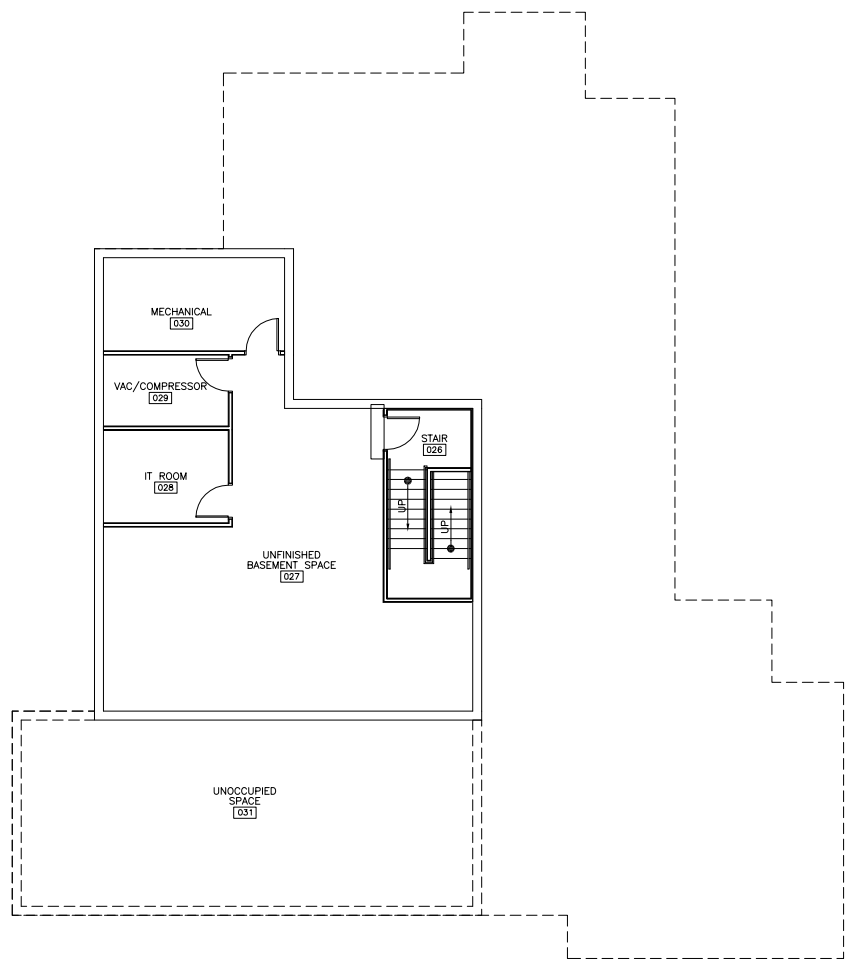

1 A201 BASEMENT FLOOR PLAN
SCALE: 1/8" = 1'-0"

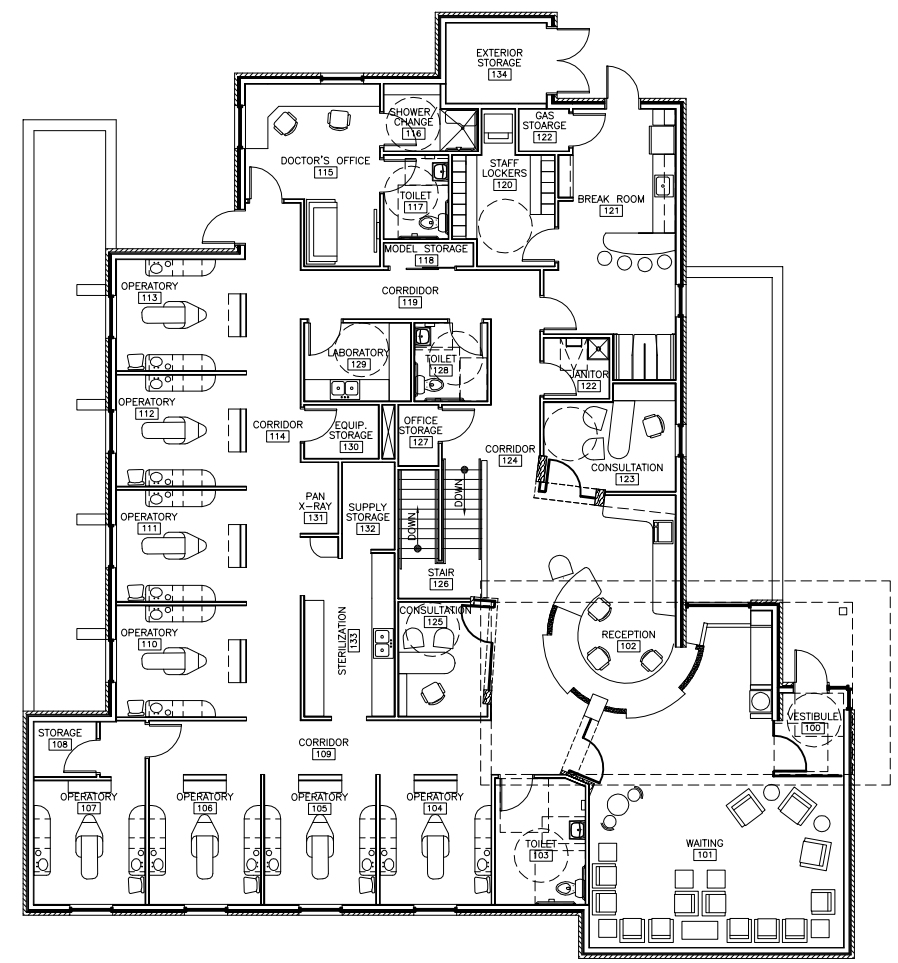

1 A201 FIRST FLOOR PLAN
SCALE: 1/8" = 1'-0"

NORTH

ICONICA
True Design-Build

901 Deming Way // Madison, WI 53717
Ph: 608.664.3500 // Fx: 608.664.3535
Iconicacreates.com

BYCE & WORMAN FAMILY DENTISTRY

8002 Watts Road
Madison, WI 53719

The Carey Group
2801 Coho Street
Madison, WI 53713

ISSUE DATES:

RFI/SI DATE:

Schematic Design Phase:

This drawing Indicates the scale and relationship of the project components. This drawing is **not for construction.**

This document contains confidential or proprietary information of Iconica. Neither the document nor the information herein is to be reproduced, distributed, used or disclosed, either in whole or in part, except as specifically authorized by Iconica.

PROJECT #: 20090170

SHEET NUMBER

A201

©2009 Iconica, Inc.

PLOT DATE: 02/25/2009

1 L100 LANDSCAPE PLAN
SCALE: 1" = 20'-0"

GENERAL NOTES

GENERAL NOTES APPLY ONLY TO THIS SHEET.

1.) TURF AREAS TO RECEIVE MINIMUM 4" OF TOPSOIL, STARTER FERTILIZER, AND #1 LOCALLY GROWN SOD.

2.) EXISTING LAWN DISTURBED BY PARKING LOT EXPANSION (TO NORTH) SHALL RECEIVE SHREDDED TOPSOIL AS NEEDED, SEED, STARTER FERTILIZER, AND MULCH.

3.) PLANTING BEDS SHALL BE EDGED WITH BLACK VINYL EDGE (VALLEY VIEW OR EQUAL).

4.) PLANTING BEDS TO RECEIVE 3" OF SHREDDED HARDWOOD BARK MULCH. INDIVIDUAL TREES IN LAWN TO RECEIVE 4' DIAMETER RING OF 3" OF SHREDDED HARDWOOD BARK MULCH.

5.) UNIT PAVER ENTRANCE WALK TO BE UNILOC BRUSSELS. OWNER WILL SELECT COLOR AND PATTERN.

6.) DECORATIVE BOULDERS TO BE 18"-24" NATIVE GLACIAL BOULDERS. OWNER WILL SELECT AND/OR APPROVE-CONTRACTOR WILL PROVIDE AND PLACE.

ELEMENT	POINT VALUE	QUANTITY	POINTS ACHIEVED	CREDITS QUANTITY	CREDITS POINTS		TOTAL
CANOPY TREE: 2"-2½"	35	6	210	1	35		
DECIDUOUS SHRUB	2	24	48	40	80		
EVERGREEN SHRUB	3	0	0				
DECORATIVE WALL OR FENCE (PER 10 L.F.)	5	0	0				
EARTH BERM AVG. HEIGHT 30" AVG. HEIGHT 15"		0	0				
EVERGREEN TREES	15	3	45				
CANOPY TREE OR SMALL TREE	15	1	15				
SUB TOTALS			318	+	115	=	433

3 L100 MADISON LANDSCAPE POINT SCHEDULE
SCALE: NONE
02930.900

PLANT LIST

KEY	QUANTITY	SIZE	TYPE	ROOT
CP	2	2½"	CALLERY PEAR	BB
PFC	6	2"	PRAIRIE FIRE CRAB	BB
LLL	1	2½"	LITTLE LEAF LINDEN	BB
SHL(E)	7	4"	SKYLINE HONEY LOCUST	EXISTING
SHL(E)	3	4"	SKYLINE HONEY LOCUST	EXITING RELOCATE
SHL	5	2½"	SKYLINE HONEY LOCUST	BB
LLL(E)	1	4"	LITTLE LEAF LINDEN	EXISTING RELOCATE
ABS	3	5'	AUTUMN BRILLIANCE SERVICEBERRY	BB
C(E)	5	2½"	FLOWERING CRAB	EXISTING RELOCATE
DJM	1	4'	DWARF JAPANESE MAPLE	BB
PD	1	5'	PAGODA DOGWOOD	BB
BHS	3	5'	BLACK HILLS SPRUCE	BB
DPJ	8	2 GAL	DWARF PROCUMBENS JUNIPER	CON
S(E)	2	8'	BLACKHILLS SPRUCE	EXISTING RELOCATE
AV	6	18"	ARROWOOD VIBURNUM	POT
CCV	12	24"	COMPACT CRANBERRY BUSH VIBURNUM	POT
GFS(E)	16	18"	GOLD FLAME SPIREA	EXISTING
GLS(E)	24	18"	GROW LOW SUMAC	EXISTING
ID	4	18"	ISANTI DOGWOOD	POT
MKL	4	24"	MISS KIM LILAC	POT
WV	2	24"	WAYFARING TREE VIBURNUM	POT
YR	3	2 GAL	YELLOW SHRUB ROSE	POT
LBS	6	1 GAL	LITTLE BLUE STEM	POT
P	150	1 QT	ASSORTED PERENNIALS (LISTED BELOW)	CON

AUTUMN JOY SEDUM
STELA D'ORO DAY LILY
MIDNIGHT WINE DAY LILY
HOSTA
IRIS
ASTER
BLACK EYED SUSAN
PURPLE CONE FLOWER
FEATHER REED GRASS
BLUE FESCUE

2 L100 PLANT SCHEDULE
SCALE: NONE

ICONICA
True Design-Build
901 Deming Way // Madison, WI 53717
Ph: 608.664.3500 // Fx: 608.664.3535
Iconicacreates.com

BYCE & WORMAN FAMILY DENTISTRY
8002 Watts Road
Madison, WI 53719

The Carey Group
2801 Coho Street
Madison, WI 53713

ISSUE DATES:

RFI/SI DATE:

This document contains confidential or proprietary information of Iconica. Neither the document nor the information herein is to be reproduced, distributed, used or disclosed, either in whole or in part, except as specifically authorized by Iconica.

PROJECT #: 20090170

SHEET NUMBER

L100

©2009 Iconica, Inc.

PLOT DATE: 02/25/2009

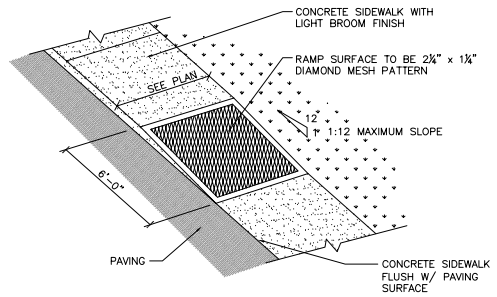

4 A101 ACCESSIBLE SIDEWALK RAMP
SCALE: NONE 02760.100

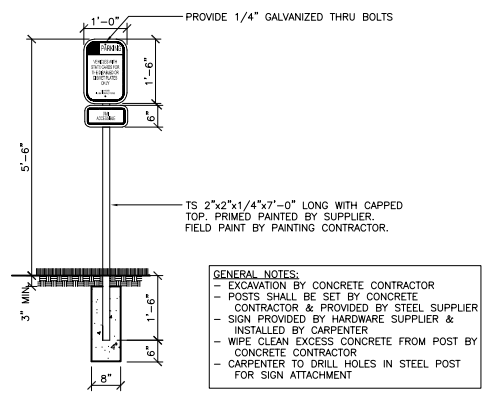

GENERAL NOTES:
- EXCAVATION BY CONCRETE CONTRACTOR
- POSTS SHALL BE SET BY CONCRETE CONTRACTOR & PROVIDED BY STEEL SUPPLIER
- SIGN PROVIDED BY HARDWARE SUPPLIER & INSTALLED BY CARPENTER
- WIPE CLEAN EXCESS CONCRETE FROM POST BY CONCRETE CONTRACTOR
- CARPENTER TO DRILL HOLES IN STEEL POST FOR SIGN ATTACHMENT

7 A101 WISCONSIN VAN ACCESSIBLE PARKING SIGN
SCALE: 1/2" = 1'-0" 02890.001

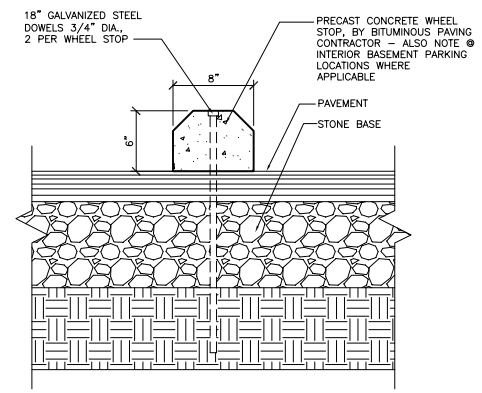

3 A101 CONCRETE WHEEL STOP
SCALE: 1 1/2" = 1'-0" 02840.000

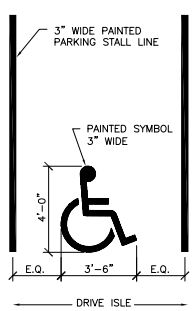

–VERIFY COLOR WITH DESIGN–BUILDER

6 A101 ACCESSIBLE PARKING STALL STRIPING
SCALE: NONE 02760.000

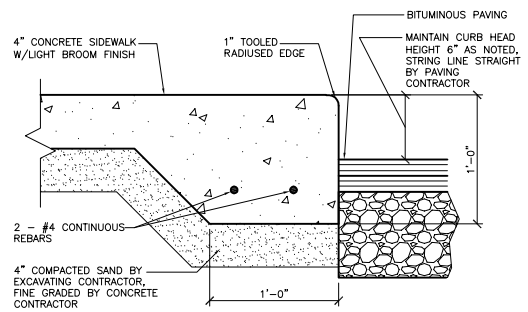

GENERAL NOTES:
- PROVIDE 1/4" PER FOOT CROSS SLOPE ACROSS WALK
- NO MESH REQUIRED
- PROVIDE TOOLED JOINTS @ +/– 5'-0" O.C. U.N.O.

3 A101 6" THICKENED EDGE SIDEWALK
SCALE: 1 1/2" = 1'-0" 02775.002

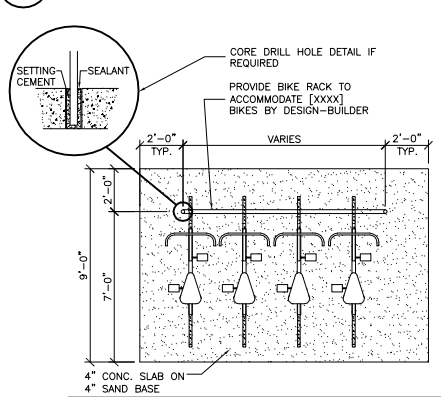

GENERAL NOTES:
- ORDER EARLY TO AVOID CORE DRILL, CORE DRILL BY DESIGN–BUILDER ONLY IF NECESSARY FOR LATER INSTALLATION.
- WIPE RACK CLEAN OF CONCRETE
- IF CORE DRILLED, DESIGN–BUILDER TO INSTALL SETTING CEMENT & SEALANT

5 A101 SINGLE LOADED BIKE RACK PAD
SCALE: 1/4" = 1'-0" 02775.402

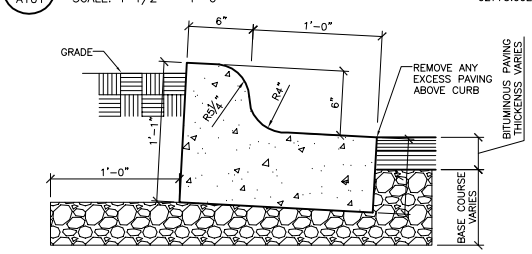

GENERAL NOTES:
- SEE TOP OF CURB PLAN TO DETERMINE LOCATIONS OF HOLDING OR REJECT CURBS.
- IF SIDEWALK ABUTS CURB, BACK OF CURB TO BE "STRING LINE" STRAIGHT & RUBBED CLEAN.
- PROVIDE CONTROL JOINTS 10'± O.C. PROVIDE BITUMINOUS EXPANSION JOINTS 50' O.C.
- EARTHWORK CONTRACTOR TO SUBGRADE AND STONE 12" BEYOND BACK OF CURB TO PROVIDE COMPACTED LEVELING BASE FOR CURB AND GUTTER.
- EARTHWORK CONTRACTOR TO REMOVE ALL EXCESS STONE BEHIND BACK OF CURB IN LANDSCAPE ISLANDS. THIS APPLIES TO EXCESS STONE BEYOND 12" AT BACK OF CURB.
- PAVING CONTRACTOR SHALL PROVIDE FLUSH BITUMINOUS TO CONCRETE CURB. IF BITUMINOUS IS RAISED AFTER PAVING, PAVING CONTRACTOR SHALL HEAT UP, REMOVE AND COMPACT EXCESS PAVEMENT.

2 A101 6" CONCRETE REJECT CURB & GUTTER
SCALE: 1 1/2" = 1'-0" 02770.004

1 A101 SITE PLAN
SCALE: 1" = 20'–0"

ICONICA
True Design–Build

901 Deming Way // Madison, WI 53717
Ph: 608.664.3500 // Fx: 608.664.3535
Iconicacreates.com

BYCE & WORMAN FAMILY DENTISTRY
8002 Watts Road
Madison, WI 53719

The Carey Group
2801 Coho Street
Madison, WI 53713

ISSUE DATES:

RFI/SI DATE:

This document contains confidential or proprietary information of Iconica. Neither the document nor the information herein is to be reproduced, distributed, used or disclosed, either in whole or in part, except as specifically authorized by Iconica.

PROJECT #: 20090170

SHEET NUMBER
A101

©2009 Iconica, Inc.

PLOT DATE: 02/25/2009

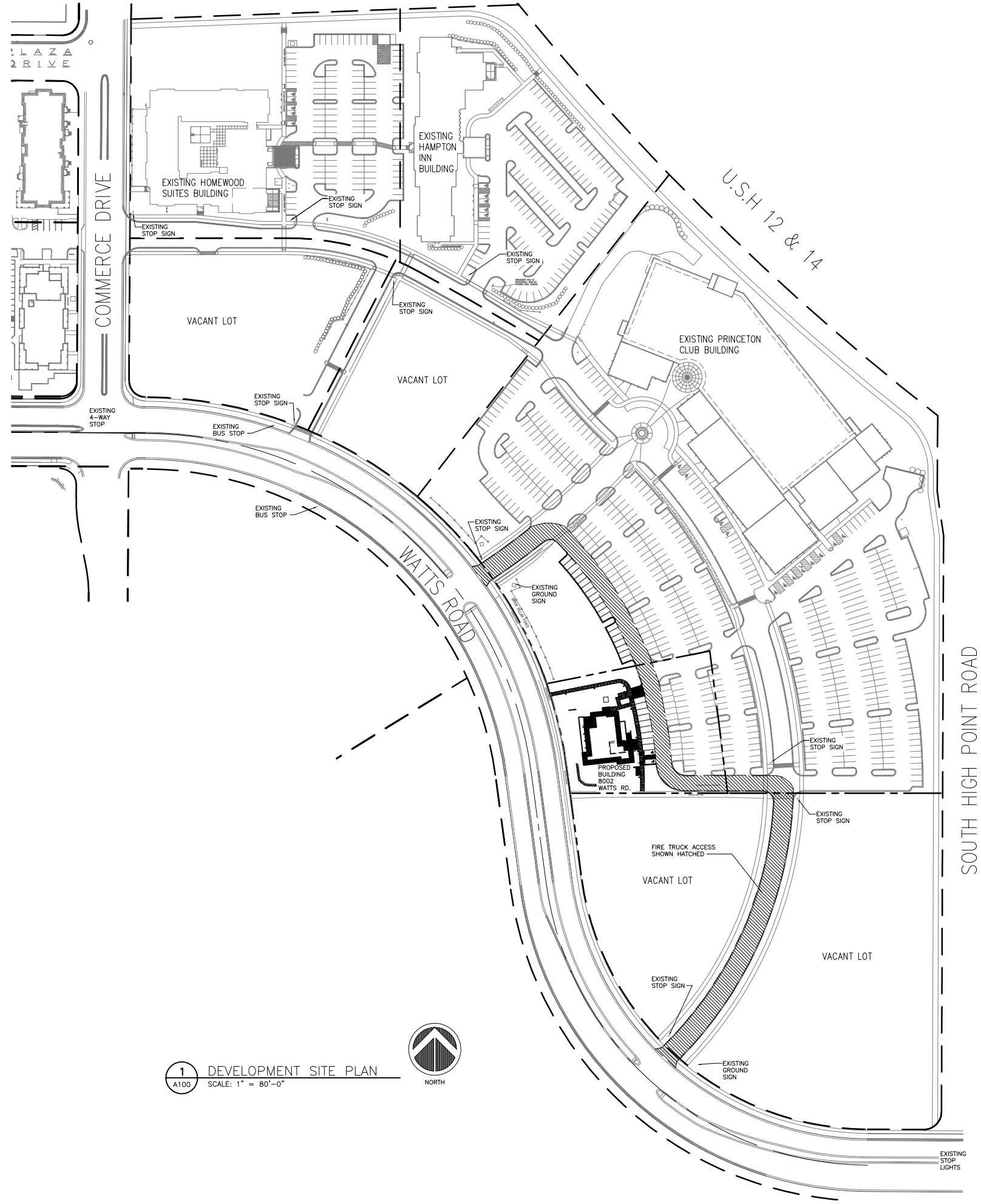

1 / A100 DEVELOPMENT SITE PLAN
SCALE: 1" = 80'-0"

ICONICA
True Design-Build

901 Deming Way // Madison, WI 53717
Ph: 608.664.3500 // Fx: 608.664.3535
Iconicacreates.com

BYCE & WORMAN FAMILY DENTISTRY
8002 Watts Road
Madison, WI 53719

The Carey Group
2801 Coho Street
Madison, WI 53713

ISSUE DATES:

RFI/SI DATE:

This document contains confidential or proprietary information of Iconica. Neither the document nor the information herein is to be reproduced, distributed, used or disclosed, either in whole or in part, except as specifically authorized by Iconica.

PROJECT #: 20090170

SHEET NUMBER

A100

©2009 Iconica, Inc.