APPLICATION FOR
URBAN DESIGN COMMISSION
REVIEW AND APPROVAL

AGENDA ITEM # _____
Project # 05944

DATE SUBMITTED: 6-12-07

UDC MEETING DATE: 6-19-07

Action Requested
___ Informational Presentation
___ Initial Approval and/or Recommendation
X Final Approval and/or Recommendation

PROJECT ADDRESS: 530 & 610 Junction Rd.

ALDERMANIC DISTRICT: 9

OWNER/DEVELOPER (Partners and/or Principals)
Outlook Development Group
576 W17605 Janesville Rd
Muskego, WI 53150

ARCHITECT/DESIGNER/OR AGENT:
Welman Architects
21675 Long View Dr.
Waukesha, WI 53186

CONTACT PERSON: Matt Stamboorski
Address: 576 W17605 Janesville Rd.
Muskego, WI 53150
Phone: 262 679 1496
Fax: 262 679 3626
E-mail address: Matt@Outlookdev.com

9:50 a.m.

RECEIVED
JUN 2007
City of Madison
Planning Unit

TYPE OF PROJECT:
(See Section A for:)
X Planned Unit Development (PUD)
X General Development Plan (GDP)
X Specific Implementation Plan (SIP)
___ Planned Community Development (PCD)
___ General Development Plan (GDP)
___ Specific Implementation Plan (SIP)
___ Planned Residential Development (PRD)
___ New Construction or Exterior Remodeling in an Urban Design District * (A public hearing is required as well as a fee)
___ School, Public Building or Space (Fee may be required)
___ New Construction or Addition to or Remodeling of a Retail, Hotel or Motel Building Exceeding 40,000 Sq. Ft.
___ Planned Commercial Site

(See Section B for:)
___ New Construction or Exterior Remodeling in C4 District (Fee required)

(See Section C for:)
___ R.P.S.M. Parking Variance (Fee required)

(See Section D for:)
___ Comprehensive Design Review* (Fee required)
___ Street Graphics Variance* (Fee required)

___ Other _____

*Public Hearing Required (Submission Deadline 3 Weeks in Advance of Meeting Date)

Where fees are required (as noted above) they apply with the first submittal for either initial or final approval of a project.

6" EXTENDED POLE MOUNT

16" (406 mm) AREA CUTOFF LIGHT

AC2-16 SERIES

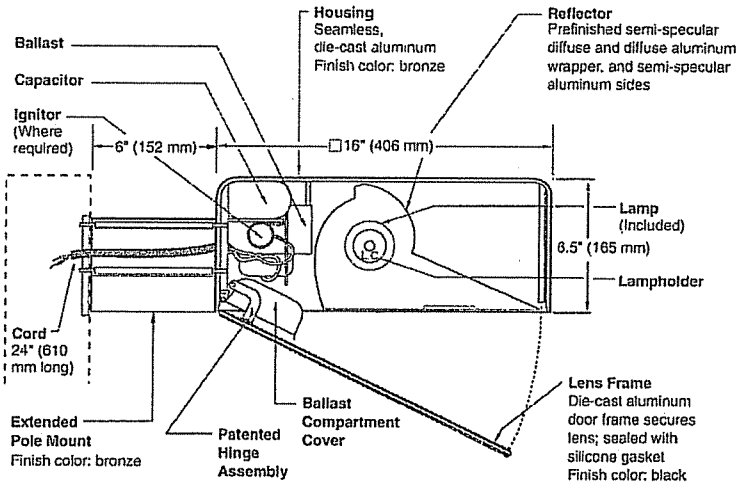

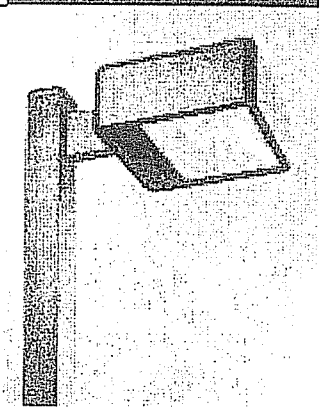

Notes

SPEC #	WATTAGE	CATALOG #
	PULSE START METAL HALIDE	
☐	200W PSMH	AC2620-(a)(b)
☐	250W PSMH	AC2625-(a)(b)
☐	320W PSMH	AC2632-(a)(b)
☐	350W PSMH	AC2635-(a)(b)
☐	400W PSMH	AC2640-(a)(b)
	METAL HALIDE	
☐	175W MH	AC2417-(a)(b)
☐	250W MH	AC2425-(a)(b)
☐	400W MH	AC2440-(a)(b)
	HIGH PRESSURE SODIUM	
☐	250W HPS	AC2525-(a)(b)
☐	400W HPS	AC2540-(a)(b)

Specify (a) Voltage & (b) Options.
Reduced envelope ED28 lamp.

(a) VOLTAGE SUFFIX KEY	
M	120/208/240/277V (Standard)
T	120/277/347V (Canada Only) (Standard)
1	120V
2	277V
27	277V Reactor (PSMH Only)
3	208V
4	240V
5	480V
6	347V (Canada Only)

For voltage availability outside the US and Canada, see Bulletin TD-9 or contact your Ruud Lighting authorized International Distributor.

(b) OPTIONS (factory-installed)	
-(a)F	Fusing
-(a)P	Button Photocell
-5P	External Photocell (for 480V)
Q	Quartz Standby (includes 100W quartz lamp) (N/A on 277V Reactor)

Specify (a) Single Voltage — See Voltage Suffix Key

GENERAL DESCRIPTION

60° forward throw sharp cutoff luminaire for HID lamp, totally enclosed. Housing is seamless, die-cast aluminum. Mounting consists of a 1.8" (44 mm) wide by 4.5" (114 mm) high by 6" (152 mm) long extruded aluminum arm. The arm is held in place with two 3/8" (9 mm) mounting rods fastened to a steel backing plate inside the pole, and by two nuts inside the fixture housing. Mounting rods are provided with sealing washers to prevent water leakage. Lens assembly consists of rigid aluminum frame and high-impact, clear-tempered glass.

ELECTRICAL

Fixture includes clear, mogul-base lamp; 320 – 400W PSMH and 400W MH utilize the ED28 reduced envelope lamp. Pulse-rated porcelain enclosed, 4kv-rated screw-shell-type lampholder with spring-loaded center contact and lamp grips. Lamp ignitor included where required. All ballast assemblies are high-power factor and use the following circuit type:

Reactor (277V PSMH)
200 – 400W PSMH

CWA — Constant Wattage Autotransformer
200 – 400W PSMH; 175 – 400W MH;
250 – 400W HPS

PATENTS

US 4,689,729

FINISH

Exclusive DeltaGuard® finish features an E-coat epoxy primer with medium bronze ultra-durable powder topcoat, providing excellent resistance to corrosion, ultraviolet degradation and abrasion. The finish is covered by our seven-year limited warranty.

LABELS

ANSI lamp wattage label supplied, visible during relamping. UL Listed in US and Canada for wet locations and enclosure classified IP65 per IEC 529 and IEC 598.

ACCESSORIES

FWG-16	Wire Guard
SBL-16	Backlight Shield

9201 Washington Avenue Racine, Wisconsin 53406-3772 USA PHONE (262) 886-1900 FAX (262) 884-3309

RUUD LIGHTING®

© Ruud Lighting Inc. Printed in USA

AC2-16 SERIES

6" EXTENDED POLE MOUNT

16" (406 mm) AREA CUTOFF LIGHT

EPA RATING

Isofootcandle plots show initial footcandles at grade. (Footcandles ÷ 0.0929 = Lux)

EPA 0.95 for single fixture with 0° tilt (Consult factory for EPA rating on multiple units).

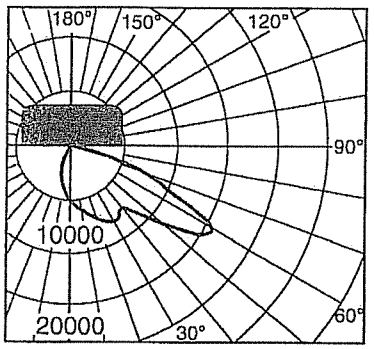

**Lighting Sciences Inc.
Certified Test Report No. LSI 10553
Candlepower distribution curve of 400W MH Area Cutoff Light without backlight shield.**

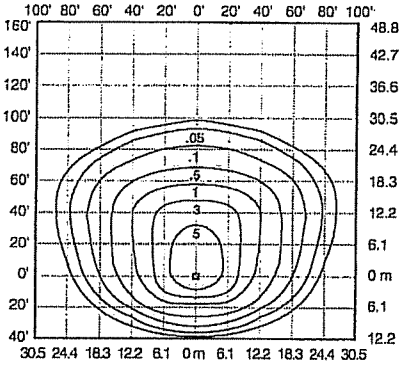

Isofootcandle plot of 400W MH Area Cutoff Light at 25' (7.6 m) mounting height, 0° vertical tilt, with backlight shield removed. (Plan view)

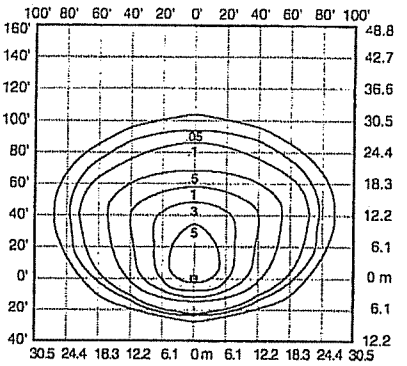

Isofootcandle plot of 400W MH Area Cutoff Light at 25' (7.6 m) mounting height, 0° vertical tilt, with backlight shield located for backlight cutoff. (Plan view)

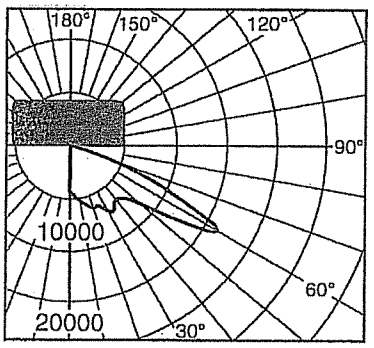

**Lighting Sciences Inc.
Certified Test Report No. LSI 10246
Candlepower distribution curve of 250W HPS Area Cutoff Light without backlight shield.**

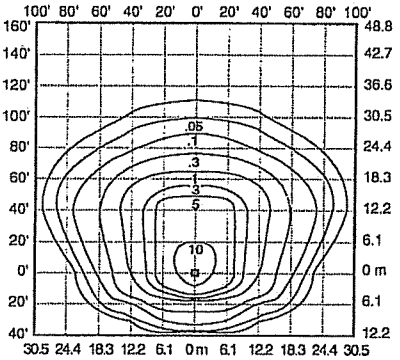

Isofootcandle plot of 400W HPS Area Cutoff Light at 25' (7.6 m) mounting height, 0° vertical tilt, with backlight shield removed. (Plan view)

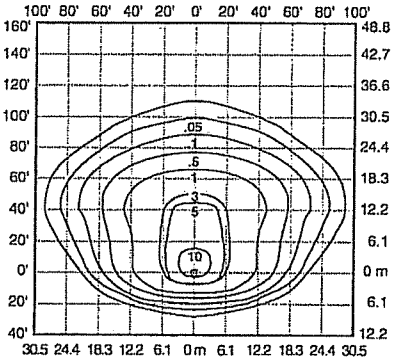

Isofootcandle plot of 400W HPS Area Cutoff Light at 25' (7.6 m) mounting height, 0° vertical tilt, with backlight shield located for backlight cutoff. (Plan view)

Pole-spacing Example Data

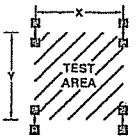

Test area is centered within a (16) pole layout.

**Average Initial Light Levels at Grade
2 Fixtures per pole @ 180°**
(Footcandles ÷ 0.0929 = Lux)

Catalog #	Lamp Type	Lamp Lumens	Mounting Height	Max. Recommended Pole-spacing X x Y	Footcandles	Lux
AC2417-M	175W MH	12,000	15' (4.6 m)	60' (18.3 m) x 85' (25.9 m)	3.56	38
			20' (6.1 m)	75' (22.9 m) x 110' (33.5 m)	2.11	23
AC2425-M	250W MH	20,000	20' (6.1 m)	75' (22.9 m) x 110' (33.5 m)	3.51	38
			25' (7.6 m)	95' (29.0 m) x 140' (42.7 m)	2.10	23
AC2440-M	400W MH	32,000	25' (7.6 m)	95' (29.0 m) x 140' (42.7 m)	3.36	36
			30' (9.1 m)	115' (35.1 m) x 165' (50.3 m)	2.29	25
AC2525-M	250W HPS	28,500	20' (6.1 m)	75' (22.9 m) x 110' (33.5 m)	4.83	52
			25' (7.6 m)	95' (29.0 m) x 140' (42.7 m)	2.89	31
AC2540-M	400W HPS	50,000	25' (7.6 m)	95' (29.0 m) x 140' (42.7 m)	5.08	55
			30' (9.1 m)	115' (35.1 m) x 165' (50.3 m)	3.37	36

RUUD LIGHTING®
9201 Washington Avenue Racine, Wisconsin 53406-3772 USA PHONE (262) 886-1900 FAX (262) 884-3309

© Ruud Lighting Inc. Printed in USA

Zoning Text GDP/SIP
Project Name: City Center Junction
Address: 530 & 610 Junction Road Madison, WI

Legal Description: The lands subject to this planned unit development shall include those described in Exhibit A, attached hereto.

A. **Statement of Purpose:** Outlook Development Group desires to develop two multi-story mixed use buildings consisting of ground floor retail space and second story office space. High quality design elements and materials will be used in design of both buildings. Additional amenities such as underground parking and pedestrian friendly elements are part of the plan.

B. **Permitted Uses:** The office uses to be permitted are those described in the current GDP/SIP. Outlined below are the additional uses which we intend to add in relation to our retail component of the development.

C. **Retail Categories:** Accessories, Apparel - Children's, Apparel - Men's, Apparel - Specialty, Apparel - Women's, Bridal/formal wear, Fine jewelry/watches, Leather/luggage, Optical/eyewear, Shoes, Beauty salons/tanning, Dry cleaning/laundry, Florists/nurseries, Photocopies/printing, Photofinishing/portrait studios, Signs/postal service, Bakeries/bagels/pretzels, Beer/wine/liquor, Candy/ice cream/yogurt, Coffee bars/juice bars, Convenience stores, Fast food, Restaurants/bars, Specialty foods, Supermarkets, Drug stores, Medical equipment, Nutrition shops/diet centers, Art/collectibles/frames, Bed and bath linens, Cards/stationery, China/glassware, Computers/software, Cutlery/kitchenware, Electronics, Fabrics, Floor coverings, Furniture/beds, Gifts/novelties/souvenirs, Hardware/home improvement, Home decor/lamps/drapes, Housewares/small appliances, Major appliances, Office supplies/furniture, Rental centers, Wall coverings/paint, Amusement/play centers, Art supplies/crafts/hobbies, Boats/marine supplies, Book stores, Cameras/video cameras, CDs/music/tapes, Child care/education, Cosmetics/body care/fragrance, DVD rental/sales, Educational/environmental, Fitness equipment, Health clubs/gyms, Movie theaters, Musical instruments/supplies, Newsstands, Outdoor/pool/patio, Sporting goods/athletic wear, Toys/games/video games, Wireless communications, Close-out stores, Department stores, Paper/party goods, Pets/animal supplies, Seasonal (temporary lease), Specialty uses.

C. **Lot Area**: As stated in site plan, attached hereto.

D. **Floor Area Ratio:**
   1. Maximum floor area ratio permitted is 1: 3.
   2. Maximum building height shall be 2 stories or as shown on approved plans.

E. **Yard Requirements**: Yard areas will be provided as shown on attached elevations.

F. **Landscaping**: Site landscaping will be provided as shown on the attached landscaping plan.

G. **Accessory Off-Street Parking & Loading**: Accessory off-street parking and loading will be provided as shown on the attached site plan.

H. **Lighting:** Site lighting will be provided as shown on the attached site plan.

I. **Signage:** Signage will be addressed with a monument sign of like building materials and sign bands for tenants of the development. The monument sign will be placed on the site plan at the intersection of Binder road and Junction road on the north end of parcel 530 Junction Road. Tenants will also have signage available in the form of channel lettering on a raceway above tenant store entrance(s) on the east and west sides of the development. In the case of the end caps of the center(s), tenants shall be able to have channel letters on a raceway on each elevation of the building. All signage shall have corporate store colors and logos as appropriate for identifying tenant's trade name.

J. **Alterations and Revisions:** No alteration or revision of this planned unit development shall be permitted unless approved by the City Plan Commission, however, the Zoning Administrator may issue permits for minor alterations or additions which are approved by the Director of Planning and Development and the alderperson of the district and are compatible with the concept approved by the City Plan Commission.

Outlook Development Group, LLC
W124 S9482 Prairie Meadows Dr.
Muskego, WI 53150

June 12, 2007
Department of Planning & Development
Madison Municipal Building
215 Martin Luther King, Jr. Blvd
P.O. Box 2984
Madison, WI 53701-2984

RE: Letter of Intent – City Center Junction Mixed Use Development located at 530 & 610 Junction Road Madison, WI.

To Members of the Planning Dept,

Please find outlined below detailed descriptions of our intended mixed use development project located at 530 & 610 Junction road.

Description of Indented Development: Outlook Development Group desires to develop two mixed use buildings consisting of ground floor retail space and second story office space. High quality design elements and materials will be used in design of both buildings. Additional amenities such as underground parking are part of the plan.

Existing Conditions: Currently the proposed site is a mixture of raw land and a parking lot.

Development Schedule: Outlook Development Group, LLC plans to retain ownership of the property in September 2007. Construction is expected to commence in the spring of 2008. Once construction commences the project should take approximately seven months to complete.

Contractors Involved in Project:
General Contractor – Mike Michalski Pinnacle Construction of WI, Inc.
Architect – Steve Esser Wellman Architects
Landscaper – Stano Landscaping
Business Manager – Matt Stamborski Outlook Development Group, LLC.

Types of Businesses: Businesses targeted will be general retail and office users that would typically be found in Class A high end mixed use developments.

Number of Employees: TBD depending on uses in the project.

Hours of Operation: TBD depending on uses in project.

Square Footage / Acreage of Site: 530 & 610 Junction road consists of 121,532.40 square feet or 2.79 Acres.

Number of Dwelling Units: N/A

Sale or Rental Price for Dwelling Units: N/A

Gross Square Footages of the Buildings: 530 Junction building consists of 23,448 gross square feet and 610 Junction consists of 27,560 gross square feet.

Parking Spaces: 156 surface lot spaces for general use and an additional 64 underground parking spaces for the exclusive use of the office tenants. Total parking for the development is 220 spaces.

Thank you for your time and consideration of our project. We look forward to working with the city of Madison. If there are any other items that you require, please don't hesitate to contact me directly at 262-679-1496.

Sincerely,

Mike Michalski
Outlook Development Group, LLC – Member

DATE: JUNE 12, 2007

CITY CENTER JUNCTION

PROJECT No: 26098

ARCHITECT | OWNER | CONTRACTOR | ENGINEERING CONSULTANTS

WELMAN ARCHITECTS I N C
21675 LONG VIEW DRIVE
SUITE 500
WAUKESHA, WISCONSIN 53186
FAX (262) 798.7001
PHONE (262) 798.7000
E-MAIL welman@welmanarch.com

OUTLOOK DEVELOPMENT GROUP

PINNACLE CONSTRUCTION OF WISCONSIN

CIVIL

CJ engineering
civil design and consulting
13005 W. Bluemound Rd.
Suite 250
Brookfield, WI 53005
PH. (262) 641-2848
FAX (262) 641-2871
www.cj-engineering.com

STRUCTURAL

Structural Dimension Inc.
11529 NORTH AVENUE
WAUWATOSA, WI 53226
Tel: (414) 771-4652 Fax: (414) 771-4653

T1.1 TITLE SHEET

CIVIL
C1.0 SITE GRADING PLAN
C2.0 SITE UTILITY PLAN
C3.0 EROSION CONTROL PLAN

LANDSCAPE
L1 LANDSCAPING PLAN

ARCHITECTURAL
A0.1 ARCHITECTURAL SITE PLAN

530 JUNCTION ROAD
BASEMENT PLAN
FIRST FLOOR PLAN
SECOND FLOOR PLAN
ELEVATIONS

610 JUNCTION ROAD
BASEMENT PLAN
FIRST FLOOR PLAN
SECOND FLOOR PLAN
ELEVATIONS

KEY PLAN

NORTH

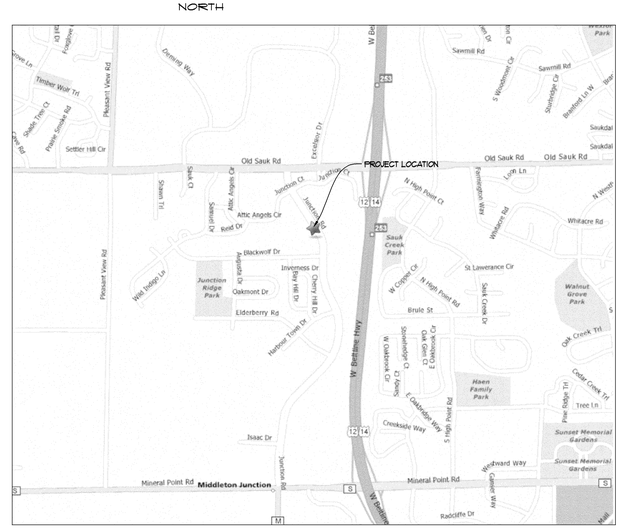

BUILDING INFORMATION

BUILDING TYPE	II-B
OCCUPANCY	MIXED USE
SPRINKLER SYSTEM	YES
SQUARE FOOTAGE	
530 BUILDING	23,448 S.F.
610 BUILDING	27,560 S.F.
TOTAL	51,008 S.F.

VICINITY MAP

NORTH

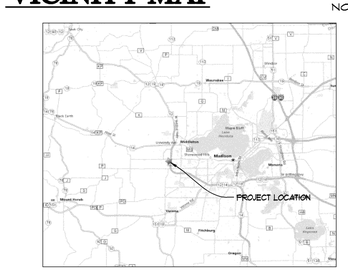

JUNE 12, 2007 PROJECT NO: 26098

CITY CENTER JUNCTION

WELMAN ARCHITECTS, INC.

CJ engineering
civil design and consulting
13005 W. Bluemound Rd.
Suite 250
Brookfield, WI 53005
PH. (262) 641-2848
FAX (262) 641-2871
www.cj-engineering.com

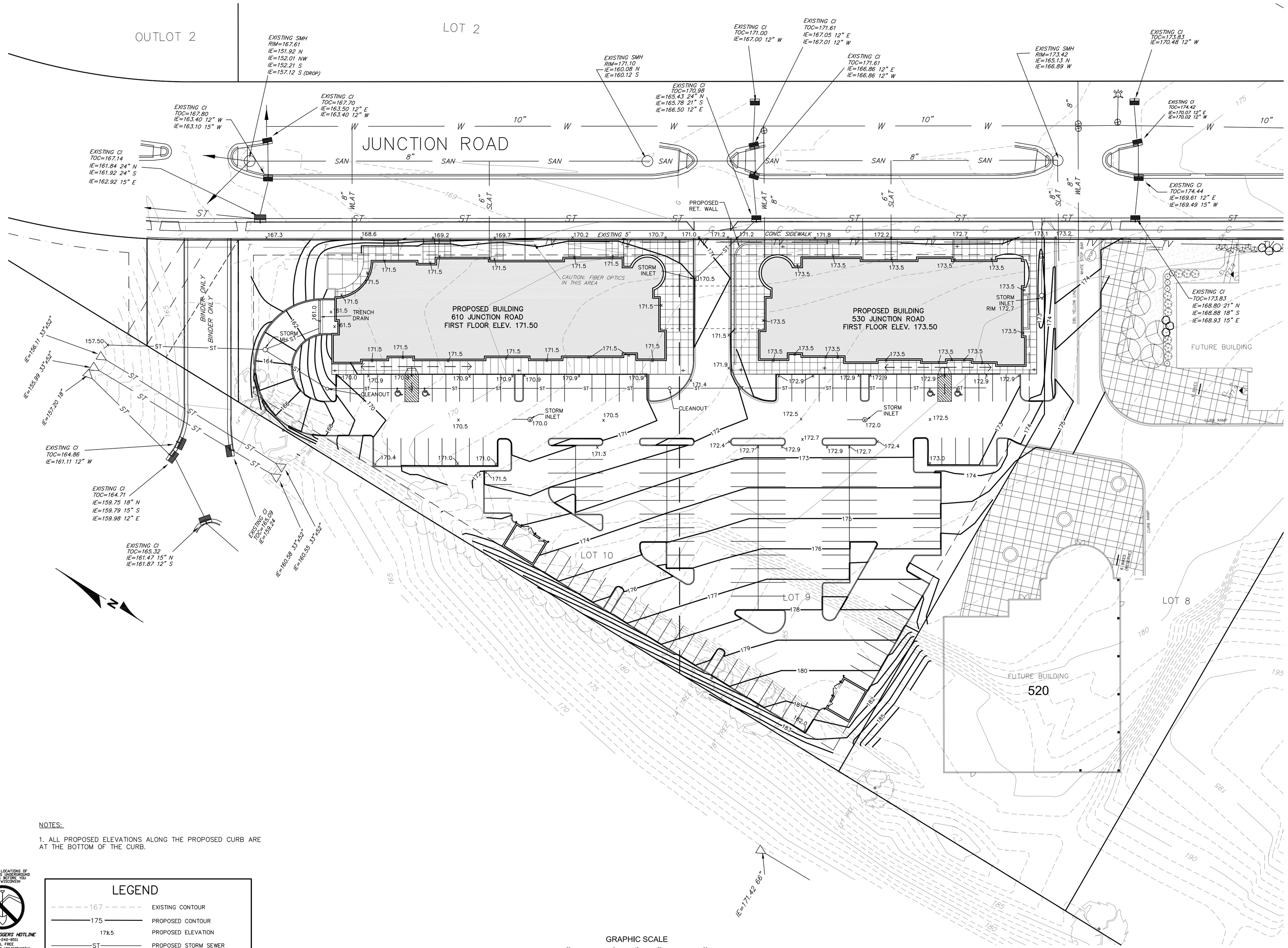

NOTES:

1. ALL PROPOSED ELEVATIONS ALONG THE PROPOSED CURB ARE AT THE BOTTOM OF THE CURB.

TO OBTAIN LOCATIONS OF PARTICIPANTS' UNDERGROUND FACILITIES BEFORE YOU DIG IN WISCONSIN

CALL DIGGERS HOTLINE
1-800-242-8511
TOLL FREE
WIS STATUTE 182.0175(1974) REQUIRES MIN 3 WORK DAYS NOTICE BEFORE YOU EXCAVATE
MILW. AREA 259-1181

LEGEND

- - - - 167 - - - -	EXISTING CONTOUR
——— 175 ———	PROPOSED CONTOUR
17x5	PROPOSED ELEVATION
——— ST ———	PROPOSED STORM SEWER

CITY CENTER JUNCTION
MADISON, WI

CJE NO.: 0712R4
MAY 29, 2007

SITE GRADING PLAN

C1.0
SHEET 1 OF 4

CJ engineering
civil design and consulting
13005 W. Bluemound Rd.
Suite 250
Brookfield, WI 53005
PH. (262) 641-2848
FAX (262) 641-2871
www.cj-engineering.com

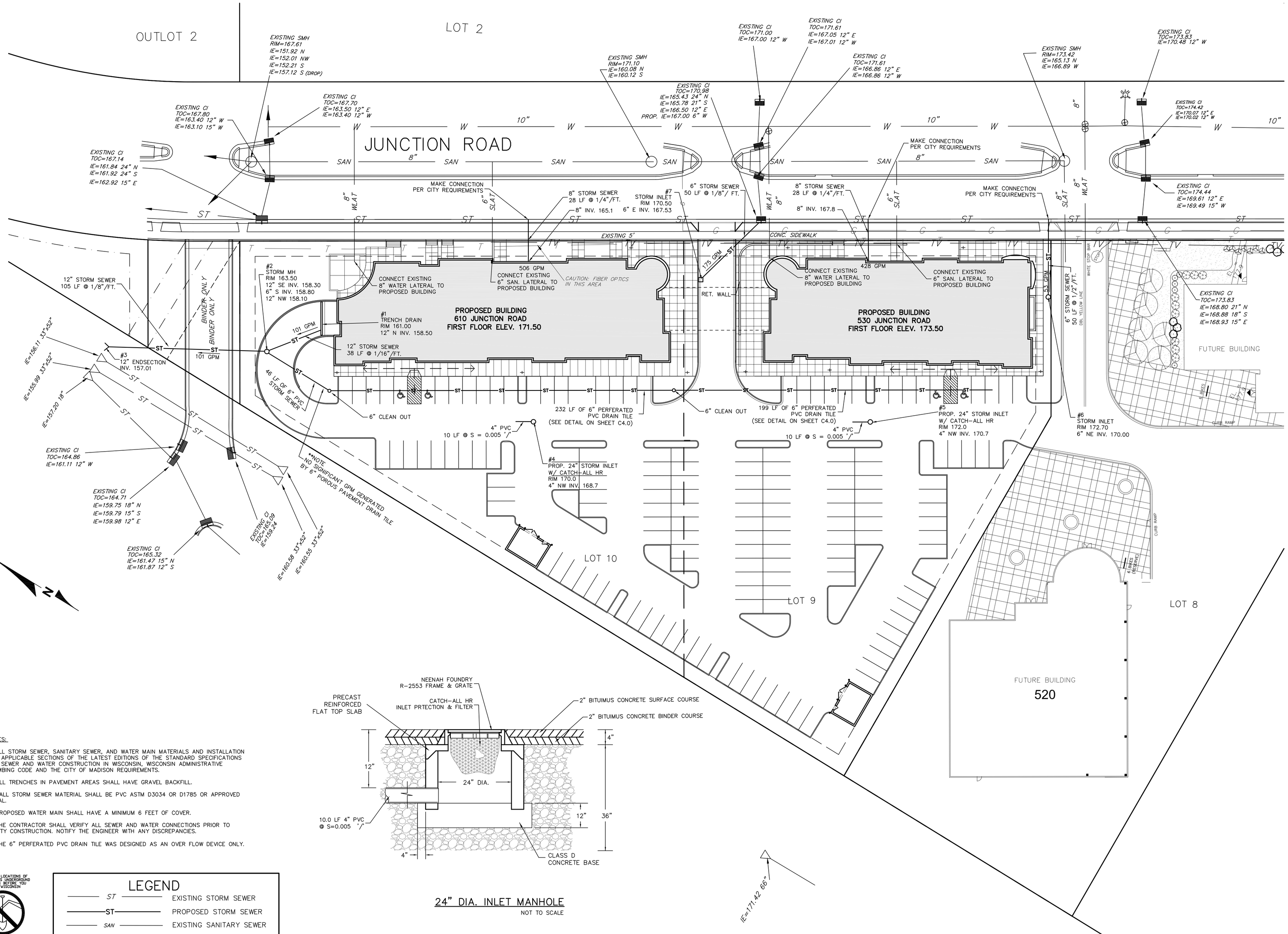

NOTES:

1. ALL STORM SEWER, SANITARY SEWER, AND WATER MAIN MATERIALS AND INSTALLATION PER APPLICABLE SECTIONS OF THE LATEST EDITIONS OF THE STANDARD SPECIFICATIONS FOR SEWER AND WATER CONSTRUCTION IN WISCONSIN, WISCONSIN ADMINISTRATIVE PLUMBING CODE AND THE CITY OF MADISON REQUIREMENTS.

2. ALL TRENCHES IN PAVEMENT AREAS SHALL HAVE GRAVEL BACKFILL.

3. ALL STORM SEWER MATERIAL SHALL BE PVC ASTM D3034 OR D1785 OR APPROVED EQUAL.

4. PROPOSED WATER MAIN SHALL HAVE A MINIMUM 6 FEET OF COVER.

5. THE CONTRACTOR SHALL VERIFY ALL SEWER AND WATER CONNECTIONS PRIOR TO UTILITY CONSTRUCTION. NOTIFY THE ENGINEER WITH ANY DISCREPANCIES.

6. THE 6" PERFERATED PVC DRAIN TILE WAS DESIGNED AS AN OVER FLOW DEVICE ONLY.

24" DIA. INLET MANHOLE
NOT TO SCALE

TO OBTAIN LOCATIONS OF PARTICIPANTS UNDERGROUND FACILITIES BEFORE YOU DIG IN WISCONSIN

CALL DIGGERS HOTLINE
1-800-242-8511
TOLL FREE
WIS STATUTE 182.0175(3)(a)1)
REQUIRES YOU TO HAVE MARKS
NOTIFICATION BEFORE YOU EXCAVATE
MILW. AREA 259-1181

LEGEND

ST	EXISTING STORM SEWER
ST	PROPOSED STORM SEWER
SAN	EXISTING SANITARY SEWER
SAN	PROPOSED SANITARY SEWER
W	EXISTING WATER MAIN
W	PROPOSED WATER MAIN

GRAPHIC SCALE
30 0 15 30 60
1 inch = 30 ft

CITY CENTER JUNCTION
MADISON, WI

CJE NO.: 0712R4
MAY 29, 2007

SITE UTILITY PLAN

C2.0
SHEET 2 OF 4

CJ engineering
civil design and consulting
13005 W. Bluemound Rd.
Suite 250
Brookfield, WI 53005
PH. (262) 641-2848
FAX (262) 641-2871
www.cj-engineering.com

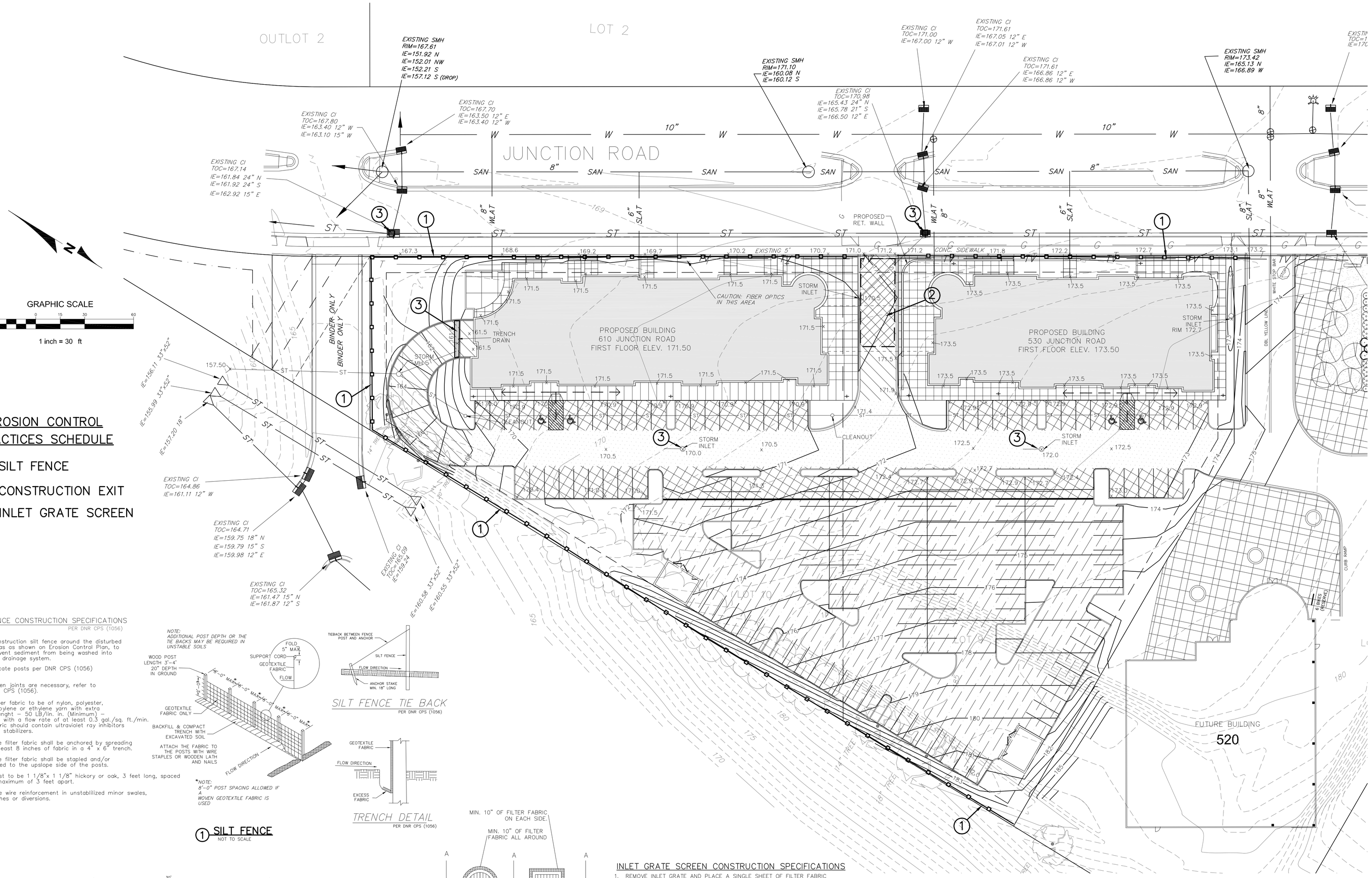

EROSION CONTROL PRACTICES SCHEDULE

1. SILT FENCE
2. CONSTRUCTION EXIT
3. INLET GRATE SCREEN

SILT FENCE CONSTRUCTION SPECIFICATIONS

PER DNR CPS (1056)

1. Construction silt fence around the disturbed areas as shown on Erosion Control Plan, to prevent sediment from being washed into the drainage system.
2. Locate posts per DNR CPS (1056)
3. When joints are necessary, refer to DNR CPS (1056).
4. Filter fabric to be of nylon, polyester, propylene or ethylene yarn with extra strenght – 50 LB/lin. in. (Minimum) – and with a flow rate of at least 0.3 gal./sq. ft./min. Fabric should contain ultraviolet ray inhibitors and stabilizers.
5. The filter fabric shall be anchored by spreading at least 8 inches of fabric in a 4" x 6" trench.
6. The filter fabric shall be stapled and/or nailed to the upslope side of the posts.
7. Post to be 1 1/8"x 1 1/8" hickory or oak, 3 feet long, spaced a maximum of 3 feet apart.
8. Use wire reinforcement in unstabilized minor swales, ditches or diversions.

SILT FENCE TIE BACK

PER DNR CPS (1056)

TRENCH DETAIL

PER DNR CPS (1056)

① SILT FENCE

NOT TO SCALE

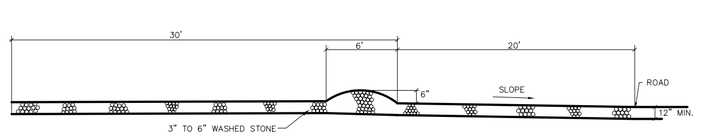

② CONSTRUCTION EXIT

NOT TO SCALE

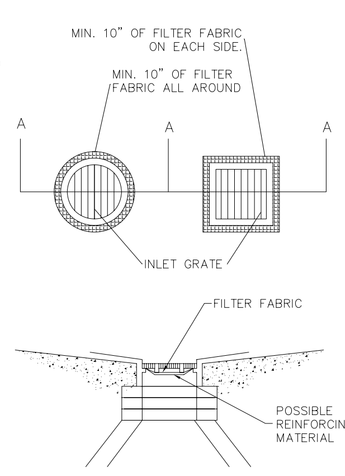

INLET GRATE SCREEN CONSTRUCTION SPECIFICATIONS

1. REMOVE INLET GRATE AND PLACE A SINGLE SHEET OF FILTER FABRIC ACROSS THE OPENING. THE FABRIC SHOULD EXTEND AT LEAST 10" BEYOND THE INLET OPENING. A REINFORCING MATERIAL MAY BE REQUIRED TO PREVENT SAGGING.

2. SEDIMENT DEPOSITS SHALL BE REMOVED AFTER EACH STORM EVENT OR AT A DEPTH OF 1". EXTREME CARE SHALL BE TAKEN NOT TO SPILL ACCUMULATED SEDIMENT INTO INLET, WHEN CLEANING OR REPLACING FILTER FABRIC.

3. FILTER FABRIC SHALL HAVE THE FOLLOWING PROPERTIES:
   A. GRAB STRENGTH: 100LBS. (ASTM D–3786)
   B. MULLEN BURST: 200 PSI (ASTM D–3786)
   C. EQUIVALENT OPENING SIZE: BETWEEN 50 AND 140 FOR SOILS WITH MORE THAN 15 PERCENT BY WEIGHT PASSING A NO. 200 SIEVE. BETWEEN 20 AND 50 FOR SOILS WITH LESS THAN 15 PERCENT BY WEIGHT PASSING A NO. 200 SIEVE.
   D. WATER FLOW RATE OF 10 GAL/MIN./SQ.FT. AT 50 MM CONSTANT HEAD (ASTM D–4491)
   E. ULTRA VIOLET RADIATION STABILITY OF 90% F. IF SUPPORT NETTING IS REQUIRED, NETTING SHALL BE AN INDUSTRIAL POLYPROPYLENE WITH A 3/4 INCH SPACING OR EQUIVALENT.

③ INLET GRATE SCREEN

NOT TO SCALE

TO OBTAIN LOCATIONS OF PARTICIPANTS UNDERGROUND FACILITIES, BEFORE YOU DIG IN WISCONSIN

CALL DIGGERS HOTLINE
1-800-242-8511
TOLL FREE
WIS STATUTE 182.0175(1974) REQUIRES MIN. 3 WORK DAYS NOTICE BEFORE YOU EXCAVATE
MILW. AREA 259-1181

LEGEND

887	EXISTING CONTOUR
885	PROPOSED CONTOUR
x 890.5	PROPOSED ELEVATION
ST	PROPOSED STORM SEWER
	SILT FENCE

CONSTRUCTION SCHEDULE

1. OBTAIN PLAN APPROVAL AND OTHER APPLICABLE PERMITS.
2. FLAG THE WORK LIMIT AND BUFFER AREA FOR PROTECTION.
3. INSTALL SILT FENCE.
4. INSTALL INLET GRATE SCREENS ON ALL EXISTING INLETS ADJACENT TO THE PROJECT AREA.
5. INSTALL CONSTRUCTION EXIT.
6. STRIP AND REMOVE TOPSOIL (IF ANY)
7 ROUGH GRADE SITE PER POROUS PAVEMENT SPECIFICATIONS.
8. INSTALL PROPOSED UTILITIES.
9. BEGIN BUILDING CONSTRUCTION.
10. INSTALL RIP RAP ON FABRIC AT STORM SEWER OUTFAL.
11. INSTALL INLET GRATE SCREENS ON ALL NEW INLETS.
12. FINAL GRADE SLOPES AND TOPSOIL CRITICAL SLOPES; VEGETATE AND MULCH ALL DISTURBED AREAS.
13. INSTALL BASE COURSE OF ASPHALT/ POROUS ASPHALT PAVEMENT PER MANUFACTURE SPECIFICATIONS.
14. ALL EROSION CONTROL PRACTICES WILL BE INSPECTED WEEKLY AND AFTER RAINFALL, NEEDED REPAIRS WILL BE PERFORMED IMMEDIATELY.
15. AFTER SITE IS STABILIZED, REMOVE ALL TEMPORARY MEASURES AND VEGETATE THE DISTURBED AREAS.
16. ESTIMATED TIME BEFORE FINAL STABILIZATION – 6 MONTHS.

MAINTENANCE PLAN

1. ALL EROSION AND SEDIMENT CONTROL PRACTICES WILL BE CHECKED FOR STABILITY AND OPERATION FOLLOWING EVERY RUNOFF–PRODUCTION RAINFALL BUT IN NO CASE LESS THAN ONCE EVERY WEEK. ANY NEEDED REPAIRS WILL BE MADE IMMEDIATELY TO MAINTAIN ALL PRACTICES AS DESIGNED.

2. SEDIMENT WILL BE REMOVED FROM BEHIND THE SILT FENCE WHEN IT BECOMES ABOUT 0.5 FT. DEEP AT THE FENCE. THE SILT FENCE WILL BE REPAIRED AS NECESSARY TO MAINTAIN A BARRIER.

3. ALL SEEDED AREAS WILL BE FERTILIZED, RESEEDED AS NECESSARY, AND MULCHED TO MAINTAIN A VIGOROUS, DENSE VEGETATIVE COVER.

4. ANY SEDIMENT REACHING A PUBLIC OR PRIVATE ROAD SHALL BE REMOVED BY STREET CLEANING BEFORE THE END OF EACH DAY.

CITY CENTER JUNCTION

MADISON, WI

CJE NO.: 07I2R4

MAY 29, 2007

EROSION CONTROL PLAN

C3.0

SHEET 3 OF 4

CJ engineering
civil design and consulting
13005 W. Bluemound Rd.
Suite 250
Brookfield, WI 53005
PH. (262) 641-2848
FAX (262) 641-2871
www.cj-engineering.com

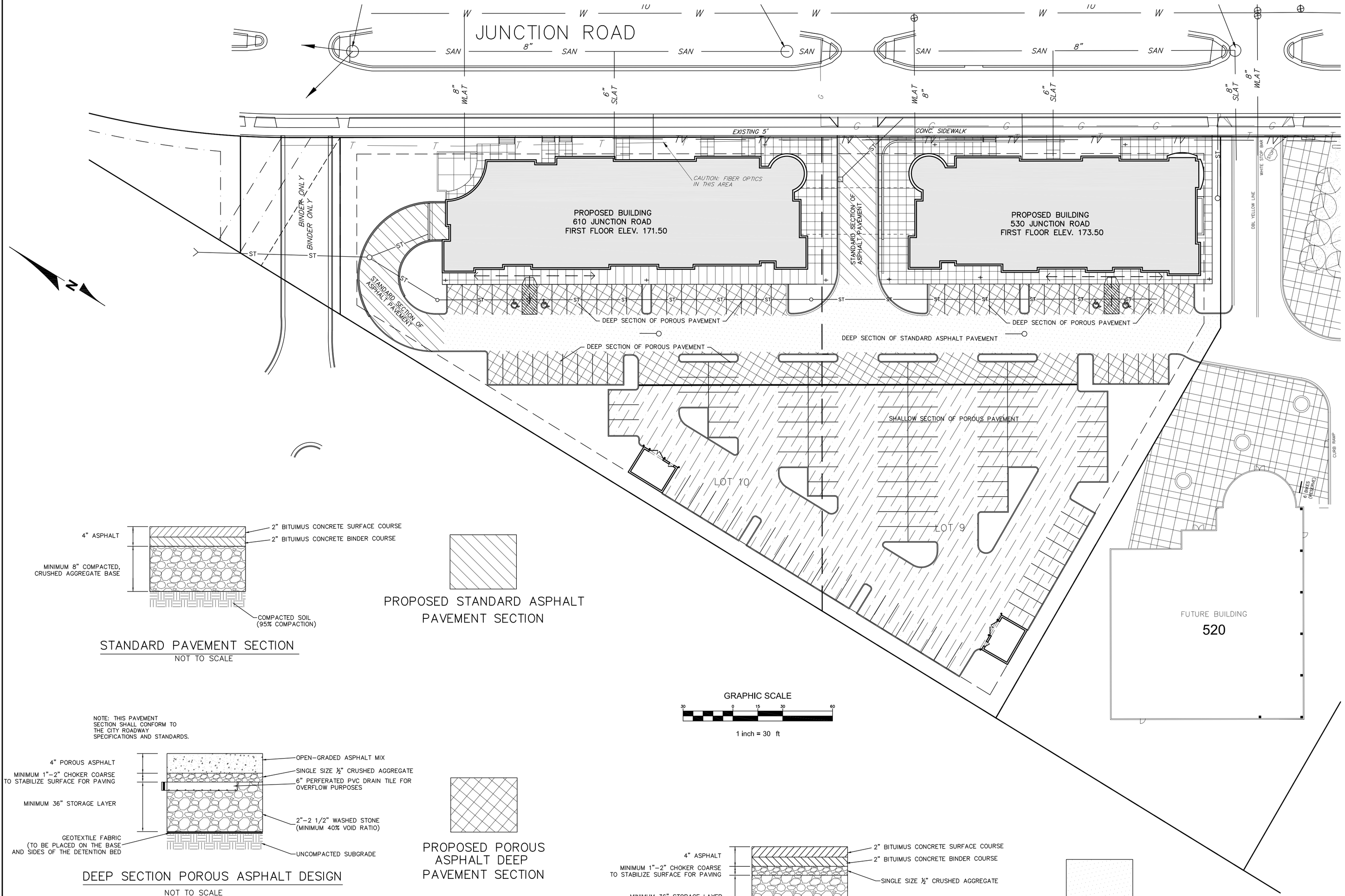

STANDARD PAVEMENT SECTION
NOT TO SCALE

PROPOSED STANDARD ASPHALT PAVEMENT SECTION

NOTE: THIS PAVEMENT SECTION SHALL CONFORM TO THE CITY ROADWAY SPECIFICATIONS AND STANDARDS.

DEEP SECTION POROUS ASPHALT DESIGN
NOT TO SCALE

PROPOSED POROUS ASPHALT DEEP PAVEMENT SECTION

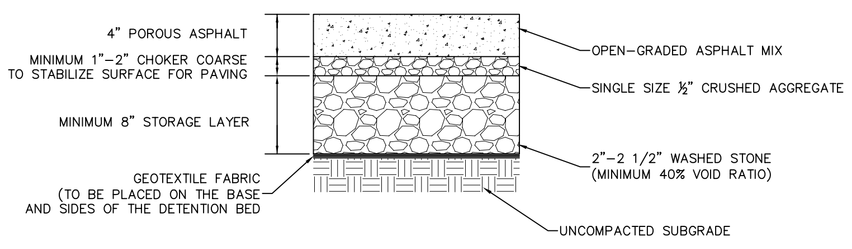

SHALLOW SECTION POROUS ASPHALT DESIGN
NOT TO SCALE

PROPOSED POROUS ASPHALT SHALLOW PAVEMENT SECTION

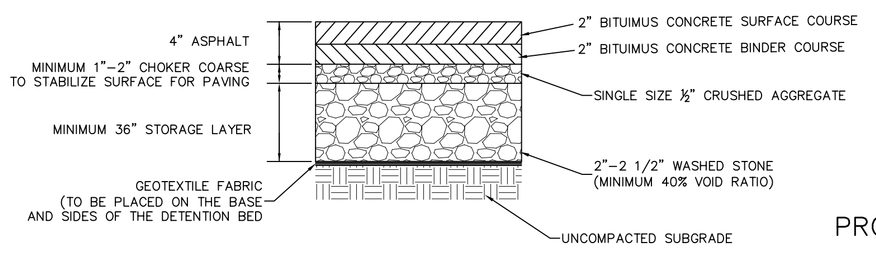

STANDARD PAVEMENT SECTION W/ DEEP SECTION BASE
NOT TO SCALE

PROPOSED STANDARD ASPHALT PAVEMENT SECTION W/ DEEP SECTION BASE

CITY CENTER JUNCTION
MADISON, WI

CJE NO.: 0712R4
MAY 29, 2007

SITE PAVING PLAN

C4.0
SHEET 4 OF 4

3 SOUTH ELEVATION

SCALE: 1/8" = 1'-0"

2 NORTH ELEVATION

SCALE: 1/8" = 1'-0"

4 WEST ELEVATION

SCALE: 1/8" = 1'-0"

530 CITY CENTER JUNCTION

WELMAN ARCHITECTS INC

DATE: 11-31-2006

JOB #: 26098

© COPYRIGHT BY WELMAN ARCHITECTS INC.

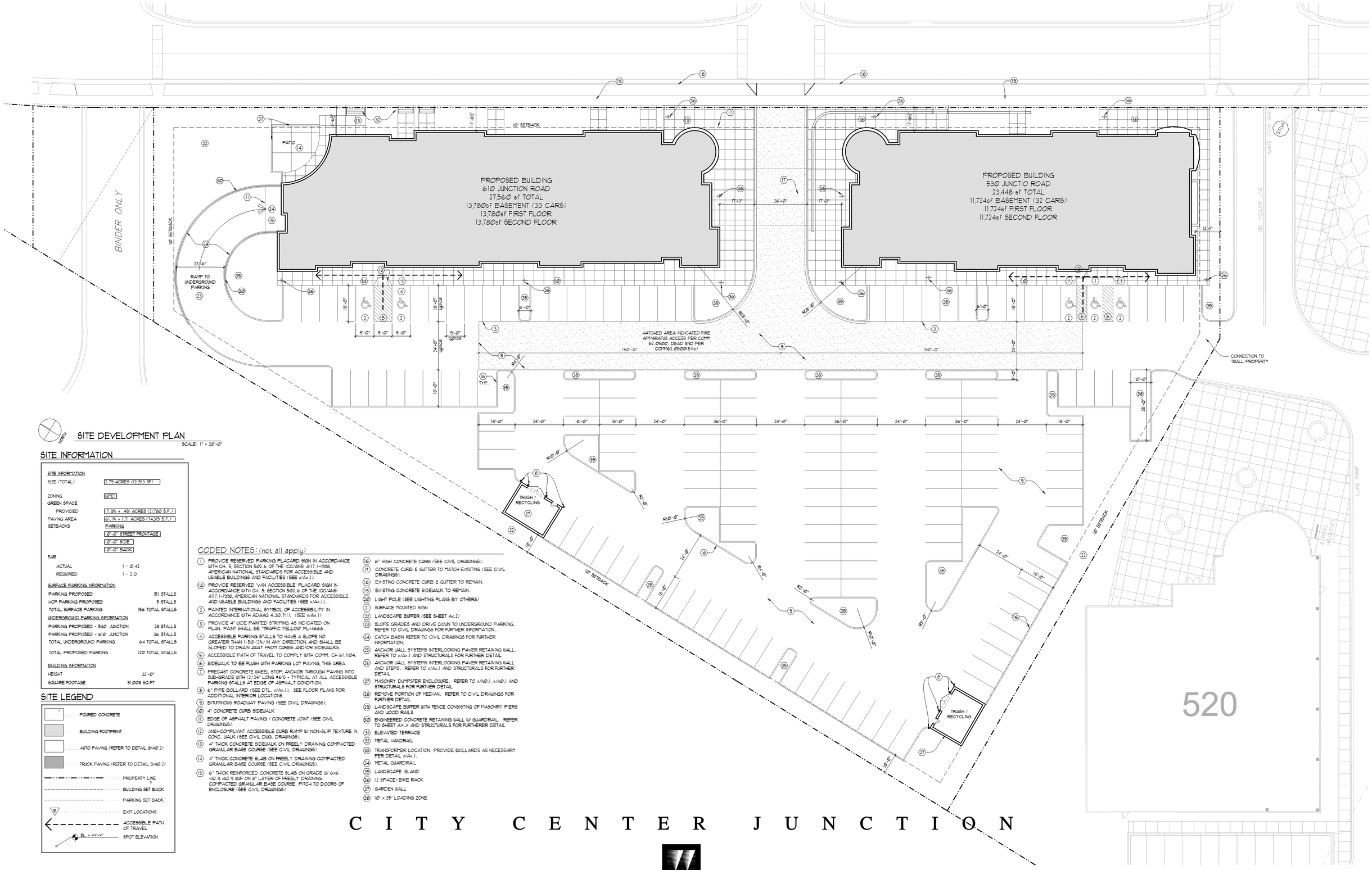

NORTH

SITE DEVELOPMENT PLAN

SCALE: 1" = 20'-0"

SITE INFORMATION

SITE INFORMATION	
SIZE (TOTAL)	2.75 ACRES (121,513 SF)
ZONING	GPD
GREEN SPACE	
PROVIDED	17.9% = .491 ACRES (21,780 S.F.)
PAVING AREA	61.1% = 1.71 ACRES (74,313 S.F.)
SETBACKS	PARKING
	10'-0" STREET FRONTAGE
	10'-0" SIDE
	10'-0" BACK
FAR	
ACTUAL	1 : 0.42
REQUIRED	1 : 2.0
SURFACE PARKING INFORMATION	
PARKING PROPOSED	151 STALLS
HCP PARKING PROPOSED	5 STALLS
TOTAL SURFACE PARKING	156 TOTAL STALLS
UNDERGROUND PARKING INFORMATION	
PARKING PROPOSED - 530 JUNCTION	28 STALLS
PARKING PROPOSED - 610 JUNCTION	36 STALLS
TOTAL UNDERGROUND PARKING	64 TOTAL STALLS
TOTAL PROPOSED PARKING	220 TOTAL STALLS
BUILDING INFORMATION	
HEIGHT	32'-0"
SQUARE FOOTAGE	51,008 SQ.FT

SITE LEGEND

- POURED CONCRETE
- BUILDING FOOTPRINT
- AUTO PAVING (REFER TO DETAIL 8/A0.2)
- TRUCK PAVING (REFER TO DETAIL 9/A0.2)
- PROPERTY LINE
- BUILDING SET BACK
- PARKING SET BACK
- EXIT LOCATIONS
- ACCESSIBLE PATH OF TRAVEL
- SPOT ELEVATION

CODED NOTES: (not all apply)

1. PROVIDE RESERVED PARKING PLACARD SIGN IN ACCORDANCE WITH CH. 5, SECTION 502.6 OF THE ICC/ANSI A117.1-1998, AMERICAN NATIONAL STANDARDS FOR ACCESSIBLE AND USABLE BUILDINGS AND FACILITIES (SEE x/Ax.1).
1A. PROVIDE RESERVED 'VAN ACCESSIBLE' PLACARD SIGN IN ACCORDANCE WITH CH. 5, SECTION 502.6 OF THE ICC/ANSI A117.1-1998, AMERICAN NATIONAL STANDARDS FOR ACCESSIBLE AND USABLE BUILDINGS AND FACILITIES (SEE x/Ax.1).
2. PAINTED INTERNATIONAL SYMBOL OF ACCESSIBILITY IN ACCORDANCE WITH ADAAG 4.30.7(1). (SEE x/Ax.1)
3. PROVIDE 4" WIDE PAINTED STRIPING AS INDICATED ON PLAN. PAINT SHALL BE 'TRAFFIC YELLOW' PL-4666.
4. ACCESSIBLE PARKING STALLS TO HAVE A SLOPE NO GREATER THAN 1:50 (2%) IN ANY DIRECTION AND SHALL BE SLOPED TO DRAIN AWAY FROM CURBS AND/OR SIDEWALKS.
5. ACCESSIBLE PATH OF TRAVEL TO COMPLY WITH COMM. CH 61.1104.
6. SIDEWALK TO BE FLUSH WITH PARKING LOT PAVING, THIS AREA.
7. PRECAST CONCRETE WHEEL STOP, ANCHOR THROUGH PAVING INTO SUB-GRADE WITH (2) 24" LONG #6'S - TYPICAL AT ALL ACCESSIBLE PARKING STALLS AT EDGE OF ASPHALT CONDITION.
8. 6" PIPE BOLLARD (SEE DTL. x/Ax.1). SEE FLOOR PLANS FOR ADDITIONAL INTERIOR LOCATIONS.
9. BITUMINOUS ROADWAY PAVING (SEE CIVIL DRAWINGS).
10. 4" CONCRETE CURB SIDEWALK
11. EDGE OF ASPHALT PAVING / CONCRETE JOINT (SEE CIVIL DRAWINGS).
12. ANSI-COMPLIANT ACCESSIBLE CURB RAMP W/ NON-SLIP TEXTURE IN CONC. WALK (SEE CIVIL DWG. DRAWINGS).
13. 4" THICK CONCRETE SIDEWALK ON FREELY DRAINING COMPACTED GRANULAR BASE COURSE (SEE CIVIL DRAWINGS).
14. 4" THICK CONCRETE SLAB ON FREELY DRAINING COMPACTED GRANULAR BASE COURSE (SEE CIVIL DRAWINGS).
15. 6" THICK REINFORCED CONCRETE SLAB ON GRADE W/ 6x6 -W2.9 xW2.9 WWF ON 8" LAYER OF FREELY DRAINING COMPACTED GRANULAR BASE COURSE. FITCH TO DOORS OF ENCLOSURE (SEE CIVIL DRAWINGS).
16. 6" HIGH CONCRETE CURB (SEE CIVIL DRAWINGS).
17. CONCRETE CURB & GUTTER TO MATCH EXISTING (SEE CIVIL DRAWINGS).
18. EXISTING CONCRETE CURB & GUTTER TO REMAIN.
19. EXISTING CONCRETE SIDEWALK TO REMAIN.
20. LIGHT POLE (SEE LIGHTING PLANS BY OTHERS)
21. SURFACE MOUNTED SIGN
22. LANDSCAPE BUFFER (SEE SHEET Ax.2)
23. SLOPE GRADES AND DRIVE DOWN TO UNDERGROUND PARKING. REFER TO CIVIL DRAWINGS FOR FURTHER INFORMATION.
24. CATCH BASIN REFER TO CIVIL DRAWINGS FOR FURTHER INFORMATION.
25. ANCHOR WALL SYSTEMS INTERLOCKING PAVER RETAINING WALL. REFER TO x/Ax.1 AND STRUCTURALS FOR FURTHER DETAIL
26. ANCHOR WALL SYSTEMS INTERLOCKING PAVER RETAINING WALL AND STEPS. REFER TO x/Ax.1 AND STRUCTURALS FOR FURTHER DETAIL
27. MASONRY DUMPSTER ENCLOSURE. REFER TO x/A0.1, x/A0.1 AND STRUCTURALS FOR FURTHER DETAIL
28. REMOVE PORTION OF MEDIAN. REFER TO CIVIL DRAWINGS FOR FURTHER DETAIL
29. LANDSCAPE BUFFER WITH FENCE CONSISTING OF MASONRY PIERS AND WOOD RAILS
30. ENGINEERED CONCRETE RETAINING WALL W/ GUARDRAIL. REFER TO SHEET Ax.X AND STRUCTURALS FOR FURTHERER DETAIL
31. ELEVATED TERRACE
32. METAL HANDRAIL
33. TRANSFORMER LOCATION. PROVIDE BOLLARDS AS NECESSARY PER DETAIL x/Ax.1.
34. METAL GUARDRAIL
35. LANDSCAPE ISLAND
36. (2 SPACE) BIKE RACK
37. GARDEN WALL
38. 10' x 35' LOADING ZONE

C I T Y C E N T E R J U N C T I O N

WELMAN ARCHITECTS INC

DATE: 04-18-2007
JOB #: 26098

© COPYRIGHT BY WELMAN ARCHITECTS INC.

SITE DEVELOPMENT PLAN

SCALE: 1" = 20'-0"

SITE INFORMATION

SITE INFORMATION	
SIZE (TOTAL)	2.78 ACRES (121,513 SF)
ZONING	GPD
GREEN SPACE	
PROVIDED	17.9% = .49 ACRES (21,780 S.F.)
PAVING AREA	61.1% = 1.71 ACRES (74,315 S.F.)
SETBACKS	
PARKING	
	10'-0" STREET FRONTAGE
	10'-0" SIDE
	10'-0" BACK
FAR	
ACTUAL	1 : 0.42
REQUIRED	1 : 2.0
SURFACE PARKING INFORMATION	
PARKING PROPOSED	151 STALLS
HCP PARKING PROPOSED	5 STALLS
TOTAL SURFACE PARKING	156 TOTAL STALLS
UNDERGROUND PARKING INFORMATION	
PARKING PROPOSED - 530 JUNCTION	28 STALLS
PARKING PROPOSED - 610 JUNCTION	36 STALLS
TOTAL UNDERGROUND PARKING	64 TOTAL STALLS
TOTAL PROPOSED PARKING	220 TOTAL STALLS
BUILDING INFORMATION	
HEIGHT	32'-0"
SQUARE FOOTAGE	50,522 SQ.FT

SITE LEGEND

- POURED CONCRETE
- BUILDING FOOTPRINT
- AUTO PAVING (REFER TO DETAIL 8/A0.2)
- TRUCK PAVING (REFER TO DETAIL 9/A0.2)
- PROPERTY LINE
- BUILDING SET BACK
- PARKING SET BACK
- EXIT LOCATIONS
- ACCESSIBLE PATH OF TRAVEL
- EL. = XX'-X" SPOT ELEVATION

CODED NOTES: (not all apply)

1. PROVIDE RESERVED PARKING PLACARD SIGN IN ACCORDANCE WITH CH. 5, SECTION 502.6 OF THE ICC/ANSI A117.1-1998, AMERICAN NATIONAL STANDARDS FOR ACCESSIBLE AND USABLE BUILDINGS AND FACILITIES (SEE x/Ax.1).
1A. PROVIDE RESERVED VAN ACCESSIBLE PLACARD SIGN IN ACCORDANCE WITH CH. 5, SECTION 502.6 OF THE ICC/ANSI A117.1-1998, AMERICAN NATIONAL STANDARDS FOR ACCESSIBLE AND USABLE BUILDINGS AND FACILITIES (SEE x/Ax.1).
2. PAINTED INTERNATIONAL SYMBOL OF ACCESSIBILITY IN ACCORDANCE WITH ADAAG 4.30.7(1). (SEE x/Ax.1)
3. PROVIDE 4" WIDE PAINTED STRIPING AS INDICATED ON PLAN. PAINT SHALL BE "TRAFFIC YELLOW" FL-4666.
4. ACCESSIBLE PARKING STALLS TO HAVE A SLOPE NO GREATER THAN 1:50 (2%) IN ANY DIRECTION, AND SHALL BE SLOPED TO DRAIN AWAY FROM CURBS AND/OR SIDEWALKS.
5. ACCESSIBLE PATH OF TRAVEL TO COMPLY WITH COMM. CH 61.1104.
6. SIDEWALK TO BE FLUSH WITH PARKING LOT PAVING, THIS AREA.
7. PRECAST CONCRETE WHEEL STOP, ANCHOR THROUGH PAVING INTO SUB-GRADE WITH (2) 24" LONG #6'S - TYPICAL AT ALL ACCESSIBLE PARKING STALLS AT EDGE OF ASPHALT CONDITION.
8. 6" PIPE BOLLARD (SEE DTL. x/Ax.1). SEE FLOOR PLANS FOR ADDITIONAL INTERIOR LOCATIONS.
9. BITUMINOUS ROADWAY PAVING (SEE CIVIL DRAWINGS).
10. 4" CONCRETE CURB SIDEWALK
11. EDGE OF ASPHALT PAVING / CONCRETE JOINT (SEE CIVIL DRAWINGS).
12. ANSI-COMPLIANT ACCESSIBLE CURB RAMP W/ NON-SLIP TEXTURE IN CONC. WALK (SEE CIVIL DWG. DRAWINGS).
13. 4" THICK CONCRETE SIDEWALK ON FREELY DRAINING COMPACTED GRANULAR BASE COURSE (SEE CIVIL DRAWINGS).
14. 4" THICK CONCRETE SLAB ON FREELY DRAINING COMPACTED GRANULAR BASE COURSE (SEE CIVIL DRAWINGS).
15. 6" THICK REINFORCED CONCRETE SLAB ON GRADE W/ 6x6 -W2.9 x W2.9 WWF ON 8" LAYER OF FREELY DRAINING COMPACTED GRANULAR BASE COURSE. FITCH TO DOORS OF ENCLOSURE (SEE CIVIL DRAWINGS).
16. 6" HIGH CONCRETE CURB (SEE CIVIL DRAWINGS).
17. CONCRETE CURB & GUTTER TO MATCH EXISTING (SEE CIVIL DRAWINGS).
18. EXISTING CONCRETE CURB & GUTTER TO REMAIN.
19. EXISTING CONCRETE SIDEWALK TO REMAIN.
20. LIGHT POLE (SEE LIGHTING PLANS BY OTHERS)
21. SURFACE MOUNTED SIGN
22. LANDSCAPE BUFFER (SEE SHEET Ax.2)
23. SLOPE GRADES AND DRIVE DOWN TO UNDERGROUND PARKING. REFER TO CIVIL DRAWINGS FOR FURTHER INFORMATION.
24. CATCH BASIN REFER TO CIVIL DRAWINGS FOR FURTHER INFORMATION.
25. ANCHOR WALL SYSTEMS INTERLOCKING PAVER RETAINING WALL. REFER TO x/Ax.1 AND STRUCTURALS FOR FURTHER DETAIL.
26. ANCHOR WALL SYSTEMS INTERLOCKING PAVER RETAINING WALL AND STEPS. REFER TO x/Ax.1 AND STRUCTURALS FOR FURTHER DETAIL
27. MASONRY DUMPSTER ENCLOSURE. REFER TO x/A0.1, x/A0.1 AND STRUCTURALS FOR FURTHER DETAIL
28. REMOVE PORTION OF MEDIAN. REFER TO CIVIL DRAWINGS FOR FURTHER DETAIL
29. LANDSCAPE BUFFER WITH FENCE CONSISTING OF MASONRY PIERS AND WOOD RAILS
30. ENGINEERED CONCRETE RETAINING WALL W/ GUARDRAIL. REFER TO SHEET AX.X AND STRUCTURALS FOR FURTHERER DETAIL
31. ELEVATED TERRACE
32. METAL HANDRAIL
33. TRANSFORMER LOCATION. PROVIDE BOLLARDS AS NECESSARY PER DETAIL x/Ax.1.
34. METAL GUARDRAIL
35. LANDSCAPE ISLAND
36. (2 SPACE) BIKE RACK
37. GARDEN WALL
38. 10' x 35' LOADING ZONE

C I T Y C E N T E R J U N C T I O N

WELMAN ARCHITECTS INC

DATE: 04-18-2007
JOB #: 26098

© COPYRIGHT BY WELMAN ARCHITECTS INC.

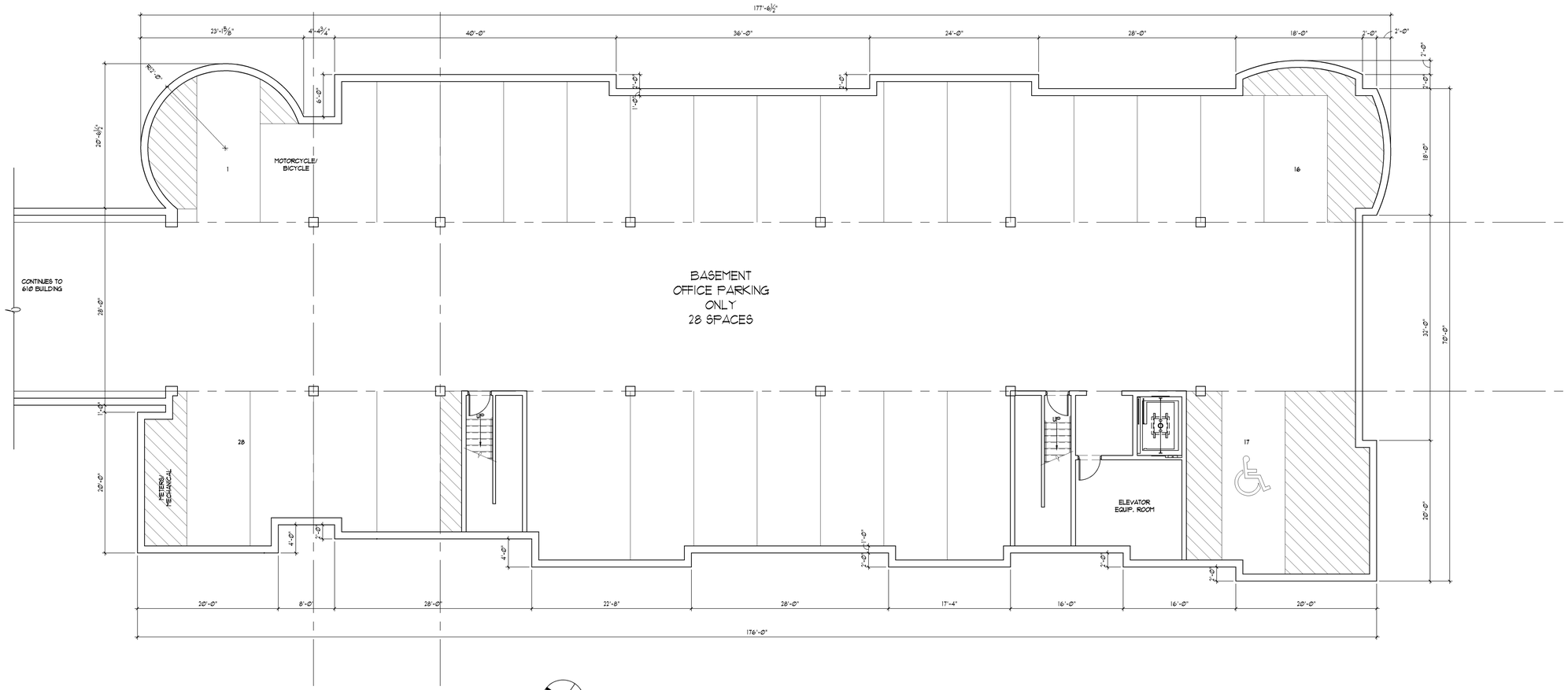

1 BASEMENT PLAN

SCALE: 1/8" = 1'-0"

530 CITY CENTER JUNCTION

WELMAN
ARCHITECTS
I N C

DATE: 11-31-2006
JOB #: 26098

© COPYRIGHT BY WELMAN ARCHITECTS INC.

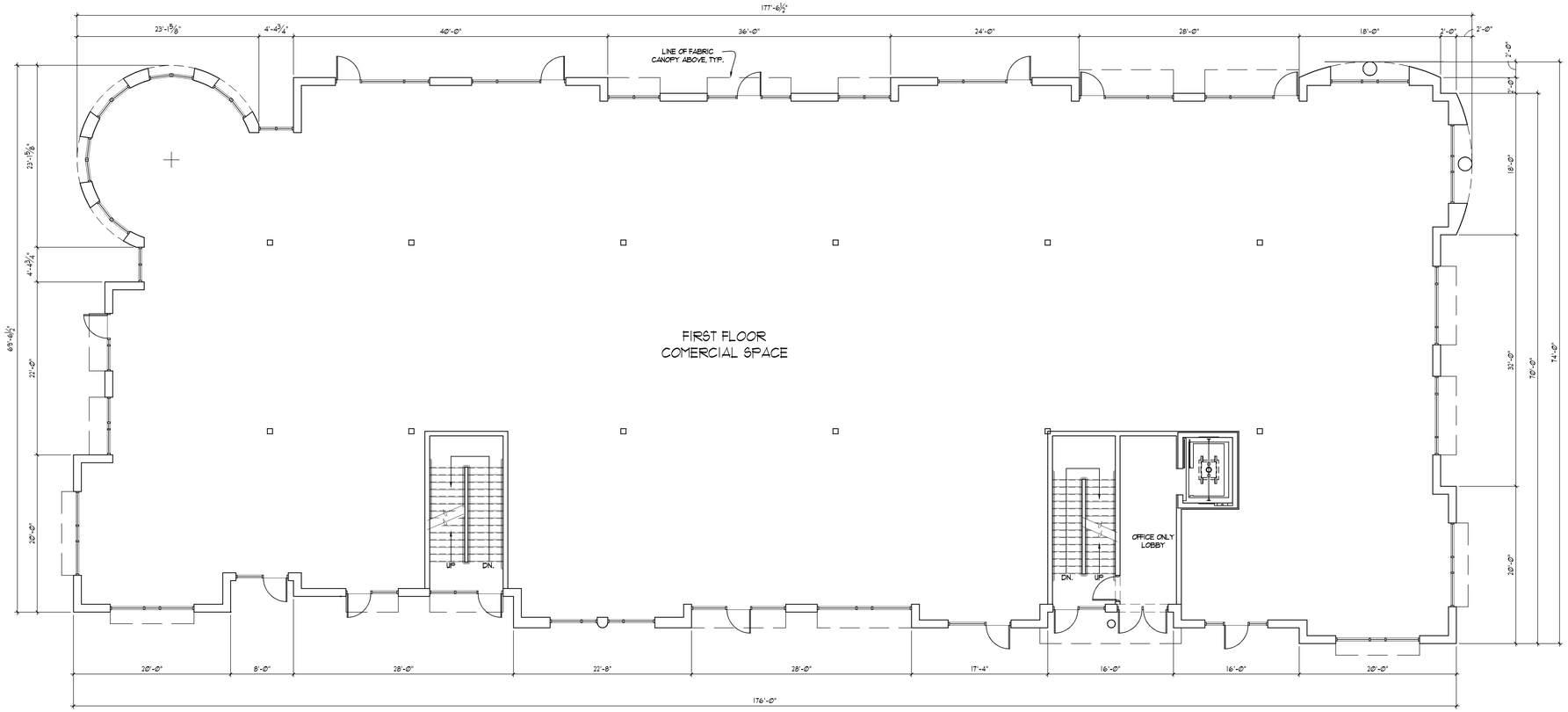

1 FIRST FLOOR PLAN

SCALE: 1/8" = 1'-0"

5 3 0 C I T Y C E N T E R J U N C T I O N

WELMAN ARCHITECTS INC

DATE: 11-31-2006
JOB #: 26098

© COPYRIGHT BY WELMAN ARCHITECTS INC.

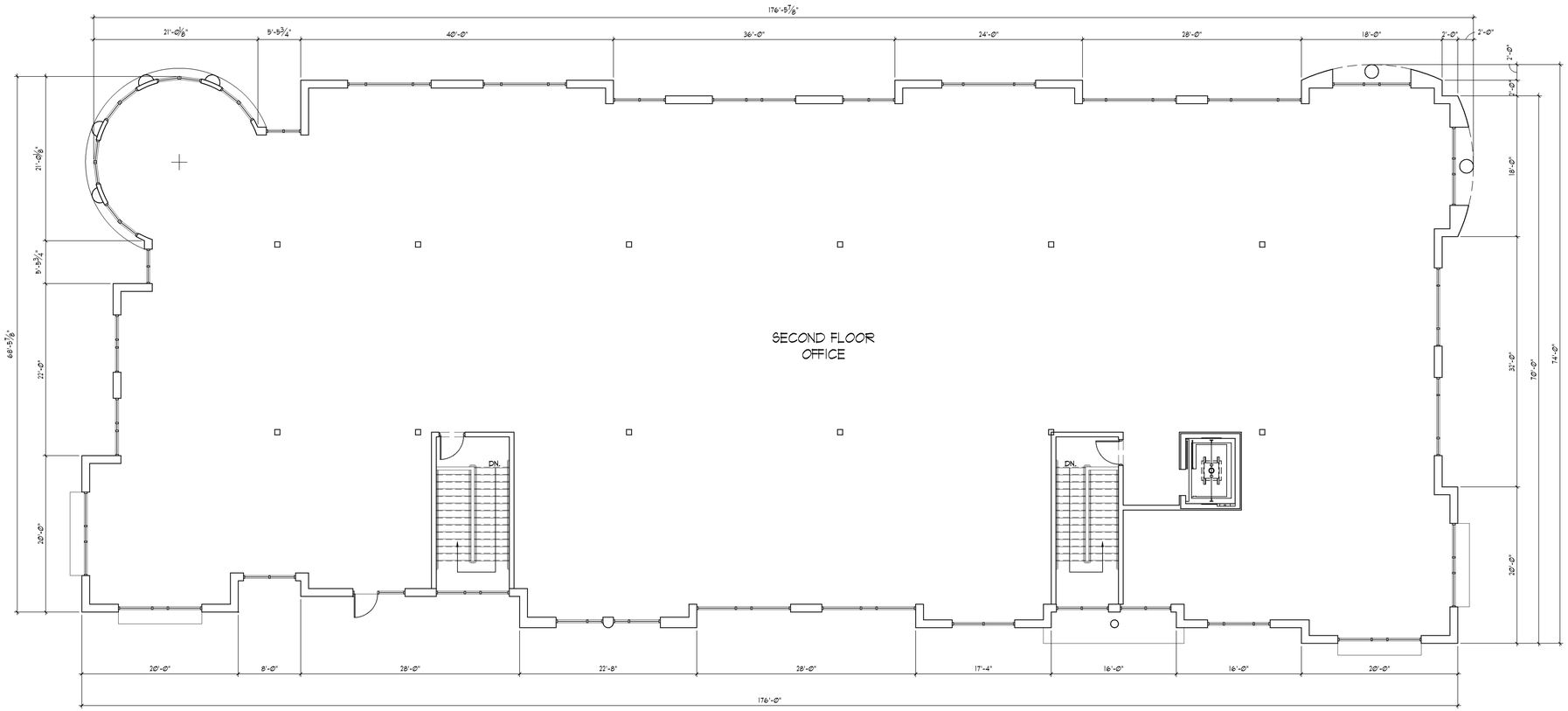

1 SECOND FLOOR PLAN

SCALE: 1/8" = 1'-0"

NORTH

5 3 0 C I T Y C E N T E R J U N C T I O N

WELMAN
ARCHITECTS
I N C

DATE: 11-31-2006
JOB #: 26098

© COPYRIGHT BY WELMAN ARCHITECTS INC.

3 SOUTH ELEVATION

SCALE: 1/8" = 1'-0"

2 NORTH ELEVATION

SCALE: 1/8" = 1'-0"

4 WEST ELEVATION

SCALE: 1/8" = 1'-0"

530 CITY CENTER JUNCTION

WELMAN ARCHITECTS INC

DATE: 11-31-2006

JOB #: 26098

© COPYRIGHT BY WELMAN ARCHITECTS INC.

1 EAST ELEVATION

SCALE: 1/8" = 1'-0"

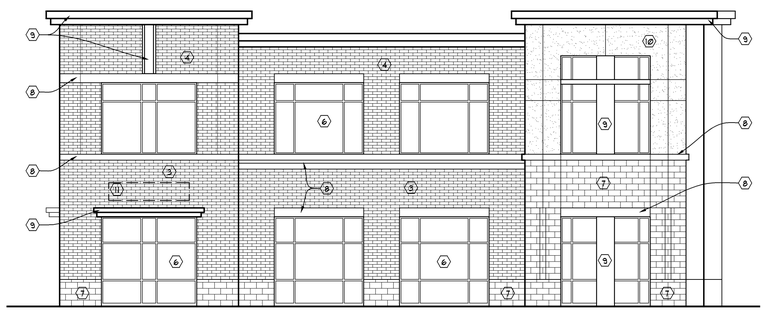

3 SOUTH ELEVATION

SCALE: 1/8" = 1'-0"

ELEVATION CODED NOTES:

1. METAL PANEL #1
2. METAL PANEL #2
3. BRICK #1
4. BRICK #2
5. BRICK #3
6. ANNOD. ALUMINUM STOREFRONT SYSTEM TYPICAL
7. PRECAST STONE
8. PRECAST BAND/LINTEL
9. METAL SOFFIT, FASCIA, AND TRIM
10. EIFS
11. PROPOSED SIGNAGE AREA

EXTERIOR ELEVATION NOTES

1. CONTRACTOR TO FIELD VERIFY ALL ROUGH OPENINGS.
2. WINDOW SYSTEM TO BE EXTERIOR GLAZED.

2 NORTH ELEVATION

SCALE: 1/8" = 1'-0"

4 WEST ELEVATION

SCALE: 1/8" = 1'-0"

530 CITY CENTER JUNCTION

WELMAN ARCHITECTS INC

DATE: 11-31-2006

JOB #: 26098

© COPYRIGHT BY WELMAN ARCHITECTS INC.

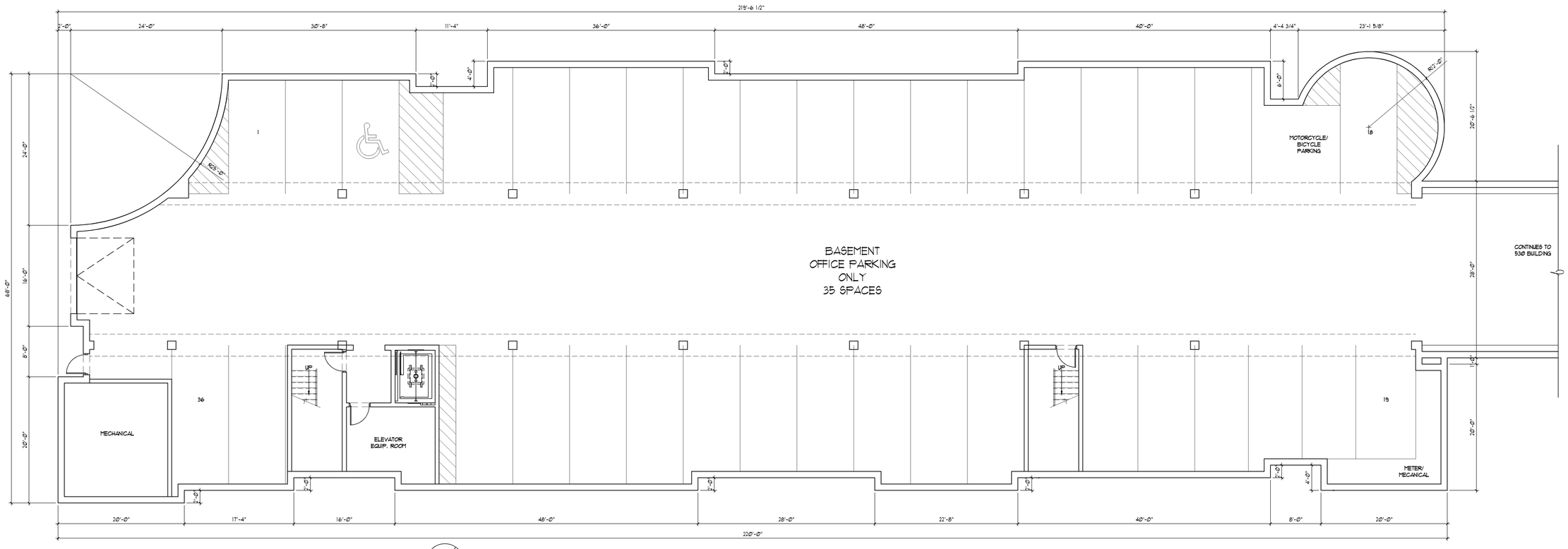

1 BASEMENT PLAN

SCALE: 1/8" = 1'-0"

NORTH

610 CITY CENTER JUNCTION

WELMAN
ARCHITECTS
I N C

DATE: 11-31-2006
JOB #: 26098

© COPYRIGHT BY WELMAN ARCHITECTS INC.

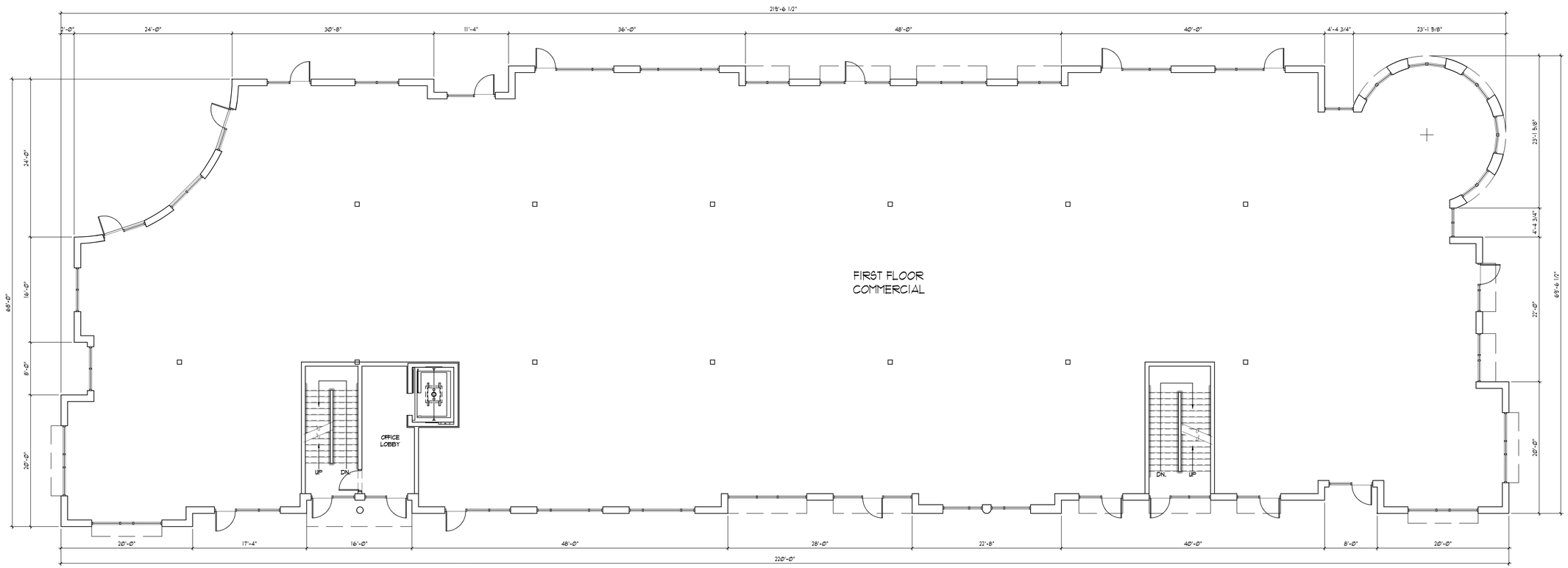

1 FIRST FLOOR PLAN

SCALE: 1/8" = 1'-0"

6 1 0 C I T Y C E N T E R J U N C T I O N

WELMAN
ARCHITECTS
I N C

DATE: 11-31-2006
JOB #: 26098

© COPYRIGHT BY WELMAN ARCHITECTS INC.

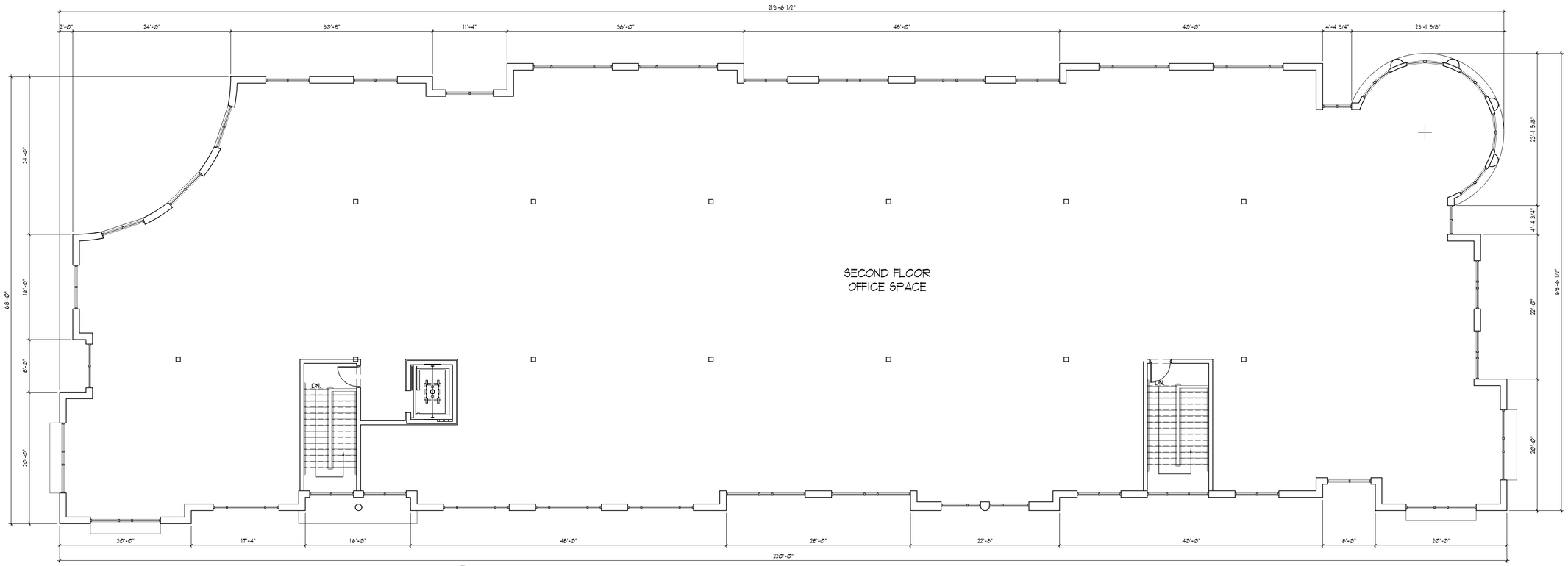

1 SECOND FLOOR PLAN

SCALE: 1/8" = 1'-0"

NORTH

610 CITY CENTER JUNCTION

WELMAN ARCHITECTS INC

DATE: 11-31-2006

JOB #: 26098

© COPYRIGHT BY WELMAN ARCHITECTS INC.

1 EAST ELEVATION

SCALE: 1/8" = 1'-0"

3 SOUTH ELEVATION

SCALE: 1/8" = 1'-0"

2 NORTH ELEVATION

SCALE: 1/8" = 1'-0"

4 WEST ELEVATION

SCALE: 1/8" = 1'-0"

610 CITY CENTER JUNCTION

WELMAN ARCHITECTS INC

DATE: 11-31-2006

JOB: #: 26098

© COPYRIGHT BY WELMAN ARCHITECTS INC.

1 EAST ELEVATION

SCALE: 1/8" = 1'-0"

3 SOUTH ELEVATION

SCALE: 1/8" = 1'-0"

ELEVATION CODED NOTES:

1. METAL PANEL #1
2. METAL PANEL #2
3. BRICK #1
4. BRICK #2
5. BRICK #3
6. ANNOD. ALUMINUM STOREFRONT SYSTEM TYPICAL
7. PRECAST STONE
8. PRECAST BAND/LINTEL
9. METAL SOFFIT, FASCIA, AND TRIM
10. EIFS
11. PROPOSED SIGNAGE AREA
12. METAL RAILING

EXTERIOR ELEVATION NOTES

1. CONTRACTOR TO FIELD VERIFY ALL ROUGH OPENINGS.
2. WINDOW SYSTEM TO BE EXTERIOR GLAZED.

2 NORTH ELEVATION

SCALE: 1/8" = 1'-0"

4 WEST ELEVATION

SCALE: 1/8" = 1'-0"

6 1 0 C I T Y C E N T E R J U N C T I O N

WELMAN ARCHITECTS INC

DATE: 11-31-2006

JOB #: 26098

© COPYRIGHT BY WELMAN ARCHITECTS INC.